PROPOSED RESTAURANT DEVELOPMENT AT THE PROMENADE SHOPS AT EVERGREEN WALK

INLAND WETLANDS, WATERCOURSES AND CONSERVATION APPLICATION

601 EVERGREEN WAY

MAP 27, BLOCK 15, UNIT 2

TOWN OF SOUTH WINDSOR, HARTFORD COUNTY, CONNECTICUT

DRAWING INDEX

NUMBER	DRAWING TITLE	DATE	LAST REVISED
CS001	COVER SHEET	08/25/2021	
VL101	ALTA/NSPS LAND TITLE SURVEY	02/08/2021	08/25/2021
VL102	ALTA/NSPS LAND TITLE SURVEY	02/08/2021	08/25/2021
VL103	ALTA/NSPS LAND TITLE SURVEY	02/08/2021	08/25/2021
CS002	MASTER LEGEND & NOTES	08/25/2021	
CS100	KEY MAP	08/25/2021	
CS101	SITE PLAN	08/25/2021	
CS501	SITE DETAILS I	08/25/2021	
CS502	SITE DETAILS II	08/25/2021	
CG101	GRADING & DRAINAGE PLAN	08/25/2021	
CG501	GRADING & DRAINAGE DETAILS I	08/25/2021	
CU101	UTILITY PLAN	08/25/2021	
CU501	UTILITY DETAILS I	08/25/2021	
CU502	UTILITY DETAILS II	08/25/2021	
CE101	SOIL EROSION AND SEDIMENT CONTROL PLAN	08/25/2021	
CE501	SOIL EROSION AND SEDIMENT CONTROL DETAILS I	08/25/2021	
LP101	LANDSCAPE PLANTING PLAN	08/25/2021	
LP501	PLANTING DETAILS	08/25/2021	
LL101	LANDSCAPE LIGHTING PLAN	08/25/2021	
LL501	LIGHTING DETAILS	08/25/2021	

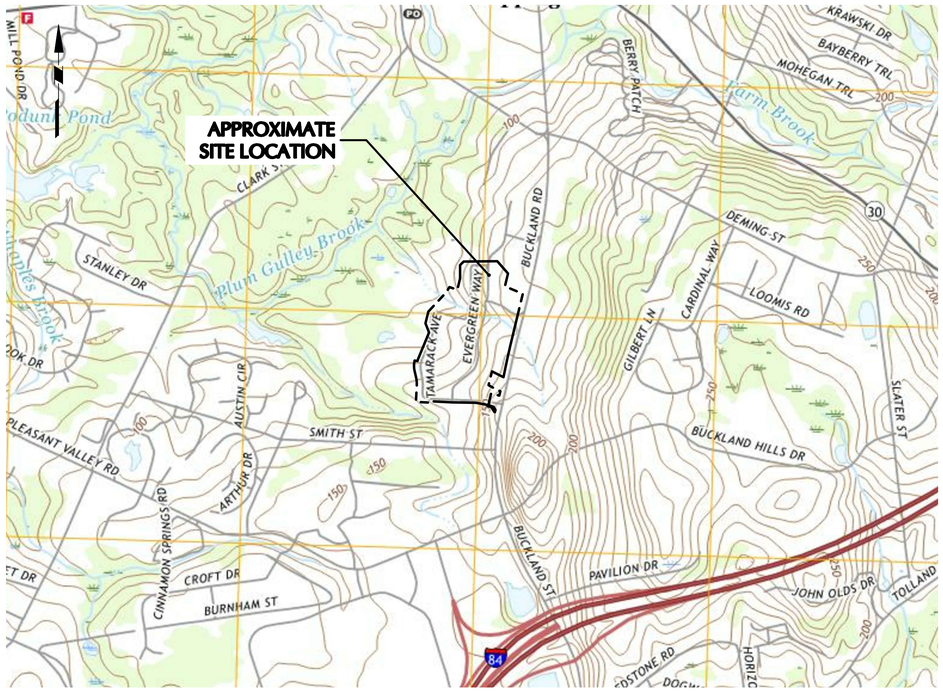

MAP REFERENCE: USGS MANCHESTER QUADRANGLE (7.5-MINUTE SERIES)

LOCATION MAP

SCALE: 1" = 1000'

ABUTTING PROPERTY OWNERS

MAP	BLOCK	LOT	PROPERTY OWNER	PROPERTY LOCATION
20	40	0494	HOOD MARK J	494 CLARK STREET
20	40	0716	859 CLARK ST LLC	716 CLARK STREET
27	60	0075	BD ASSET CO 2 LLC	75 DEMING STREET
83	70	0302	HO-NG HIU HUNG & NG WEI-QUAN	302 SMITH STREET
15	30	0235	EVERGREEN WALK LLC	235 BUCKLAND ROAD
15	30	0179	CURRENT RESIDENT	179 BUCKLAND ROAD
15	30	0079	SOUTH WINDSOR TOWN OF	79 BUCKLAND ROAD
15	30	0325	SOUTH WINDSOR TOWN OF	325 BUCKLAND ROAD
15	30	0095	SOUTH WINDSOR TOWN OF	95 BUCKLAND ROAD
49	39	0101	LARSON BURTON L & JOAN D	101 KEBALO LANE
49	39	0102	CASCONE CAROL M	102 KEBALO LANE
49	39	0103	BERNETICH JOHN J & RACHEL	103 KEBALO LANE
49	39	0104	TULEJA DONALD T TR	104 KEBALO LANE
49	39	0201	PINEO DANNE TM	201 KEBALO LANE
49	39	0202	REID DEBRA M TR	202 KEBALO LANE
49	39	0203	GANTNER AMY	203 KEBALO LANE
49	39	0204	ARCELL STEVEN A	204 KEBALO LANE
49	39	0301	MOYNIHAN MARGARET M	301 KEBALO LANE
49	39	0302	BUNNELL RICHARD C & MARY E	302 KEBALO LANE
49	39	0303	ORTON FRANK D IV	303 KEBALO LANE
49	39	0304	ALLISON NANCY	304 KEBALO LANE
49	39	0501	RUDYK VERA	501 KEBALO LANE
49	39	0502	HARRINGTON CORDELIA T	502 KEBALO LANE
49	39	0503	STANLEY ROBERT F TR	503 KEBALO LANE
49	39	0601	GOWING ROBERTA J	601 KEBALO LANE
49	39	0602	GRAICERSTEIN RITA	602 KEBALO LANE
49	39	0603	ANDREWS FREDERICK C	603 KEBALO LANE
49	39	0604	TAMARKIN KARIN W	604 KEBALO LANE
49	39	0701	LEDBETTER WAYNE A & MARVA	701 KEBALO LANE
49	39	0702	PERRIN JANE F	702 KEBALO LANE
49	39	0703	RYAN RICHARD IRREVOCABLE TRUST L/U	703 KEBALO LANE
49	39	0704	SINCLAIR ANN W	704 KEBALO LANE
49	39	0705	SIBICKY ALEXANDER G & JOANNE W	705 KEBALO LANE
49	39	0706	SIMMONS DONALD R & LINDA M	706 KEBALO LANE
49	39	0000	CURRENT RESIDENT	KEBALO LANE
31	30	0101	CURRENT RESIDENT	101 EVERGREEN WAY
31	30	0201	CURRENT RESIDENT	201 EVERGREEN WAY
31	30	0301	CURRENT RESIDENT	301 EVERGREEN WAY
31	30	0401	CURRENT RESIDENT	401 EVERGREEN WAY
31	30	0501	CURRENT RESIDENT	501 EVERGREEN WAY
31	30	0601	CURRENT RESIDENT	601 EVERGREEN WAY
31	30	0801	CURRENT RESIDENT	801 EVERGREEN WAY
31	30	0800	CURRENT RESIDENT	800 EVERGREEN WAY
41	35	0100	CURRENT RESIDENT	100 HEMLOCK AVENUE
31	30	0500	CURRENT RESIDENT	500 EVERGREEN WAY
31	30	0400	CURRENT RESIDENT	400 EVERGREEN WAY
31	30	0300	CURRENT RESIDENT	300 EVERGREEN WAY
31	30	0200	CURRENT RESIDENT	200 EVERGREEN WAY
31	30	0100	CURRENT RESIDENT	100 EVERGREEN WAY
17	85	0100	REALTY INCOME PROPERTIES 21 LLC	100 CEDAR AVENUE
89	30	2800	EVERGEEN MEDICAL ASSOCIATES LLC	2800 TAMARACK AVENUE
89	30	0035	BUCKLAND ROAD RETAIL LLC	35 TAMARACK AVENUE
31	30	0000	EVERGEEN WALK LIFESTYLE CENTER LLC	EVERGREEN WAY
89	30	2400	EVERGREEN MEDICAL ASSOCIATES II LLC	2400 TAMARACK AVENUE
83	70	0244	BRIN PETER J & JENNIFER J	244 SMITH STREET
31	30	0000	CURRENT RESIDENT	EVERGREEN WALK
49	39	0000	CURRENT RESIDENT	KEBALO LANE
17	85	0100	CURRENT RESIDENT	100 CEDAR AVENUE
54	65	1000	RHD SOUTH WINDSOR LLC	1000 LONGLEAF LANE
54	65	1200	RHD SOUTH WINDSOR LLC	1200 LONGLEAF AVENUE
89	39	2701	AGM PROPERTIES LLC	2701 TAMARACK AVENUE
03	20	0050	SOUTH WINDSOR DEVELOPERS LLC	50 ANDREWS WAY
41	35	0900	CURRENT RESIDENT	900 HEMLOCK AVENUE
41	35	0900	EVERGREEN CROSSING RETIREMENT	900 HEMLOCK AVENUE
31	30	1000	CD-HRA (WINDSOR) LLC	1000 EVERGREEN WAY
83	70	0190	KF REALTY LLC	190 SMITH STREET
81	77	0010	COLCHESTER PROPERTIES LLC	10 SEDONA CIRCLE
83	70	0340	FRASER BRENDA J & BRUCE D	340 SMITH STREET
15	30	0151	EVERGREEN WALK LLC	151 BUCKLAND ROAD
20	40	0610	DUPRE BEVAN L	610 CLARK STREET
27	60	0083	TOSTARELLI STEPHANIE LAUREN	83 DEMING STREET
27	60	0047	SOUCY ARTHUR LIONEL TR	47 DEMING STREET
83	70	0260	EVERGREEN WALK LLC	260 SMITH STREET
83	70	0314	314 SMITH STREET ASSOCIATES LLC	314 SMITH STREET
83	70	0332	HAYES ROBERT J & BEVERLY E TRSTEES	332 SMITH STREET
20	40	0500	HOOD MARK J	500 CLARK STREET
15	30	0251	EVERGREEN WALK LLC	251 BUCKLAND ROAD
27	60	0067	GAINES MICHELLE L & JASON A	67 DEMING STREET
83	70	0140	JACQUES JEAN MARC	140 SMITH STREET
41	35	0200	KRISHRELTIC LLC	200 HEMLOCK AVENUE
20	40	0580	SMITH SHIRLEY W	580 CLARK STREET
27	60	0043	SOUCY ARTHUR L & KATE C	43 DEMING STREET

RELEASE DATES

DATE	ISSUED FOR
08/25/2021	INLAND WETLANDS, WATERCOURSES, AND CONSERVATION APPLICATION

APPLICANT
CHARTER REALTY & DEVELOPMENT CORP.
C/O KAREN JOHNSON
75 HOLLY HILL LANE, SUITE 305
GREENWICH, CT 06830
(617) 431-1091

OWNER
EVERGREEN WALK LIFESTYLE CENTER, LLC
C/O MYLES OSTROFF
501 EVERGREEN WAY, SUITE 503
SOUTH WINDSOR, CT 06074

LAND SURVEYOR, CIVIL ENGINEER, LANDSCAPE ARCHITECT
LANGAN ENGINEERING & ENVIRONMENTAL SERVICES, INC
C/O DAVID GAGNON
555 LONG WHARF DRIVE
NEW HAVEN, CT 06511
(203) 562-5771

SOIL SCIENTIST
ALL-POINTS TECHNOLOGY CORPORATION
C/O DEAN GUSTAFSON
567 VAUXHALL STREET EXTENSION
SUITE 311 WATERFORD, CT 06385
(860) 552-2033

FOR PERMITTING ONLY - NOT FOR CONSTRUCTION

LANGAN

PROJECT No. 140222801

ZONING REQUIREMENTS

ZONE: BUCKLAND ROAD GATEWAY DEVELOPMENT ZONE (GD)

ITEM	REQUIREMENT
MINIMUM LOT AREA	3 ACRES
MINIMUM FRONTAGE	200 FT.
MAXIMUM IMPERVIOUS COVERAGE	60%
MAXIMUM BUILDING HEIGHT	60 FT. (>125' FROM PUBLIC ROW) 30 FT. (<125' FROM PUBLIC ROW)
MAXIMUM BUILDING STORIES	4 STORIES (>125' FROM PUBLIC ROW) 2 STORIES (<125' FROM PUBLIC ROW)
MINIMUM FRONT SETBACK	65 FT.
MINIMUM REAR SETBACK	10 FT.
MINIMUM SIDE SETBACK	25 FT.

ZONING INFORMATION OBTAINED FROM THE TOWN OF SOUTH WINDSOR, ZONING REGULATIONS, DATED AUGUST 2, 2020

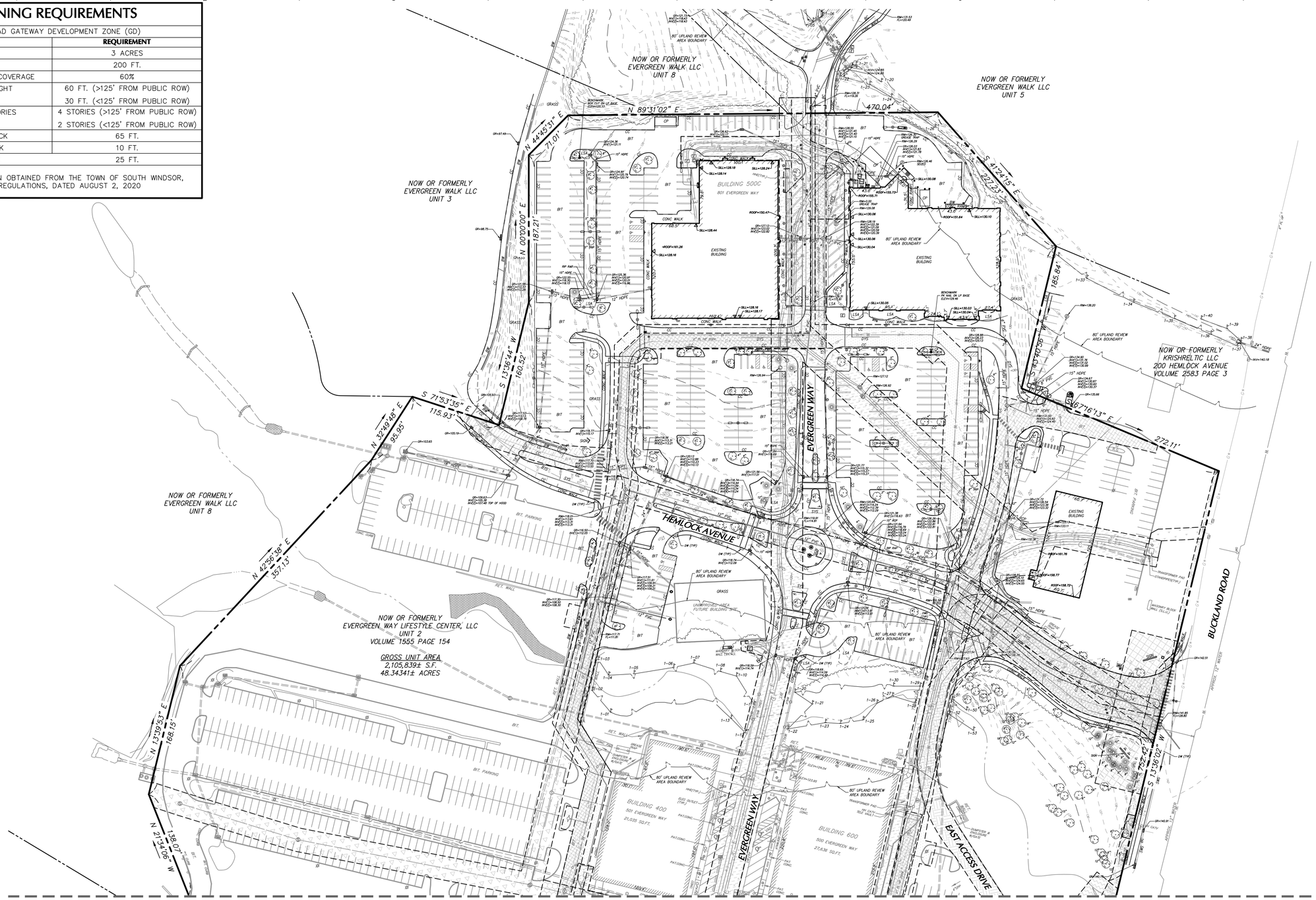

MATCH LINE VB102

EASEMENT LEGEND

- EXCEPTION #13 SLOPE EASEMENT VOL 691 PAGE 73
- EXCEPTION #14 SLOPE EASEMENT VOL 694 PAGE 239
- EXCEPTION #14 DRAINAGE RIGHT OF WAY VOL 694 PAGE 239
- EXCEPTION #14 RIGHTS TO GRADE & CONSTRUCT DRIVEWAY, VOL 694 PAGE 239
- EXCEPTION #15 SLOPE EASEMENT VOL 1336 PAGE 287
- EXCEPTION #22 WATER EASEMENT VOL 1598 PAGE 95
- EXCEPTION #23 GAS EASEMENT VOL 1617 PAGE 272
- EXCEPTION #24 ELECTRIC DISTRIBUTION EASEMENT VOL 1619 PAGE 10A, VOL 1682 PAGE 151, AND VOL 2542 PAGE 47.
- EXCEPTION #25 TELECOMMUNICATIONS EASEMENT VOL 1632 PAGE 244, VOL 1686 PAGE 25, AND VOL 1686 PAGE 32
- EXCEPTION #27 SLOPE EASEMENT VOL 1660 PAGE 229
- EXCEPTION #30 SANITARY SEWER EASEMENT VOL 1660 PAGE 333
- EXCEPTION #31 GRANT OF RIGHT-OF-WAY TO THE TOWN OF SOUTH WINDSOR EASEMENT VOL 1664 PAGE 20
- EXCEPTION #33 ACCESS EASEMENT VOL 1753 PAGE 200
- EXCEPTION #35 STORM DRAINAGE AREA VOL 1831 PAGE 82
- EXCEPTION #36 SANITARY SEWER AREA VOL 1831 PAGE 108
- EXCEPTION #44 ELECTRIC DISTRIBUTION EASEMENT VOL 2510 PAGE 71
- EXCEPTION #47 WATER MAIN EASEMENT VOL 2684 PAGE 270
- TRAFFIC EQUIPMENT EASEMENT IN FAVOR OF THE TOWN OF SOUTH WINDSOR PER REFERENCE MAP 2R
- EASEMENT IN FAVOR OF THE TOWN OF SOUTH WINDSOR PER REFERENCE MAP 2R

THIS IS TO CERTIFY TO

THAT THIS MAP OR PLAT AND THE SURVEY ON WHICH IT IS BASED WERE MADE IN ACCORDANCE WITH THE 2016 MINIMUM STANDARD DETAIL REQUIREMENTS FOR ALTA/NSPS LAND TITLE SURVEYS, JOINTLY ESTABLISHED AND ADOPTED BY ALTA AND NSPS, AND INCLUDES ITEMS 2, 3, 4, 5, 6(a), 7(a), 8, 11, 13, 16, 17, 18, AND 19 OF TABLE A THEREOF. THE FIELD WORK WAS COMPLETED ON MARCH 15, 2021.

DATE OF MAP: AUGUST 25, 2021

8/25/2021

ANDREW G. IVES, P.L.S. #70286 — DATE

STATE OF CONNECTICUT — ANDREW G. IVES — NO. 70286 — LICENSED LAND SURVEYOR

SCALE: 1 INCH = 60 FEET

Date	Description	No.
8/25/21	ADDITIONAL WETLAND FLAGS	3
4/26/21	ADDED TRAFFIC EASEMENT	2
3/17/21	WETLAND FLAG LOCATIONS	1

REVISIONS

LANGAN

Langan CT, Inc.
555 Long Wharf Drive
New Haven, CT 06511

T: 203.562.5771 F: 203.789.6142 www.langan.com

Project: EVERGREEN WALK LIFESTYLE CENTER, LLC — UNIT 2 — SOUTH WINDSOR, CONNECTICUT

Drawing Title: ALTA/NSPS LAND TITLE SURVEY

Project No. 140222801

Date: FEBRUARY 8, 2021

Drawn By: JRL

Checked By: AGI

Drawing No. VL101

Sheet 1 of 3

LANGAN

PROJECT NO. 140222801

Filename: I:\langan.com\data\HHV\data8\140222801\Project Data_Discipline\Survey\CAD\Existing\140222801-V-PR01011-Unit 2.dwg Date: 8/25/2021 Time: 11:21 User: jstublic Style Table: Langan.stb Layout: VL101

EASEMENT LEGEND

- EXCEPTION #13 SLOPE EASEMENT VOL 691 PAGE 73
- EXCEPTION #14 SLOPE EASEMENT VOL 694 PAGE 239
- EXCEPTION #14 DRAINAGE RIGHT OF WAY VOL 694 PAGE 239
- EXCEPTION #14 RIGHTS TO GRADE & CONSTRUCT DRIVEWAY, VOL 694 PAGE 239
- EXCEPTION #15 SLOPE EASEMENT VOL 1336 PAGE 287
- EXCEPTION #22 WATER EASEMENT VOL 1598 PAGE 95
- EXCEPTION #23 GAS EASEMENT VOL 1617 PAGE 273
- EXCEPTION #24 ELECTRIC DISTRIBUTION EASEMENT VOL 1619 PAGE 104, VOL 1682 PAGE 151, AND VOL 2342 PAGE 41
- EXCEPTION #25 TELECOMMUNICATIONS EASEMENT VOL 1632 PAGE 244, VOL 1686 PAGE 25, AND VOL 1686 PAGE 32
- EXCEPTION #27 SLOPE EASEMENT VOL 1660 PAGE 229
- EXCEPTION #30 SANITARY SEWER EASEMENT VOL 1660 PAGE 333
- EXCEPTION #31 GRANT OF RIGHT-OF-WAY TO THE TOWN OF SOUTH WINDSOR EASEMENT VOL 1664 PAGE 20
- EXCEPTION #33 ACCESS EASEMENT VOL 1753 PAGE 200
- EXCEPTION #35 STORM DRAINAGE AREA VOL 1831 PAGE 82
- EXCEPTION #36 SANITARY SEWER AREA VOL 1831 PAGE 108
- EXCEPTION #44 ELECTRIC DISTRIBUTION EASEMENT VOL 2510 PAGE 71
- EXCEPTION #47 WATER MAIN EASEMENT VOL 2684 PAGE 270
- TRAFFIC EQUIPMENT EASEMENT IN FAVOR OF THE TOWN OF SOUTH WINDSOR PER REFERENCE MAP 2R
- EASEMENT IN FAVOR OF THE TOWN OF SOUTH WINDSOR PER REFERENCE MAP 2R

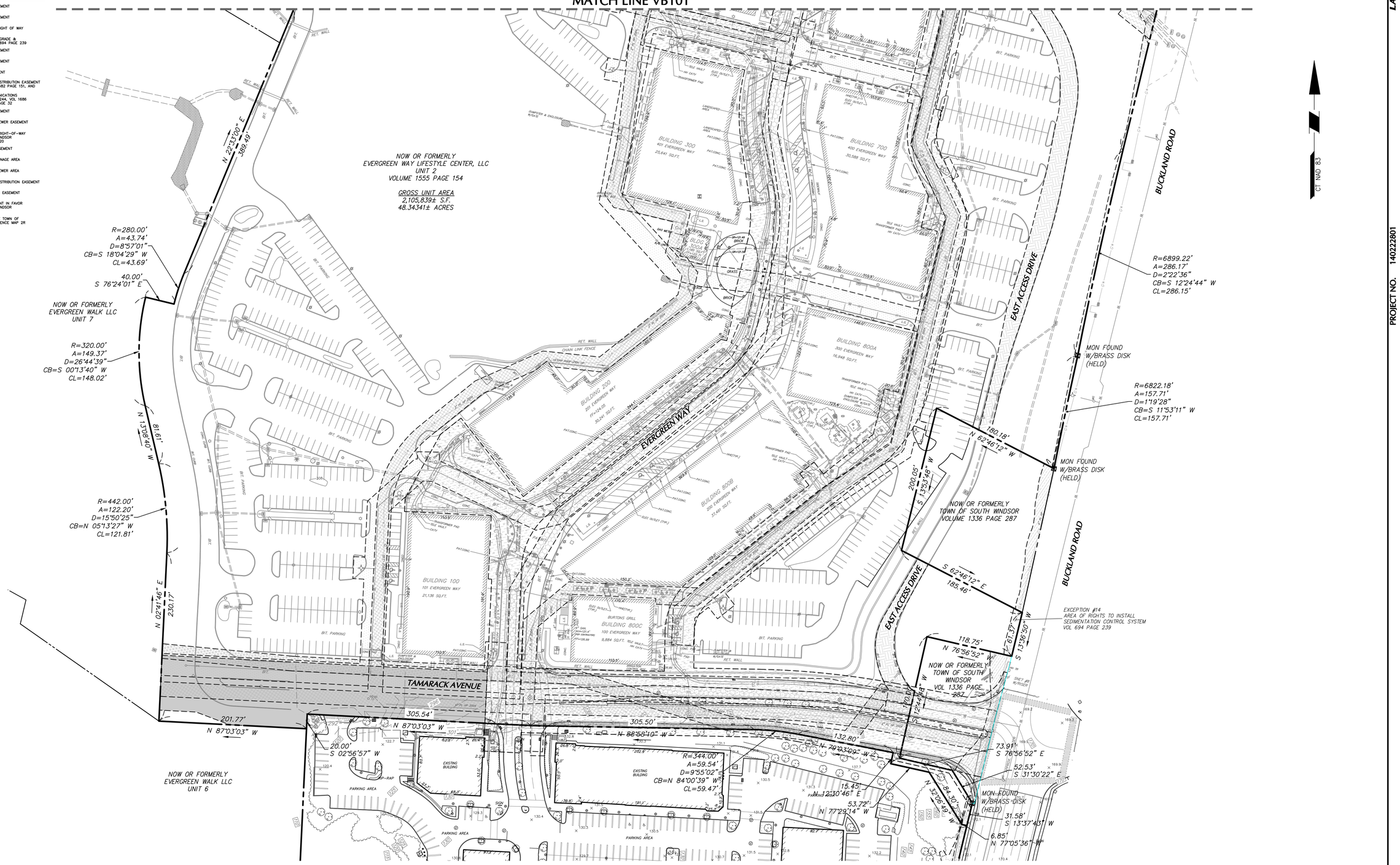

SCALE: 1 INCH = 60 FEET

Date	Description	No.
8/25/21	ADDITIONAL WETLAND FLAGS	3
4/26/21	ADDED TRAFFIC EASEMENT	2
3/17/21	WETLAND FLAG LOCATIONS	1

REVISIONS

LANGAN

Langan CT, Inc.
555 Long Wharf Drive
New Haven, CT 06511

T: 203.562.5771 F: 203.789.6142 www.langan.com

Project
EVERGREEN WALK LIFESTYLE CENTER, LLC
UNIT 2
SOUTH WINDSOR CONNECTICUT

Drawing Title
ALTA/NSPS LAND TITLE SURVEY

Project No. 140222801
Date FEBRUARY 8, 2021
Drawn By JRL
Checked By AGI

Drawing No. VL102
Sheet 2 of 3

LANGAN
PROJECT NO. 140222801

© 2021 Langan

Filename: \\langan.com\data\HHV\data\140222801\Project Data_Discipline\Survey\CAD\Existing\140222801-V-PR0101-Unit 2.dwg Date: 8/25/2021 Time: 11:22 User: jstublic Style Table: Langan.stb Layout: VL102

TITLE REPORT

COMMITMENT FOR TITLE INSURANCE ISSUED BY FIRST AMERICAN TITLE INSURANCE COMPANY. COMMITMENT NUMBER: NCS–1035618–PHX1, EFFECTIVE DATE OCTOBER 30, 2020. SCHEDULE B SECTION II:

1. NOT SURVEY RELATED.
2. SURVEY PROVIDED.
3. NOT SURVEY RELATED.
4. RIGHTS MAY EXIST.
5. SURVEY PROVIDED.

6–8. NOT SURVEY RELATED.

9. COVENANTS, AGREEMENTS, CONDITIONS AND RESTRICTIONS AS DEFINED IN VOL 1555 PAGE 154. BLANKET IN NATURE.
10. TWELVE FOOT RIGHT OF WAY AS DEFINED IN VOL 37 PAGE 323 AND SHOWN ON MAP NO. 1160A. DOES NOT PERTAIN TO SUBJECT PARCEL.
11. DRAINAGE EASEMENT AS DEFINED IN VOL 121 PAGE 690. NOT PLOTTABLE BUT APPEARS TO NOT PERTAIN TO SUBJECT PARCEL.
12. DRAINAGE EASEMENT AS DEFINED IN VOL 128 PAGE 114. NOT PLOTTABLE BUT APPEARS TO NOT PERTAIN TO SUBJECT PARCEL.
13. SLOPE EASEMENT AS DEFINED IN VOL 691 PAGE 73. DEPICTED ON SURVEY.
14. SLOPE EASEMENT, DRAINAGE RIGHT OF WAY, RIGHTS TO GRADE & CONSTRUCT DRIVEWAY, AND AREA OF RIGHTS TO INSTALL SEDIMENTATION CONTROL SYSTEM AS DEFINED IN VOL 694 PAGE 239. DEPICTED ON SURVEY.
15. SLOPE EASEMENT AS DEFINED IN VOL 1336 PAGE 287. DEPICTED ON SURVEY.

16–19. NOT SURVEY RELATED.

20. DECLARATION OF RESTRICTIONS – RIPARIAN BUFFER AS DEFINED IN VOL 1554 PAGE 284. DOES NOT PERTAIN TO SUBJECT PARCEL.
21. NOT SURVEY RELATED
22. WATER MAIN EASEMENT AS DEFINED IN VOL 1598 PAGE 95. DEPICTED ON SURVEY.
23. GAS DISTRIBUTION EASEMENT AS DEFINED IN VOL 1617 PAGE 273. DEPICTED ON SURVEY.
24. ELECTRIC DISTRIBUTION EASEMENT AS DEFINED IN VOL 1619 PAGE 104, VOL 1682 PAGE 151, AND VOL 2542 PAGE 47. DEPICTED ON SURVEY. VOL 1806 PAGE 114 WAS NOT PROVIDED TO SURVEYOR.
25. TELECOMMUNICATIONS EASEMENT VOL 1632 PAGE 244, VOL 1686 PAGE 25, AND VOL 1686 PAGE 32. DEPICTED ON SURVEY.
26. ACCESS EASEMENT AS DEFINED IN VOL 1643 PAGE 287. BLANKET IN NATURE ACROSS ALL CONSTRUCTED ROADWAYS, PATHWAYS AND SIDEWALKS.
27. SLOPE EASEMENT AS DEFINED IN VOL 1660 PAGE 229. DEPICTED ON SURVEY.
28. SLOPE EASEMENT AS DEFINED IN VOL 1660 PAGE 314. DOES NOT PERTAIN TO PROJECT PARCEL.
29. SLOPE EASEMENT AS DEFINED IN VOL 1660 PAGE 327. DOES NOT PERTAIN TO PROJECT PARCEL.
30. SANITARY SEWER EASEMENT AS DEFINED IN VOL 1660 PAGE 333. DEPICTED ON SURVEY.
31. EMERGENCY ACCESS EASEMENT AND PUBLIC DEDICATION AS DEFINED IN VOL 1664 PAGE 20. DEPICTED ON SURVEY.
32. FIRST AND SECOND ACCESS EASEMENTS AS DEFINED IN VOL 1693 PAGE 203. EASEMENTS CAN NOT BE PLOTTED, REFERENCED MAPS NOT NOT ON FILE IN LAND RECORDS.
33. ACCESS EASEMENT AS DEFINED IN VOL 1753 PAGE 200. DEPICTED ON SURVEY.
34. NOT SURVEY RELATED.
35. CONNECTION AND USE AGREEMENT ALONG STORM DRAINAGE AREA AS DEFINED IN VOL 1831 PAGE 82. DEPICTED ON SURVEY.
36. CONNECTION AND USE AGREEMENT ALONG SANITARY SEWER AREA AS DEFINED IN VOL 1831 PAGE 108. DEPICTED ON SURVEY.

37–38. NOT SURVEY RELATED.

39. GAS DISTRIBUTION EASEMENT AS DEFINED IN VOL 1997 PAGE 84. DOES NOT PERTAIN TO SUBJECT PARCEL.

40–42. NOT SURVEY RELATED.

43. WATER MAIN EASEMENT AS DEFINED IN VOL 2484 PAGE 101. DOES NOT PERTAIN TO SUBJECT PARCEL.
44. ELECTRIC DISTRIBUTION EASEMENT AS DEFINED IN VOL 2510 PAGE 71. DEPICTED ON SURVEY.
45. NOT SURVEY RELATED.
46. SEWER ACCESS AGREEMENT AS DEFINED IN VOL 2666 PAGE 185. ACROSS EXISTING SANITARY SEWER LINES.
47. WATER MAIN EASEMENT AS DEFINED IN VOL 2684 PAGE 270. DEPICTED ON SURVEY.
48. MAPS REFERENCED ON SURVEY.

NOTES

1. THIS SURVEY HAS BEEN PREPARED PURSUANT TO THE REGULATIONS OF CONNECTICUT STATE AGENCIES SECTIONS 20–300b–1 THROUGH 20–300b–20 AND THE "STANDARDS FOR SURVEYS AND MAPS IN THE STATE OF CONNECTICUT" AS ADOPTED BY THE CONNECTICUT ASSOCIATION OF LAND SURVEYORS, INC. ON SEPTEMBER 26, 1996.
   a. THIS SURVEY IS A PROPERTY SURVEY CONFORMING TO A HORIZONTAL ACCURACY OF A–2 AND A TOPOGRAPHIC SURVEY CONFORMING TO A T–2 ACCURACY. THE BOUNDARY DETERMINATION IS A RESURVEY. THE PURPOSE OF THIS SURVEY IS TO PROVIDE A BOUNDARY OPINION AND DEPICT SITE FEATURES FOR FUTURE SITE DEVELOPMENT.
2. THIS SURVEY IS BASED UPON EXISTING PHYSICAL CONDITIONS FOUND AT THE SUBJECT SITE, DEED INFORMATION AND THE FOLLOWING REFERENCES:
   A. MAP TITLED "TOWN OF SOUTH WINDSOR MAP SHOWING LAND ACQUIRED FROM ADELINE P. URSO BY THE STATE OF CONNECTICUT BUCKLAND ROAD", SCALE: 1"=40', DATED: JUNE 1991, LAST REVISED: 8–27–91, TOWN NO. 132, PROJECT NO. 132–100, SERIAL NO. 4, SHEET 1 OF 1
   B. MAP TITLED "TOWN OF SOUTH WINDSOR MAP SHOWING LAND ACQUIRED FROM CATHOLIC CEMETERIES ASSOCIATION OF THE ARCHDIOCESE OF HARTFORD INC. BY THE STATE OF CONNECTICUT BUCKLAND ROAD", SCALE: 1"=40', DATED: JULY 1991, LAST REVISED: 1–7–93, TOWN NO. 132, PROJECT NO. 132–100, SERIAL NO. 3, SHEET 1 & 2 OF 4.
   C. MAP TITLED "COMPILATION PLAN TOWN OF SOUTH WINDSOR MAP SHOWING LAND RELEASED TO THE TOWN OF SOUTH WINDSOR BY THE STATE OF CONNECTICUT DEPARTMENT OF TRANSPORTATION BUCKLAND ROAD", SCALE: 1"=20', DATED: AUG. 2000, TOWN NO. 132, PROJ. NO. 132–100, SERIAL NO. 6A, SHEET NO. 1 & 2 OF 3
   D. MAP TITLED "EVERGREEN WALK, LLC PROPOSED WATER EASEMENT TO BE GRANTED TO CONNECTICUT WATER COMPANY BUCKLAND ROAD SOUTH WINDSOR, CONNECTICUT", SCALE: 1"=80, DATED: 01/19/04, LAST REVISED: 03/30/04, SHEET 1 & 2 OF 2, BY: FUSS & O'NEILL INC.
   E. MAP TITLED "COMPILATION PLAN MAP SHOWING EASEMENT AREA TO BE GRANTED TO YANKEE GAS SERVICES COMPANY ACROSS THE PROPERTY OF EVERGREEN WALK LIFESTYLE CENTER, LLC AND EVERGREEN WALK, LLC BUCKLAND ROAD SOUTH WINDSOR, CONNECTICUT", SCALE: 1"=80', DATED: 02/05/2004, LAST REVISED: 05/21/04, YANKEE GAS FILE NUMBER: E4013, BY: FUSS & O'NEILL INC.
   F. MAP TITLED "COMPILATION PLAN MAP SHOWING EASEMENT AREA TO BE GRANTED TO THE CONNECTICUT LIGHT AND POWER COMPANY ACROSS THE PROPERTY OF EVERGREEN WALK LIFESTYLE CENTER, LLC AND EVERGREEN WALK, LLC BUCKLAND ROAD SOUTH WINDSOR, CONNECTICUT", SCALE: 1"=80', DATED: 12/22/03, LAST REVISED: 5/21/04, CL&P FILE NO. #E3333, BY: FUSS & O'NEILL INC.
   G. MAP TITLED "COMPILATION PLAN MAP SHOWING EASEMENT TO BE MODIFIED AND EASEMENT AREA TO BE GRANTED TO THE CONNECTICUT LIGHT & POWER COMPANY ACROSS THE PROPERTY OF EVERGREEN WALK LIFESTYLE CENTER, LLC BUCKLAND ROAD SOUTH WINDSOR, CONNECTICUT", SCALE: 1"=80', DATED: 12/23/04, CL&P FILE NO. #E4334, BY: FUSS & O'NEILL INC
   H. MAP TITLED "EASEMENT PLAN CL&P FILE NO. E6040, COMPILATION PLAN MAP SHOWING EXISTING CONNECTICUT LIGHT AND POWER COMPANY EASEMENT TO BE MODIFIED AND PROPOSED EASEMENT AREA TO BE GRANTED TO THE CONNECTICUT LIGHT AND POWER COMPANY DBA EVERSOURCE ENERGY ACROSS THE PROPERTY OF EVERGREEN WALK LIFESTYLE CENTER, LLC BUCKLAND ROAD – SOUTH WINDSOR, CONNECTICUT", SCALE: 1"=20', DATED: 04/11/2016, LAST REVISED: 4/28/2016, BY: BL COMPANIES
   I. MAP TITLED "RIGHT OF WAY & EASEMENT SURVEY PREPARED FOR POAG & MCEWEN BUCKLAND ROAD & DEMING STREET SOUTH WINDSOR, CT.", SCALE: 1"=40', DATED: 9/10/04, LAST REVISED: 10/19/04, SHEETS V01.1 & V01.2, BY: FUSS & O'NEILL INC.
   J. MAP TITLED "EVERGREEN WALK LIFESTYLE CENTER, LLC PROPOSED SANITARY SEWER EASEMENT TO BE GRANTED TO TOWN OF SOUTH WINDSOR BUCKLAND ROAD SOUTH WINDSOR, CONNECTICUT", SCALE: 1"=80', DATED: 02/05/04, LAST REVISED: 03/30/04, SHEETS V.01–1 & V.01–2, BY: FUSS & O'NEILL INC.
   K. MAP TITLED "RIGHT–OF–WAY GRANTED TO THE TOWN OF SOUTH WINDSOR BUCKLAND SOUTH WINDSOR, CONNECTICUT", SCALE: 1"=50', DATED: 09/07/04, BY: FUSS & O'NEILL INC.
   L. MAP TITLED "POAG & MCEWEN LIFESTYLE CENTER – CONNECTICUT, LLC EASEMENT MAP THE SHOPS AT EVERGREEN WALK BUCKLAND ROAD SOUTH WINDSOR, CONNECTICUT", SCALE: 1"=40', DATED: 05/16/05, BY: FUSS & O'NEILL INC.
   M. MAP TITLED "DRAINAGE AREA BUCKLAND ROAD SOUTH WINDSOR, CONNECTICUT", SCALE: 1"=60', DATED: 07/20/05, LAST REVISED: 3/16/06, SHEET V.1–01, BY: FUSS & O'NEILL INC.
   N. MAP TITLED "EXHIBIT "A" SANITARY SEWER AREA BUCKLAND ROAD SOUTH WINDSOR, CONNECTICUT", SCALE: 1"=40', DATED: 07/20/05, LAST REVISED: 3/16/06, BY: FUSS & O'NEILL INC.
   O. MAP TITLED "COMPILATION PLAN MAP SHOWING EASEMENT AREA TO BE GRANTED TO THE CONNECTICUT LIGHT AND POWER COMPANY DBA EVERSOURCE ENERGY ACROSS THE PROPERTY OF EVERGREEN WALK LIFESTYLE CENTER, LLC TAMARACK AVENUE SOUTH WINDSOR, CONNECTICUT", SCALE: 1"=40', DATED; 09/04/2015, FILE NO. E5097, BY: FUSS & O'NEILL INC.
   P. MAP TITLED "WATER EASEMENT PLAN UNIT 2, EASEMENT PLAN MAP SHOWING EASEMENT AREA TO BE GRANTED TO THE CONNECTICUT WATER COMPANY ACROSS THE PROPERTY OF EVERGREEN WALK LIFESTYLE CENTER, LLC UNIT 2 EVERGREEN WALK SOUTH WINDSOR, CONNECTICUT", SCALE: 1"=60', DATED: JULY 24, 2018, BY: VHB
   Q. MAP TITLED "ALTA/ACSM LAND TITLE SURVEY PREPARED FOR EVERGREEN WALK LIFESTYLE CENTER, LLC, HARTFORD COUNTY, BUCKLAND ROAD, SOUTH WINDSOR, CONNECTICUT", SCALE:1"=40', DATED: APRIL 4, 2005, REVISED TO 01/05/2006, BY: FUSS & O'NEILL INC.
   R. MAP TITLED "DATA ACCUMULATION PLAN AS BUILT OF LIMITED IMPROVEMENTS PREPARED FOR HOAR CONSTRUCTION / FOLSOM CONSTRUCTION EVERGREEN WALK PROJECT BUCKLAND ROAD & TAMARACK AVENUE & DEMING STREET SO. WINDSOR, CONNECTICUT", SCALE: 1"=40', DATED: OCTOBER 22, 2004, LAST REVISED: 9/22/06, SHEET 3 OF 8, BY: O'BRIEN ASSOCIATES, INC.
3. THE MERIDIAN OF THIS SURVEY IS REFERENCED TO CONNECTICUT STATE PLANE COORDINATE SYSTEM NAD 83 (EPOCH 2011). POSITION WAS DETERMINED BY GLOBAL NAVIGATION SATELLITE SYSTEMS (GNSS) AS PROVIDED BY HXGN SMARTNET CONTINUOUSLY OPERATED REFERENCE STATIONS (CORS).
4. ELEVATIONS SHOWN ARE REFERENCED TO NORTH AMERICAN VERTICAL DATUM OF 1988 (NAVD88) (GEOID 12B) AS DETERMINED BY GNSS
5. PLANIMETRIC AND TOPOGRAPHIC INFORMATION SHOWN HEREON HAS BEEN OBTAINED FROM GROUND SURVEYS BY LANGAN CT, INC. FIELD WORK COMPLETED DURING THE MONTH OF NOVEMBER 2020 AND MARCH 2021.
6. AS PER THE NATIONAL FLOOD INSURANCE PROGRAM FIRM MAP ENTITLED "HARTFORD COUNTY, CONNECTICUT PANEL 383 & 391 OF 675, MAP NUMBER 09003C0391F AND 09003C0383F, EFFECTIVE DATE SEPTEMBER 26, 2008" THE PROJECT AREA IS IN ZONE X (UNSHADED).
7. UNLESS SPECIFICALLY NOTED HEREON, STORM AND SANITARY SEWER INFORMATION (INCLUDING PIPE INVERT, PIPE MATERIAL, AND PIPE SIZE) WAS OBSERVED AND MEASURED AT FIELD LOCATED STRUCTURES (MANHOLES/CATCH BASINS, ETC). CONDITIONS CAN VARY FROM THOSE ENCOUNTERED AT THE TIMES WHEN AND LOCATIONS WHERE DATA IS OBTAINED. DESPITE MEETING THE REQUIRED STANDARD OF CARE, THE SURVEYOR CANNOT, AND DOES NOT WARRANT THAT PIPE MATERIAL AND/OR PIPE SIZE THROUGHOUT THE PIPE RUN ARE THE SAME AS THOSE OBSERVED AT EACH STRUCTURE, OR THAT THE PIPE RUN IS STRAIGHT BETWEEN THE LOCATED STRUCTURES.
8. ADDITIONAL UTILITY (WATER, GAS, ELECTRIC ETC.) DATA MAY BE SHOWN FROM FIELD LOCATED SURFACE MARKINGS (BY OTHERS), EXISTING STRUCTURES, AND/OR FROM EXISTING DRAWINGS.
9. UNLESS SPECIFICALLY NOTED HEREON, THE SURVEYOR HAS NOT EXCAVATED TO PHYSICALLY LOCATE THE UNDERGROUND UTILITIES. THE SURVEYOR MAKES NO GUARANTEES THAT THE SHOWN UNDERGROUND UTILITIES ARE EITHER IN SERVICE, ABANDONED OR SUITABLE FOR USE, NOR ARE IN THE EXACT LOCATION OR CONFIGURATION INDICATED HEREON.
10. ALL BUILDINGS AND STRUCTURES WERE LOCATED AND MEASURED AT GROUND LEVEL. THE SURVEYOR MAKES NO DETERMINATIONS OR GUARANTEES AS TO THE ABSENCE, EXISTENCE OR LOCATION OF UNDERGROUND STRUCTURES, FOUNDATIONS, FOOTINGS, PROJECTIONS, WALLS, TANKS, SEPTIC SYSTEMS, ETC. NO TEST PITS, EXCAVATIONS OR GROUND PENETRATING RADAR WERE PERFORMED AS PART OF THIS SURVEY.
11. NO EVIDENCE OF CURRENT EARTH MOVING WORK, BUILDING CONSTRUCTION OR BUILDINGS ADDITIONS WAS OBSERVED ON THE SUBJECT PREMISES.
12. NO EVIDENCE OF STREET RIGHT OF WAY LINE CHANGES OR OBSERVED EVIDENCE OF RECENT STREET OR SIDEWALK CONSTRUCTION OR REPAIRS WAS OBSERVED.
13. PRIOR TO ANY DESIGN OR CONSTRUCTION, THE PROPER UTILITY AGENCIES MUST BE CONTACTED FOR VERIFICATION OF UTILITY TYPE AND FOR FIELD LOCATIONS.
14. THIS SURVEY IS NOT VALID WITHOUT THE EMBOSSED OR INKED SEAL OF THE PROFESSIONAL.
15. WETLAND DELINEATION PERFORMED ON FEBRUARY 17, 2021 BY MATTHEW GUSTAFSON, REGISTERED SOIL SCIENTIST, ALL–POINTS TECHNOLOGY CORP. P.C.

LEGAL DESCRIPTION

BEGINNING AT A POINT ON THE WESTERLY SIDE OF BUCKLAND ROAD AND THE NORTHEAST CORNER OF UNIT 1, SAID POINT BEING THE SOUTHEAST CORNER OF HEREIN DESCRIBED PARCEL;

THENCE N 77° 05' 36" W BOUNDED SOUTHERLY BY UNIT 1, A DISTANCE OF 6.85'

THENCE N 32° 06' 49" W BOUNDED SOUTHERLY BY UNIT 1, A DISTANCE OF 84.30' TO A POINT;

THENCE N 77° 29' 14" W BOUNDED SOUTHERLY BY UNIT 1, A DISTANCE OF 53.72' TO A POINT;

THENCE N 12° 30' 46" E BOUNDED WESTERLY BY UNIT 1, A DISTANCE OF 15.45' TO A POINT;

THENCE N 79° 03' 09" W BOUNDED SOUTHERLY BY UNIT 1, A DISTANCE OF 132.80' TO A POINT OF CURVATURE;

THENCE ALONG A CURVE BOUNDED SOUTHERLY BY UNIT 1, CURVING TO THE LEFT, WITH AN ARC LENGTH OF 59.54', A RADIUS OF 344.00', AN INCLUDED ANGLE OF 09° 55' 02", AND A CHORD LENGTH OF 59.47' BEARING N 84° 00' 39" W TO A POINT OF TANGENCY;

THENCE N 88° 58' 10" W BOUNDED SOUTHERLY BY UNIT 1, A DISTANCE OF 305.50' TO A POINT;

THENCE N 87° 03' 03" W BOUNDED SOUTHERLY BY UNIT 1, A DISTANCE OF 305.54' TO A POINT;

THENCE S 02° 56' 57" W BOUNDED EASTERLY BY UNIT 1, A DISTANCE OF 20.00' TO A POINT;

THENCE N 87° 03' 03" W BOUNDED SOUTHERLY BY UNIT 6, A DISTANCE OF 201.77' TO A POINT;

THENCE N 02° 41' 46" E BOUNDED WESTERLY BY UNIT 7, A DISTANCE OF 230.17' TO A POINT OF CURVATURE;

THENCE ALONG A CURVE BOUNDED WESTERLY BY UNIT 7, CURVING TO THE LEFT, WITH AN ARC LENGTH OF 122.20', A RADIUS OF 442.00', AN INCLUDED ANGLE OF 15° 50' 25", AND A CHORD LENGTH OF 121.81' BEARING N 05° 13' 27" W TO A POINT OF NON–TANGENCY;

THENCE N 13° 08' 40" W BOUNDED WESTERLY BY UNIT 7, A DISTANCE OF 81.61' TO A POINT OF CURVATURE;

THENCE ALONG A CURVE BOUNDED WESTERLY BY UNIT 7, CURVING TO THE RIGHT, WITH AN ARC LENGTH OF 149.37', A RADIUS OF 320.00', AN INCLUDED ANGLE OF 26° 44' 39", AND A CHORD LENGTH OF 148.02' BEARING N 00° 13' 40" E TO A POINT OF NON–TANGENCY;

THENCE S 76° 24' 01" E BOUNDED NORTHERLY BY UNIT 7, A DISTANCE OF 40.00' TO A POINT OF CURVATURE;

THENCE ALONG A CURVE BOUNDED WESTERLY BY UNIT 7, CURVING TO THE RIGHT, WITH AN ARC LENGTH OF 43.74', A RADIUS OF 280.00', AN INCLUDED ANGLE OF 08° 57' 01", AND A CHORD LENGTH OF 43.69' BEARING N 18° 04' 29" E TO A POINT OF NON–TANGENCY;

THENCE N 22° 33' 00" E BOUNDED WESTERLY IN PART BY UNIT 7 AND IN PART BY UNIT 8, A DISTANCE OF 389.49' TO A POINT;

THENCE N 21° 34' 06" W BOUNDED WESTERLY BY UNIT 8, A DISTANCE OF 138.07' TO A POINT;

THENCE N 13° 39' 53" E BOUNDED WESTERLY BY UNIT 8, A DISTANCE OF 168.15' TO A POINT;

THENCE N 42° 56' 38" E BOUNDED WESTERLY BY UNIT 8, A DISTANCE OF 357.13' TO A POINT;

THENCE N 32° 49' 48" E BOUNDED WESTERLY BY UNIT 8, A DISTANCE OF 95.95' TO A POINT;

THENCE S 71° 53' 35" E BOUNDED NORTHERLY BY UNIT 3, A DISTANCE OF 115.93' TO A POINT;

THENCE N 13° 36' 44" E BOUNDED WESTERLY BY UNIT 3, A DISTANCE OF 160.52' TO A POINT;

THENCE N 00° 00' 00" E BOUNDED WESTERLY BY UNIT 3, A DISTANCE OF 187.21' TO A POINT;

THENCE N 44° 45' 31" E BOUNDED WESTERLY BY UNIT 3, A DISTANCE OF 71.01' TO A POINT;

THENCE N 89° 31' 02" E BOUNDED NORTHERLY IN PART BY UNIT 3, IN PART BY UNIT 8 AND IN PART BY UNIT 5, A DISTANCE OF 470.04' TO A POINT;

THENCE S 41° 24' 15" E BOUNDED EASTERLY BY UNIT 5, A DISTANCE OF 227.23' TO A POINT;

THENCE S 13° 40' 56" W BOUNDED EASTERLY BY LAND NOW OR FORMERLY OF KRISHRELTIC LLC, A DISTANCE OF 185.84' TO A POINT;

THENCE S 67° 16' 13" E BOUNDED NORTHERLY BY LAND NOW OR FORMERLY OF KRISHRELTIC LLC, A DISTANCE OF 272.11' TO A POINT ON THE WESTERLY SIDE OF BUCKLAND ROAD;

THENCE S 13° 36' 02" W ALONG SAID WESTERLY SIDE OF BUCKLAND ROAD, A DISTANCE OF 752.42' TO A POINT OF CURVATURE;

THENCE ALONG A CURVE ALONG SAID WESTERLY SIDE OF BUCKLAND ROAD, CURVING TO THE LEFT, WITH AN ARC LENGTH OF 286.17', A RADIUS OF 6899.22', AN INCLUDED ANGLE OF 02° 22' 36", AND A CHORD LENGTH OF 286.15' BEARING S 12° 24' 44" W TO A POINT OF COMPOUND CURVATURE;

THENCE ALONG A CURVE ALONG THE WESTERLY SIDE OF BUCKLAND ROAD, CURVING TO THE LEFT, WITH AN ARC LENGTH OF 157.71', A RADIUS OF 6822.18', AN INCLUDED ANGLE OF 01° 19' 28", AND A CHORD LENGTH OF 157.71' BEARING S 11° 53' 11" W TO A POINT OF NON–TANGENCY ;

THENCE N 62° 46' 12" W BOUNDED SOUTHERLY BY LAND NOW OR FORMERLY OF TOWN OF SOUTH WINDSOR, A DISTANCE OF 180.18' TO A POINT;

THENCE S 13° 53' 48" W BOUNDED EASTERLY BY LAND NOW OR FORMERLY OF TOWN OF SOUTH WINDSOR, A DISTANCE OF 200.05' TO A POINT;

THENCE S 62° 46' 12" E BOUNDED NORTHERLY BY LAND NOW OR FORMERLY OF TOWN OF SOUTH WINDSOR, A DISTANCE OF 185.46' TO A POINT ON THE WESTERLY SIDE OF BUCKLAND ROAD;

THENCE S 13° 36' 50" W ALONG SAID WESTERLY SIDE OF BUCKLAND ROAD, A DISTANCE OF 61.37' TO A POINT;

THENCE N 76° 56' 52" W BOUNDED SOUTHERLY BY LAND NOW OR FORMERLY OF TOWN OF SOUTH WINDSOR, A DISTANCE OF 118.75' TO A POINT;

THENCE S 12° 44' 48" W BOUNDED EASTERLY BY LAND NOW OR FORMERLY OF TOWN OF SOUTH WINDSOR, A DISTANCE OF 170.00' TO A POINT;

THENCE S 76° 56' 52" E BOUNDED NORTHERLY BY LAND NOW OR FORMERLY OF TOWN OF SOUTH WINDSOR, A DISTANCE OF 73.91' TO A POINT;

THENCE S 31° 30' 22" E BOUNDED NORTHERLY BY LAND NOW OR FORMERLY OF TOWN OF SOUTH WINDSOR, A DISTANCE OF 52.53' TO A POINT ON THE WESTERLY SIDE OF BUCKLAND ROAD;

THENCE S 13° 37' 43" W ALONG SAID WESTERLY SIDE OF BUCKLAND ROAD, A DISTANCE OF 31.58' TO THE POINT OF BEGINNING;

CONTAINING APPROXIMATELY 2,105,839 SQUARE FEET (48.34341 ACRES).

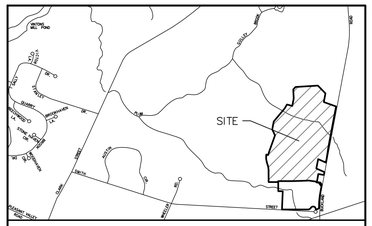

PROJECT LOCATION MAP

SCALE: 1"=1500'

SOURCE:
CONNECTICUT DEPARTMENT OF TRANSPORTATION

LEGEND (NOT SHOWN TO SCALE)

- AIR CONDITIONING UNIT
- BOLLARD
- COLUMN
- DOOR
- DOUBLE DOOR
- FLAG POLE
- PARKING METER
- SIGN
- SHRUB
- TREE
- GROUND LIGHT
- CATCH BASIN
- CLEANOUT
- ELECTRIC BOX
- ELECTRIC METER
- FILLER VALVE
- FIRE HYDRANT
- FLARED END SECTION
- COMMUNICATION BOX
- GAS METER
- GAS VALVE
- GUY WIRE
- LIGHT POLE
- MANHOLE (TYPE AS LABELED)
- POWER POLE
- ROOF DRAIN
- STANDPIPE
- TRAFFIC SIGNAL BOX
- PEDESTRIAN PUSH BUTTON
- TRAFFIC SIGNAL POLE
- UNDERGROUND VAULT
- VALVE UNKNOWN
- WATER METER
- WATER VALVE
- X 262.3 — SPOT ELEVATION
- BIT — BITUMINOUS
- CONC — CONCRETE
- CP — CONCRETE PAD
- LSA — LANDSCAPED AREA
- BOH — BUILDING OVERHANG
- BW — BOTTOM OF WALL
- DW — DETECTABLE WARNING
- BC — BITUMINOUS CURB
- CC — CONCRETE CURB
- GC — GRANITE CURB
- SWS — SINGLE WHITE STRIPE
- BWS — BROKEN WHITE STRIPE
- SYS — SINGLE YELLOW STRIPE
- DYS — DOUBLE YELLOW STRIPE
- METAL GUARD RAIL
- WOOD GUARD RAIL
- STOCKADE FENCE
- CHAINLINK FENCE
- IRON FENCE
- TREE LINE
- WETLAND LINE
- EASEMENT LINE
- PROPERTY LINE
- RIGHT–OF–WAY LINE
- 322 — CONTOUR LINE
- FM — SANITARY FORCE MAIN
- CATV — CABLE TV MARK OUT LINE
- D — DRAINAGE MARK OUT LINE
- E — ELECTRIC MARK OUT LINE
- C — COMMUNICATION MARK OUT LINE
- G — GAS MARK OUT LINE
- S — SANITARY SEWER MARK OUT LINE
- W — WATER MARK OUT LINE
- ST — STEAM MARK OUT LINE
- UNK — UNKNOWN MARK OUT LINE
- R* — REFERENCE UTILITY LINE (TYPE AS NOTED) – PLOTTED FROM EXISTING MAPPING

Date	Description	No.
8/25/21	ADDITIONAL WETLAND FLAGS	3
4/26/21	ADDED TRAFFIC EASEMENT	2
3/17/21	WETLAND FLAG LOCATIONS	1

REVISIONS

LANGAN
Langan CT, Inc.
555 Long Wharf Drive
New Haven, CT 06511
T: 203.562.5771 F: 203.789.6142 www.langan.com

Project: EVERGREEN WALK LIFESTYLE CENTER, LLC
UNIT 2
SOUTH WINDSOR CONNECTICUT

Drawing Title: ALTA/NSPS LAND TITLE SURVEY

Project No. 140222801
Date FEBRUARY 8, 2021
Drawn By JRL
Checked By AGI

Drawing No. VL103

Sheet 3 of 3

LANGAN
PROJECT NO. 140222801

© 2019 Langan

Filename: \\langan.com\data\HHV\data\140222801\Project Data_Discipline\Survey\CAD\Existing\140222801-V-PR0101-Unit 2.dwg Date: 8/25/2021 Time: 11:22 User: jstublic Style Table: Langan.stb Layout: VL103

GENERAL NOTES

1. PLANIMETRIC AND TOPOGRAPHIC INFORMATION SHOWN HEREON HAS BEEN OBTAINED FROM PLAN TITLED "ALTA/NSPS LAND TITLE SURVEY" BY LANGAN, CT, DATED 02-08-2021.
2. THE SITE LIES IN ZONE X (UNSHADED) AS SHOWN ON THE FEMA FLOOD INSURANCE RATE MAP NUMBERED 09003C0383F EFFECTIVE SEPTEMBER 26, 2008.
3. THE CONTRACTOR IS RESPONSIBLE FOR CONTACTING CALL BEFORE YOU DIG (WWW.CBYD.COM), PRIOR TO PERFORMING EXCAVATION TEST HOLES, TEST BORINGS, AND WHATEVER ADDITIONAL INVESTIGATION IS NECESSARY TO PROTECT AND MAINTAIN ALL EXISTING UTILITIES TO REMAIN THROUGHOUT THE CONSTRUCTION PERIOD. ANY CONFLICTS BETWEEN EXISTING UTILITIES AND PROPOSED UTILITIES DISCOVERED DURING CONSTRUCTION SHALL BE PROMPTLY REPORTED TO THE PROJECT ENGINEER.
4. ALL IMPROVEMENTS CONSTRUCTED IN THE TOWN PUBLIC RIGHT-OF-WAY SHALL CONFORM TO TOWN OF SOUTH WINDSOR STANDARD DETAILS. IN THE ABSENCE OF LOCAL DETAILS & REQUIREMENTS AND WORK IN THE STATE RIGHT-OF-WAY SHALL COMPLY WITH THE MOST UP TO DATE VERSION OF THE STATE OF CONNECTICUT DEPARTMENT OF TRANSPORTATION STANDARDS AND SPECIFICATIONS.
5. FOR AREAS OUTSIDE THE PROPERTY LINES, REPAIR AND/OR REPLACE ALL DAMAGE DONE TO EXISTING ELEMENTS (SIDEWALKS, PAVING, LANDSCAPING, ETC) AS REQUIRED BY OWNER AND/OR GOVERNING AUTHORITY.
6. ALL SIGNS AND PAVEMENT MARKINGS SHALL CONFORM TO THE LATEST EDITION OF THE MUTCD AND CONNECTICUT DEPARTMENT OF TRANSPORTATION REGULATIONS.
7. CONTRACTOR SHALL PREVENT DUST, SEDIMENT AND DEBRIS FROM EXITING THE SITE AND SHALL BE RESPONSIBLE FOR CLEANUP, REPAIRS AND CORRECTIVE ACTION IF SUCH OCCURS. ADJOINING STREETS AND PROPERTIES TO BE KEPT FREE OF DEBRIS RESULTING FROM DEMOLITION AND SHALL BE CLEANED ON A DAILY BASIS OR AS NEEDED.
8. DUST CONTROL TREATMENTS SHALL BE APPLIED AS NECESSARY TO CONTROL AND REDUCE THE AMOUNT OF DUST WHICH MAY CAUSE OFF-SITE DAMAGE, BE A HEALTH HAZARD TO HUMANS, WILDLIFE AND PLANT LIFE, OR POSE A HAZARD TO TRAFFIC SAFETY.
9. ABBREVIATIONS:

ARCH. = ARCHITECTURAL	R.O.W = RIGHT OF WAY
CONC. = CONCRETE	CO = CLEAN OUT
INV = INVERT	DIP = DUCTILE IRON PIPE
EX = EXISTING	PVC = POLYVINYL CHLORIDE PIPE
HDPE = HIGH DENSITY POLYETHYLENE PIPE	OCS = OUTLET CONTROL STRUCTURE
PR. = PROPOSED	RCP = REINFORCED CONCRETE PIPE
R&D = REMOVE & DISPOSE	LF = LINEAR FEET
R&R = REMOVE & REPLACE	RL = ROOF LEADER
TYP. = TYPICAL	TC = TOP OF CURB
SWL = SINGLE WHITE LINE	BC = BOTTOM OF CURB
SYL = SINGLE YELLOW LINE	TW = TOP OF WALL
BW = BOTTOM OF WALL	MH = MANHOLE
HP = HIGHPOINT	LA = LANDSCAPED AREA
GR = TOP OF GRATE	N.T.S. = NOT TO SCALE
RIM = TOP OF RIM	LF = LINEAR FEET
INV = INVERT	CB = CATCH BASIN
SAN MH = SANITARY SEWER MANHOLE	FES = FLAIRED END SECTION
FFE = FINISHED FLOOR ELEVATION	YD = YARD DRAIN
C.C. = CART CORRAL	

10. THE LOCATION OF EXISTING UNDERGROUND UTILITIES SHOWN HEREON IS TAKEN FROM DESIGN PLANS, AS-BUILT SKETCHES, EXISTING UTILITY COMPANY RECORDS, AND OTHER SOURCES OF INFORMATION AND IS NOT TO BE CONSTRUED AS AN ACCURATE "AS-BUILT" SURVEY AND IS SUBJECT TO SUCH CORRECTIONS THAT A MORE ACCURATE SURVEY MAY DISCLOSE.
11. THE EXISTING UTILITIES INDICATED HEREON MAY NOT BE LOCATED AS SHOWN. IN ADDITION, OTHER UTILITIES NOT SHOWN HEREON MAY BE PRESENT. ANY DISCREPANCIES DISCOVERED DURING THE COURSE OF CONSTRUCTION SHALL BE PROMPTLY REPORTED TO THE PROJECT ENGINEER.
12. ALL UTILITY WORK SHALL BE PERFORMED IN ACCORDANCE WITH THE REQUIREMENTS AND SPECIFICATIONS/DETAILS OF THE UTILITY COMPANY HAVING AUTHORITY OVER THE PROPOSED WORK. ALL PROPOSED UTILITY WORK SHALL BE PERFORMED IN ACCORDANCE WITH ALL APPLICABLE LOCAL, STATE, AND FEDERAL ORDINANCES/REQUIREMENTS GOVERNING THE PROPOSED WORK.
13. ANY UTILITY EASEMENTS REQUIRED BY ANY OF THE VARIOUS UTILITY COMPANIES SHALL BE OBTAINED, EXECUTED, AND RECORDED PRIOR TO ANY OF THE AFFECTED UTILITY WORK BEING PERFORMED.
14. ALL PROPOSED UTILITIES WILL BE LOCATED UNDERGROUND.
15. ALL PROPOSED STORM DRAINAGE PIPING TO UTILIZE WATER-TIGHT JOINTS.
16. THE CONTRACTOR SHALL BE RESPONSIBLE FOR PROPERLY SIZING ALL DRAINAGE STRUCTURES AND SUBMITTING SHOP DRAWINGS TO ENGINEER FOR REVIEW.
17. THE CONTRACTOR SHALL BE RESPONSIBLE FOR ALL PAVEMENT REPAIRS REQUIRED AS A RESULT OF ANY UTILITY WORK.
18. ALL PAVEMENT MARKINGS SHALL BE EPOXY RESIN PAINT.
19. ALL RADII ARE 3 FEET UNLESS OTHERWISE NOTED.
20. CONCRETE JOINTS ON SITE ARE TO BE FILLED WITH ½" ISOLATION JOINT FILLER, TO INCLUDE CONCRETE PAVEMENTS, MONOLITHIC CURBING, AND MONOLITHIC SIDEWALKS.
21. BOTTOM AND TOP OF RETAINING WALL ELEVATION SPOT SHOTS REPRESENT THE BASE OF THE WALL AT FINISHED GROUND LEVEL AND THE TOP OF THE FACE OF THE WALL RESPECTIVELY.
22. SPOT SHOTS ALONG CURB LINES REPRESENT THE BASE OF THE CURB UNLESS NOTED OTHERWISE.
23. ALL ON-SITE CONCRETE TO BE 4,500 PSI WITH 5% TO 7% AIR ENTRAPMENT UNLESS OTHERWISE NOTED.
24. TRANSFORMERS, HVAC UNITS, DUMPSTER AND SIMILAR SITE INSTALLATIONS MUST BE APPROPRIATELY SCREENED TO THE SATISFACTION OF THE PLANNING DEPARTMENT.
25. CONTRACTOR TO REMOVE ALL AGRICULTURAL PLASTIC SHEERING, IRRIGATION TUBING AND SIMILAR MATERIAL FROM THE SITE AND DISPOSE IN ACCORDANCE WITH ALL LOCAL AND STATE REGULATIONS. CONTRACTOR TO REMOVE EXISTING BERMS AND SMALL PILES OF MATERIAL FROM EDGES OF FIELDS AND GRAD TO BLEND SMOOTHLY INTO ADJACENT TOPOGRAPHY.

UTILITY NOTES

1. THE CONTRACTOR IS SPECIFICALLY CAUTIONED THAT THE LOCATION AND/OR ELEVATION OF EXISTING UTILITIES AS SHOWN ON THESE PLANS IS BASED ON RECORDS OF THE VARIOUS UTILITY COMPANIES, AND WHERE POSSIBLE, MEASUREMENTS TAKEN IN THE FIELD. THE INFORMATION IS NOT TO BE RELIED UPON AS BEING EXACT OR COMPLETE. THE CONTRACTOR MUST CONTACT "CALL-BEFORE-YOU-DIG" @ 1-800-922-4455 FOR THE LOCATION AND MARKING OF ALL EXISTING UTILITIES PRIOR TO ANY EXCAVATION. IT SHALL BE THE RESPONSIBILITY OF THE CONTRACTOR TO RELOCATE ALL UTILITIES WHICH CONFLICT WITH THE PROPOSED IMPROVEMENTS SHOWN ON THE PLANS.
2. THE CONTRACTOR SHALL FIELD VERIFY ALL EXISTING CONDITIONS, UTILITY LOCATIONS, AND INVERTS PRIOR TO CONSTRUCTION. ANY CONDITIONS FOUND TO DIFFER FROM THOSE SHOWN BY THE DRAWINGS SHALL BE IMMEDIATELY BROUGHT TO THE ATTENTION OF THE ENGINEER.
3. CONTRACTOR SHALL REFER TO ARCHITECTURAL AND MEP PLANS AND SPECIFICATIONS FOR ACTUAL LOCATIONS OF ALL UTILITY ENTRANCES TO INCLUDE SANITARY SEWER LATERALS, DOMESTIC AND FIRE PROTECTION WATER SERVICE, ELECTRICAL, TELEPHONE AND GAS SERVICE, AND ALL OTHER UTILITIES. CONTRACTOR SHALL COORDINATE INSTALLATION OF UTILITIES IN SUCH A MANNER AS TO AVOID CONFLICTS AND TO ENSURE PROPER DEPTHS ARE ACHIEVED AS WELL AS COORDINATING WITH THE REGULATORY AGENCY AS TO LOCATION OF AND SCHEDULING OF CONNECTIONS TO THEIR FACILITIES.
4. THE CONTRACTOR SHALL BE RESPONSIBLE FOR NOTIFYING UTILITY COMPANIES 72 HOURS PRIOR TO BEGINNING OF EXCAVATION.
5. THE CONTRACTOR SHALL BE RESPONSIBLE FOR ALL PAVEMENT REPAIRS REQUIRED AS A RESULT OF ANY UTILITY WORK.
6. LOCATION OF SITE UTILITIES SHALL BE VERIFIED BY GENERAL CONTRACTOR THE PROPER UTILITY COMPANY PROVIDING SERVICE.
7. GENERAL CONTRACTOR WILL BE RESPONSIBLE FOR ALL TAP AND TIE-IN FEES REQUIRED, AS WELL AS COST OF UNDERGROUND SERVICE CONNECTIONS TO THE BUILDING.
8. DIMENSIONS SHOWN ARE TO THE CENTERLINE OF PIPE OR FITTING.
9. ALL TRENCHING, PIPE LAYING, AND BACKFILLING SHALL BE IN ACCORDANCE WITH FEDERAL OSHA REGULATIONS.
10. GENERAL CONTRACTOR SHALL HAVE APPROVAL OF ALL GOVERNING AGENCIES HAVING JURISDICTION OVER THE SYSTEM PRIOR TO INSTALLATION.

ELECTRIC, TELEPHONE, & GAS:

11. CONTRACTOR TO COORDINATE GAS MAIN, ELECTRIC, AND TELEPHONE INSTALLATION WITH THE APPROPRIATE UTILITY COMPANIES.
12. CONTRACTOR SHALL MAINTAIN A MINIMUM OF 30 INCHES OF COVER FOR ALL UNDERGROUND ELECTRIC, TELEPHONE AND GAS UTILITIES.

WATER & SANITARY:

13. ALL SANITARY & WATER INSTALLATION TO MEET THE METROPOLITAN DISTRICT (MDC) AND TOWN OF SOUTH WINDSOR STANDARDS.
14. ALL SANITARY SEWER PIPE TO BE PUSH-JOINT POLYVINYL CHLORIDE (PVC) PIPE SDR-35. ALL JOINTS BETWEEN PVC PIPE SECTIONS AND BETWEEN PIPE AND PRECAST MANHOLES SHALL HAVE WATER-TIGHT RUBBER GASKET CONNECTIONS. ALL PVC PIPES AND FITTINGS SHALL COMPLY WITH ASTM D3034-93. ALL MAINS SHALL BE TESTED FOR LEAKAGE IN ACCORDANCE WITH THE LOW PRESSURE AIR TEST METHOD.
15. WHERE THE SANITARY SEWER LINE PASSES LESS THAN 18" BELOW THE WATER LINE, PROVIDE CONCRETE ENCASEMENT. THE LENGTH OF THE ENCASEMENT TO BE INCREASED TO THE NEAREST JOINT.
16. WHERE THE SANITARY SEWER LINE PASSES ABOVE THE WATER LINES, ENCASE SEWER IN 6" THICK CONCRETE FOR A DISTANCE OF 10 FEET ON EACH SIDE OF THE CROSSING, OR SUBSTITUTE RUBBER GASKETED PRESSURE PIPE FOR THE PIPE BEING USED FOR THE SAME DISTANCE.
17. CONTRACTOR SHALL MAINTAIN A MINIMUM OF 4.5 FEET OF COVER FOR ALL WATER DISTRIBUTION PIPING.
18. ALL NEW WATER LINES SHALL BE PRESSURE TESTED AND LEAKAGE TESTED IN ACCORDANCE WITH THE LATEST EDITION OF AWWA STANDARD C600.
19. ALL NEW WATER MAINS SHALL BE DISINFECTED IN ACCORDANCE WITH AWWA STANDARD C651.
20. GRAVITY PIPING SHALL BE INSTALLED FROM DOWNSTREAM TO UPSTREAM, "IN THE DRY". THE CONTRACTOR IS ENCOURAGED TO BEGIN WORK AT THE MOST DOWNSTREAM POINT IN THE SYSTEM, ESPECIALLY WHEN THE NEW WORK WILL CONNECT TO AN EXISTING UTILITY DOWNSTREAM. IF THE CONTRACTOR CHOOSES NOT TO START AT THE FURTHEST DOWNSTREAM LOCATION, THEN HE IS RESPONSIBLE FOR VERIFYING THE EXACT LOCATION, ELEVATION, AND INVERT OF THE EXISTING UTILITY PRIOR TO STARTING ANY WORK AND VERIFYING THAT THE EXISTING LOCATION AND INVERT ALLOWS FOR THE CONSTRUCTION OF THE PROPOSED SYSTEM AS DESIGNED.

ACCESSIBILITY NOTES

1. WALKWAYS ALONG ACCESSIBLE ROUTES NOT TO EXCEED 5% RUNNING SLOPE OR 2% CROSS SLOPE.
2. ALL ADA PARKING SPACES AND PASSENGER LOADING ZONES SHALL NOT EXCEED 2% IN ANY DIRECTION.
3. ALL ADA EGRESSES SHALL BE FLUSH WITH ADJOINING MATERIAL UNLESS NOTED OTHERWISE.
4. ALL CURB RAMPS SHALL NOT EXCEED 1:12 RUNNING SLOPE OR 2% CROSS SLOPE.
5. CONTRACTOR SHALL CONFIRM FIELD CONDITIONS ARE CONSISTENT WITH CONSTRUCTION DOCUMENTS AND NOTIFY LANGAN, CT OF ANY COMPLIANCE ISSUES PRIOR TO CONSTRUCTION.

SIGN LEGEND

A	B	C	D
30" x 30" (FOR ONE LANE) 36" x 36" (FOR 2 LANES) MUTCD: R1-1	12" x 18" SIGN AND 12" x 6" PLACARD MUTCD: R7-8p	30" x 30" MUTCD: R5-1 DO NOT MOUNT ON BACK OF STOP SIGN	12" x 18" SIGN MUTCD: R7-8

NOTES:

1. ALL PAVEMENT MARKINGS, INCLUDING HANDICAP, MUST CONFORM IN COLOR AND SIZE TO THE MOST RECENT EDITION OF CONNECTICUT DEPARTMENT OF TRANSPORTATION BUREAU OF ENGINEERING & HIGHWAY OPERATIONS CATALOG OF SIGNS.
2. ABOVE GRADE SIGNS FOR HANDICAP SPACES MUST MEET THE SPECIFICATIONS AS PRESCRIBED BY THE STATE STATUTE AND THE STATE BUILDING CODE.
3. ALL SIGNS MUST MEET THE REQUIREMENTS AND MOUNTING HEIGHT AS PUBLISHED IN THE MOST RECENT EDITION OF THE CONNECTICUT DEPARTMENT OF TRANSPORTATION BUREAU OF ENGINEERING & HIGHWAY OPERATIONS CATALOG OF SIGNS AND ITS ADDENDUMS (INC. STOP AND FIRE LANE).
4. ALL SIGN SIZES MUST MEET THE REQUIREMENTS AS PUBLISHED IN THE MOST RECENT EDITION OF THE CONNECTICUT DEPARTMENT OF TRANSPORTATION BUREAU OF ENGINEERING & HIGHWAY OPERATIONS CATALOG OF SIGNS AND ITS ADDENDUMS.

LEGEND

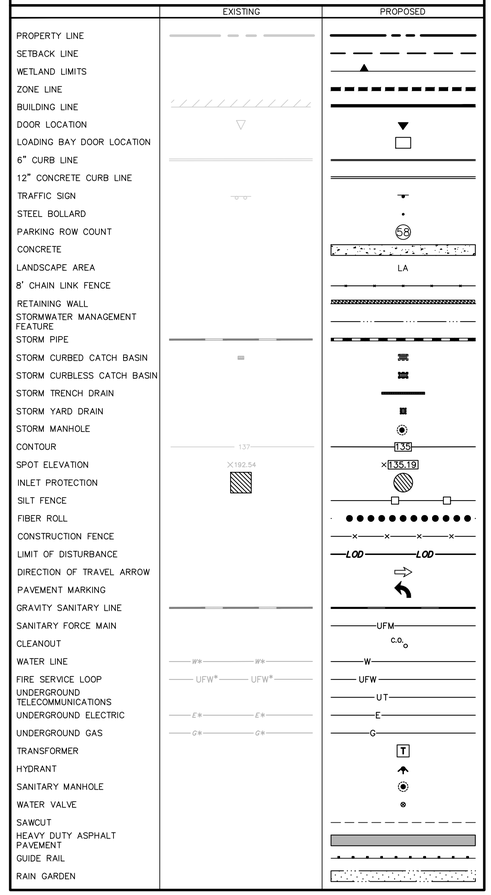

GRADING & DRAINAGE NOTES

1. THE SITE CONTRACTOR IS SPECIFICALLY CAUTIONED THAT THE LOCATION AND/OR ELEVATION OF EXISTING UTILITIES AS SHOWN ON THESE PLANS IS BASED ON RECORDS OF THE VARIOUS UTILITY COMPANIES, AND WHERE POSSIBLE, MEASUREMENTS TAKEN IN THE FIELD. THE INFORMATION IS NOT TO BE RELIED UPON AS BEING EXACT OR COMPLETE. THE SITE CONTRACTOR MUST CONTACT "CALL-BEFORE-YOU-DIG" (800-922-4455) FOR THE LOCATION AND MARKING OF ALL EXISTING UTILITIES PRIOR TO ANY EXCAVATION. IT SHALL BE THE RESPONSIBILITY OF THE SITE CONTRACTOR TO RELOCATE ALL UTILITIES WHICH CONFLICT WITH THE PROPOSED IMPROVEMENTS SHOWN ON THE PLANS.
2. THE SITE CONTRACTOR SHALL FIELD VERIFY ALL EXISTING CONDITIONS, UTILITY LOCATIONS, AND INVERTS PRIOR TO CONSTRUCTION. ANY CONDITIONS FOUND TO DIFFER FROM THOSE SHOWN ON THE DRAWINGS SHALL BE IMMEDIATELY BROUGHT TO THE ATTENTION OF THE ENGINEER.
3. LOCATIONS AND ELEVATIONS OF ROOF LEADERS SHOULD BE COORDINATED WITH ARCHITECTURAL DRAWINGS PRIOR TO CONSTRUCTION.
4. CLEANOUTS SHALL BE PROVIDED FLUSH TO GRADE AT ALL LOCATIONS OF ROOF DRAIN INTERSECTIONS, BENDS AND UPSTREAM ENDS.
5. ALL EXISTING STORM DRAINAGE PIPING AND STRUCTURES LOCATED WITHIN THE PROJECT SITE SHALL BE MAINTAINED UNLESS OTHERWISE NOTED.
6. ALL REQUIRED STORM LATERALS SERVICING THE PROPOSED BUILDING SHALL BE COORDINATED AND CONSTRUCTED TO WITHIN FIVE FEET OF THE FOUNDATION. ANY NECESSARY EXTENSIONS, RELOCATIONS, OR CORRECTIONS WITHIN FIVE FEET OF THE BUILDING NECESSARY TO COMPLETE CONNECTION OF LATERALS TO THE BUILDING SHALL BE MADE BY THE BUILDING CONTRACTOR.
7. SITE CONTRACTOR IS RESPONSIBLE FOR DETERMINING THE APPROPRIATE SIZES OF THE DRAINAGE STRUCTURES.
8. SITE CONTRACTOR TO INSTALL SILT SACK/INLET PROTECTION ON ALL EXISTING AND PROPOSED INLETS BEFORE COMMENCING CONSTRUCTION.
9. BASINS UTILIZED AS SEDIMENT BASINS DURING CONSTRUCTION SHALL BE CLEANED AFTER THE COMPLETION OF CONSTRUCTION TO ENSURE PROPER FUNCTIONALITY.
10. CONTRACTOR TO CLEAN ENTIRE DRAINAGE SYSTEM, WHICH INCLUDES BUT IS NOT LIMITED TO PIPES, STRUCTURES, AND BASINS, OF SEDIMENT PRIOR TO PROJECT COMPLETION.

CONTRACTOR NOTES

1. THESE PLANS REPRESENT THE OVERALL SITEWORK IMPROVEMENTS REQUIRED FOR PROJECT CONSTRUCTION. THE CONTRACTOR SHALL FURNISH, INSTALL, TEST AND COMPLETE ALL WORK TO THE SATISFACTION OF THE ENGINEER AND OWNER IN ACCORDANCE WITH THE CONTRACT DOCUMENTS. THE CONTRACTOR IS SOLELY RESPONSIBLE FOR MEANS AND METHODS OF CONSTRUCTION; AS SUCH, THESE PLANS DO NOT COMPLETELY REPRESENT, NOR ARE THEY INTENDED TO REPRESENT, ALL SPECIFIC INSTRUCTIONS REQUIRED FOR SITEWORK CONSTRUCTION. THE CONTRACTOR IS RESPONSIBLE TO CONSTRUCT ALL IMPROVEMENTS DEPICTED ON THESE PLANS IN ACCORDANCE WITH ALL APPLICABLE RULES, REGULATIONS AND LAWS IN EFFECT AT THE TIME OF CONSTRUCTION.
2. THE CONTRACTOR SHALL ACCEPT THE SITE AS IS. THE CONTRACTOR SHALL ASSESS CONDITIONS, AND THE KIND, QUALITY AND QUANTITY OF WORK REQUIRED. THE OWNER AND ENGINEER MAKES NO GUARANTEE IN REGARD TO THE ACCURACY OF ANY INFORMATION THAT WAS OBTAINED DURING INVESTIGATIONS. THE CONTRACTOR SHALL: MAKE A THOROUGH SITE INSPECTION IN ORDER TO FIELD CHECK EXISTING SITE CONDITIONS; CORRELATE CONDITIONS WITH THE DRAWINGS; AND, RESOLVE ANY POSSIBLE CONSTRUCTION CONFLICTS WITH THE OWNER AND ENGINEER PRIOR TO COMMENCEMENT OF WORK. THE CONTRACTOR SHALL PERFORM ADDITIONAL TOPOGRAPHIC SURVEYS HE/SHE DEEMS NECESSARY, PROVIDED THEY ARE COORDINATED WITH THE OWNER. ANY CONDITIONS DETERMINED BY THE CONTRACTOR THAT DIFFER FROM THE INFORMATION SHOWN ON THE DRAWINGS THAT ARE NOT BROUGHT TO THE ATTENTION OF THE OWNER AND ENGINEER PRIOR TO THE START OF WORK SHALL NOT BE CONSIDERED GROUNDS FOR ADDITIONAL PAYMENT OR CHANGES TO THE CONTRACT DURATION, OR ANY OTHER CLAIMS AGAINST THE OWNER OR OWNER'S ENGINEER.
3. THE CONTRACTOR SHALL, WHEN HE/SHE DEEMS NECESSARY, PROVIDE A WRITTEN REQUESTS FOR INFORMATION (RFI) TO THE OWNER AND/OR OWNER'S DESIGNATED REPRESENTATIVE, AND ENGINEER PRIOR TO THE CONSTRUCTION OF ANY SPECIFIC SITEWORK ITEM. THE (RFI) SHALL BE IN A FORM ACCEPTABLE TO OWNER AND/OR OWNER'S DESIGNATED REPRESENTATIVE, AND ENGINEER AND SHALL ALLOW FOR A MINIMUM OF THREE WORK DAYS FOR A WRITTEN REPLY. RFIS SHALL BE NUMBERED CONSECUTIVELY BY DATE SUBMITTED. THE CONTRACTOR SHALL BE SOLELY RESPONSIBLE FOR SITEWORK ITEMS CONSTRUCTED DIFFERENTLY THAN INTENDED OR AS DEPICTED ON THE PLANS.
4. INFORMATION RELATED TO ELEVATIONS AND PROPOSED UTILITIES (SUCH AS ROADWAY GRADES, INVERT ELEVATIONS, RIM ELEVATIONS, GRATE ELEVATIONS, BUILDING FINISHED FLOOR ELEVATIONS, ETC.) MAY BE FOUND IN MORE THAN ONE LOCATION IN THE CONTRACT DOCUMENTS. THE CONTRACTOR SHALL SUFFICIENTLY REVIEW ALL PLANS, PROFILES AND ANY OTHER INFORMATION IN THE CONTRACT DOCUMENTS FOR CONSISTENCY PRIOR TO BID. ANY INCONSISTENCIES OR DISCREPANCIES THAT ARE FOUND BY THE CONTRACTOR OR HIS ASSIGNS SHALL BE IMMEDIATELY BROUGHT TO THE ATTENTION OF THE OWNER AND ENGINEER IN WRITING, IN THE FORMAT OF AN RFI PRIOR TO BID.
5. THERE ARE ADDITIONAL NOTES, SPECIFICATIONS AND REQUIREMENTS CONTAINED THROUGHOUT THE PLAN SET AS WELL AS REFERENCES TO SPECIFICATIONS FROM APPLICABLE GOVERNING AUTHORITIES AND INDUSTRY STANDARDS. IT IS THE CONTRACTOR'S RESPONSIBILITY TO OBTAIN, REVIEW AND ADHERE TO ALL THESE DOCUMENTS.
6. CONTRACTOR IS SPECIFICALLY CAUTIONED THAT ALL CONSTRUCTION STAKEOUT FOR THIS PROJECT MUST BE COMPLETED FROM THE SITE SPECIFIC SURVEY CONTROL (HORIZONTAL AND VERTICAL) UPON WHICH THE DESIGN IS BASED. THE CONTRACTOR SHOULD NOT RELY ON OR RE-ESTABLISH SURVEY CONTROL BY GPS OR OTHER METHODS FOR USE IN CONSTRUCTION STAKEOUT OR ANY OTHER PURPOSE FOR THIS PROJECT. ANY DISCREPANCIES BETWEEN THE EXISTING HORIZONTAL OR VERTICAL DATA SHOWN ON THESE DRAWINGS AND THAT ENCOUNTERED IN THE FIELD MUST BE REPORTED TO THE DESIGN TEAM PRIOR TO CONSTRUCTION FOR RESOLUTION.

DEMOLITION NOTES

GENERAL:

1. THE CONTRACTOR SHALL INSPECT THE SITE THOROUGHLY AND FIELD-VERIFY THE LOCATION AND DEPTH OF ALL EXISTING UTILITIES. SOME UNDERGROUND UTILITIES MAY BE LOCATED DIFFERENTLY THAN SHOWN ON THIS PLAN. IN ADDITION, THERE MAY BE EXISTING UNDERGROUND UTILITIES PRESENT THAT ARE NOT SHOWN ON THIS PLAN. ALL CONTRACTORS USING THESE PLANS FOR DEMOLITION OR CONSTRUCTION SHALL CONFIRM ALL UTILITIES IN THE FIELD TO ESTABLISH LOCATIONS, SIZES, MATERIALS, AND ELEVATIONS. ANY DISCREPANCIES SHALL IMMEDIATELY BE BROUGHT TO THE ATTENTION OF THE ENGINEER AND THE CONSTRUCTION MANAGER.
2. THE CONTRACTOR IS RESPONSIBLE FOR CONTACTING "CALL BEFORE YOU DIG," EXCAVATING THE HOLES, AND PREPARING ANY ADDITIONAL RESEARCH OR INVESTIGATIONS REQUIRED IN ORDER TO ENSURE THAT PROPOSED UTILITIES TO REMAIN ARE PROTECTED FROM DAMAGE DURING DEMOLITION. ANY DAMAGE TO EXISTING UTILITIES TO REMAIN IS REQUIRED TO BE REPAIRED BY THE CONTRACTOR.
3. THE CONTRACTOR SHALL NOTIFY AND OBTAIN ALL SHUTOFFS FOR ALL APPLICABLE UTILITIES PRIOR TO THE COMMENCEMENT OF DEMOLITION.
4. THE CONTRACTOR SHALL LOCATE/CONFIRM ALL DRAINAGE INFRASTRUCTURE AND MAINTAIN ADEQUATE STORM DRAINAGE THROUGHOUT CONSTRUCTION.
5. THE CONTRACTOR SHALL FIELD LOCATE AND PROPERLY DISCONNECT APPROPRIATE LATERALS TO LIVE MAINS PRIOR TO DEMOLITION AND IN ACCORDANCE WITH UTILITY COMPANY STANDARDS.
6. THE CONTRACTOR SHALL MAINTAIN THE SAFETY AND PROTECTION OF BOTH PEDESTRIANS AND MOTORISTS. IT IS THE CONTRACTOR'S RESPONSIBILITY TO TAKE ALL NECESSARY PRECAUTIONARY AND PROTECTIVE MEASURES, INCLUDING SIGNS, LIGHTS, BARRIERS, FENCING AND TRAFFIC FLAGMEN.
7. THE CONTRACTOR SHALL BE RESPONSIBLE FOR OBTAINING ALL NECESSARY DEMOLITION ASSOCIATED PERMITS.
8. CONTRACTOR TO PROTECT AND MAINTAIN ALL UTILITIES TO REMAIN UNTIL TEMPORARY OR PERMANENT NEW LINES ARE INSTALLED.

DEMOLITION:

9. THE CONTRACTOR SHALL REMOVE AND LEGALLY DISPOSE OF ALL STRUCTURES WITHIN THE PROJECT LIMITS INDICATED TO BE REMOVED.
10. THE CONTRACTOR SHALL INCLUDE IN HIS BID ALL TEMPORARY FACILITIES AND SERVICES NECESSARY TO SATISFY FEDERAL, STATE, & LOCAL REQUIREMENTS INCLUDING BUT NOT LIMITED TO BRACING, SHORING, PAVEMENT REPAIR, FENCING, PEDESTRIAN AND VEHICLE ACCESS, CONCRETE PADS, ETC.

FOR PERMITTING ONLY - NOT FOR CONSTRUCTION

LANGAN

Project No. 140222801

Date	Description	No.

Revisions

STATE OF CONNECTICUT · TIMOTHY S. DUGAN · No. 25765 · LICENSED PROFESSIONAL ENGINEER

LANGAN
Langan Engineering and Environmental Services, Inc.
555 Long Wharf Drive
New Haven, CT 06511
T: 203.562.5771 F: 203.789.6142 www.langan.com

Project
RESTAURANT DEVELOPMENT AT EVERGREEN WALK
MAP No. 27, BLOCK No. 15, UNIT No. 2
601 EVERGREEN WAY
SOUTH WINDSOR
HARTFORD COUNTY CONNECTICUT

Drawing Title
MASTER LEGEND & NOTES

Project No. 140222801	Drawing No. CS002
Date 08/25/2021	
Drawn By IJAB	
Checked By DTG	Sheet of 1

© 2020 Langan

FOR PERMITTING ONLY - NOT FOR CONSTRUCTION

Date	Description	No.

Revisions

STATE OF CONNECTICUT
TIMOTHY S. ONDAK
No. 25769
LICENSED
PROFESSIONAL ENGINEER

LANGAN

Langan Engineering and
Environmental Services, Inc.

555 Long Wharf Drive
New Haven, CT 06511

T: 203.562.5771 F: 203.789.6142 www.langan.com

Project

RESTAURANT DEVELOPMENT AT EVERGREEN WALK

MAP No. 27, BLOCK No. 15, UNIT No. 2
601 EVERGREEN WAY
SOUTH WINDSOR
HARTFORD COUNTY CONNECTICUT

Drawing Title

KEY MAP

Project No.	Drawing No.
140222801	CS100
Date: 08/25/2021	
Drawn By: IJAB	
Checked By: DTG	Sheet of 1

LANGAN

Project No. 140222801

© 2020 Langan

NOTES:

1. LIMITS OF WETLANDS WERE DELINEATED BY ALL POINTS TECHNOLOGIES CORPORATION IN JULY 2021.
2. IMPERVIOUS COVERAGE WAS CALCULATED ONLY FOR THE PROJECT SITE AREA OF ±0.70 ACRES. PREVIOUSLY APPROVED VALUES WERE TAKEN FROM THE FINAL DEVELOPMENT PLAN PREPARED BY FUSS & O'NEILL DATED 05/08/2003 AND THE MASTER PLAN – GENERAL PLAN OF DEVELOPMENT PREPARED BY FLB ARCHITECTURE & PLANNING, INC. DATED 02/24/2014.
   PREVIOUSLY APPROVED IMPERVIOUS COVERAGE = ±0.51 ACRES / ±0.70 ACRES = ±72.5%
   PROPOSED IMPERVIOUS COVERAGE = ±0.51 ACRES / ±0.70 ACRES = ±72.5%

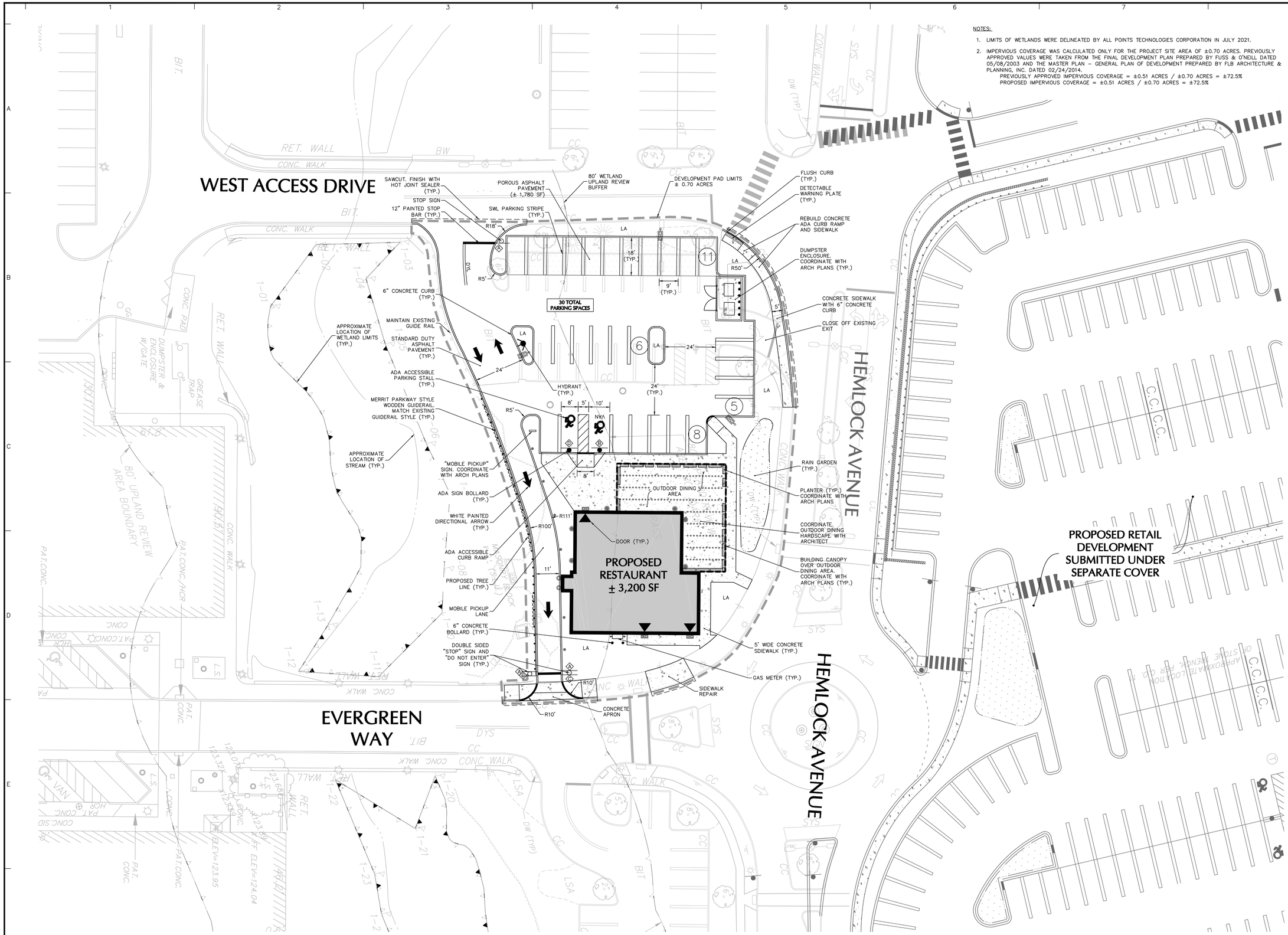

FOR PERMITTING ONLY - NOT FOR CONSTRUCTION

Date	Description	No.
Revisions		

LANGAN
Langan Engineering and Environmental Services, Inc.
555 Long Wharf Drive
New Haven, CT 06511
T: 203.562.5771 F: 203.789.6142 www.langan.com

Project
RESTAURANT DEVELOPMENT AT EVERGREEN WALK
MAP No. 27, BLOCK No. 15, UNIT No. 2
601 EVERGREEN WAY
SOUTH WINDSOR
HARTFORD COUNTY CONNECTICUT

Drawing Title
SITE PLAN

Project No. 140222801
Date 08/25/2021
Drawn By IJAB
Checked By DTG
Drawing No. CS101
Sheet 0 of 1

Project No. 140222801

© 2020 Langan

Date: 8/25/2021 Time: 17:06 User: ibrown Style Table: Langan.stb Layout: CS101 Document Code: 140222801-0507-CS101-0101

ASPHALT SECTION	SURFACE COURSE - 'X'	BINDER COURSE - 'Y'	SUBBASE - 'Z'
STANDARD DUTY	1.5 INCHES	2 INCHES	6 INCHES

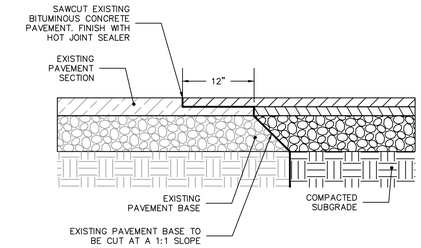

NOTES:
1. CONTRACTOR TO INSTALL TACK COAT ON ALL BUTT EDGES OF EXISTING PAVEMENT

1 SAW CUT PAVEMENT SECTION
N.T.S

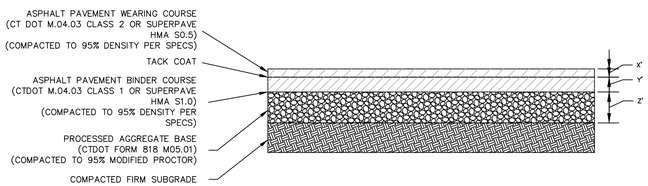

NOTES:
1. PRIOR TO ANY PAVING ACTIVITIES, THE SUBGRADE OR SUBBASE SHALL BE PROOF ROLLED.
2. PAVING BASECOURSE SHALL BE CONSTRUCTED IN LAYERS NOT LESS THAN 2 INCHES AND NOT MORE THAN 5 INCHES THICK PER LIFT.
3. ALL AREAS TO BE PAVED SHALL BE PROOFROLLED WITH AT LEAST 4 PASSES OF EITHER A SMOOTH ROLLER HAVING A MINIMUM STATIC DRUM WEIGHT OF 5–TONS OR A FULLY LOADED TANDEM DUMP TRUCK. ANY SOFT AREAS SHALL BE REMOVED AND REPLACED WITH CLEAN, GRANULAR, FREE–DRAINING SOIL. FILL SHALL BE PLACED IN LOOSE LIFTS NOT TO EXCEED 12–INCHES AND SHALL BE COMPACTED TO AT LEAST 95% OF ITS MAXIMUM DRY DENSITY AS DETERMINED BY ASTM D–1557.
4. PAVEMENT CLASSES REFER TO CONNECTICUT, DEPARTMENT OF TRANSPORTATION, STANDARD SPECIFICATION FOR ROADS, BRIDGES AND INCIDENTAL CONSTRUCTION, FORM 818, DATED 2020.
5. PAVEMENT DESIGN SHALL CONFORM TO TOWN OF SOUTH WINDSOR STANDARD DETAILS AND IS SUBJECT TO CHANGE PER TOWN AND GEOTECHNICAL ENGINEER'S RECOMMENDATIONS.

2 ON-SITE ASPHALT PAVEMENT SECTION
N.T.S.

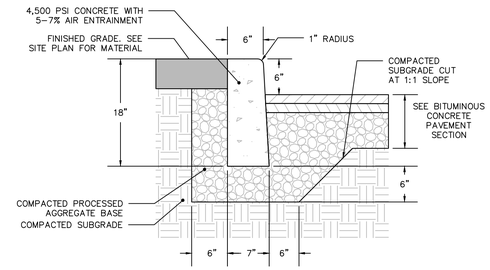

NOTES:
1. TRANSVERSE JOINTS 1/2" WIDE SHALL BE INSTALLED IN THE CAST–IN–PLACE CURB 20'–0" APART AND SHALL BE FILLED WITH PREFORMED BITUMINOUS JOINT FILLER.
2. FOR CAST–IN–PLACE CURB, EXPOSED CONCRETE SURFACE IS TO BE RUBBED TO PROVIDE SMOOTH FINISHED SURFACE.

3 CONCRETE CURB
N.T.S

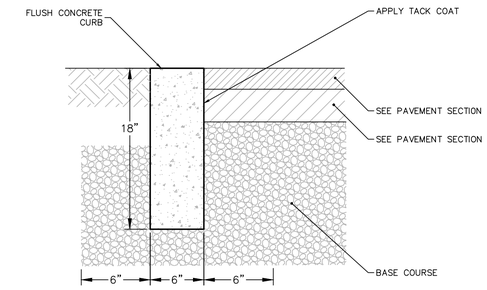

NOTE: CONCRETE TO TEST 4,500 PSI MINIMUM ON 28 DAY TEST.

4 FLUSH CURB
N.T.S

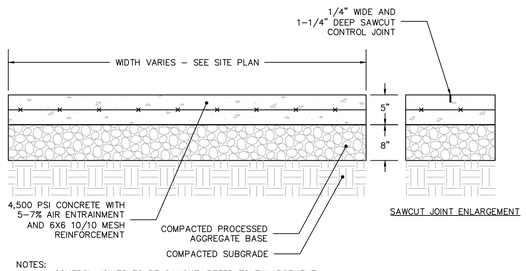

NOTES:
1. ALL CONTROL JOINTS TO BE SAWCUT, REFER TO ENLARGEMENT
2. SIDEWALKS TO COMPLY WITH TOWN STANDARDS WHERE APPLICABLE.
3. EXPANSION AND CONTROL JOINTS SHALL BE INSTALLED PER LAYOUT AND DIMENSIONING PLANS. IF NOT SPECIFICALLY DETAILED MAXIMUM SPACING OF JOINTS SHALL BE AS FOLLOWS:
   EXPANSION – 20 FT.
   CONTROL – 5 FT.
4. CONTROL JOINTS SHALL BE SPACED EQUAL TO THE WIDTH BUT SHALL NOT EXCEED 6 FT. CARE SHALL BE TAKEN TO ASSURE UNIFORM GRADE, FREE OF SAGS AND SHORT GRADE CHANGES.
5. SURFACE TEXTURE SHALL BE A LIGHT BROOMING, TRANSVERSE TO THE LENGTH OF THE WALK.
6. CONTRACTOR TO PROVIDE 10'x10' MOCKUP SHOWING EXPANSION JOINTS, SAWCUT JOINTS, AND BROOM FINISH PRIOR TO INSTALLATION

5 ON GRADE CONCRETE SIDEWALK
N.T.S

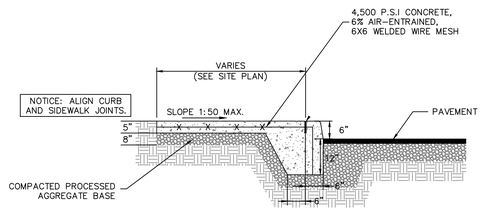

6 MONOLITHIC CONCRETE CURB/SIDEWALK
N.T.S.

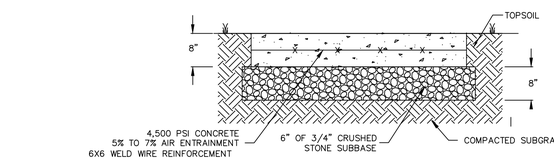

NOTES:
1. SURFACE TEXTURE SHALL BE A LIGHT BROOMING, CARE SHALL BE TAKEN TO ASSURE UNIFORM GRADE, FREE OF SAGS AND SHORT GRADE CHANGES.
2. SEE CS100 SERIES PLAN SHEETS FOR LOCATION AND DIMENSIONS

7 CONCRETE PAD
N.T.S

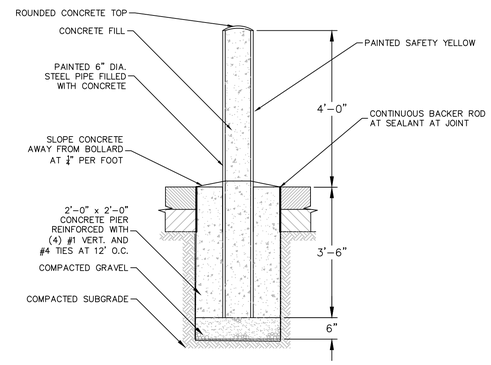

NOTES:
1. COLOR TO BE SAFETY YELLOW WITH REFLECTIVE STRIPES.

8 BOLLARD
N.T.S

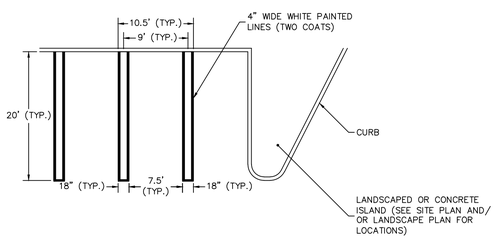

NOTES:
ALL PAINT SHALL BE SHERWIN–WILLIAMS "SETFAST" PAINT, #TM2160 – WHITE
APPLY 2 COATS OF TRAFFIC TYPE PAINT. APPLY THE FIRST COAT NOT LESS THAN 5 DAYS AFTER THE PLACING OF BITUMINOUS PAVEMENT APPLY SECOND COAT JUST PRIOR TO BUILDING OPENING.

10 PARKING STALL STRIPING
N.T.S

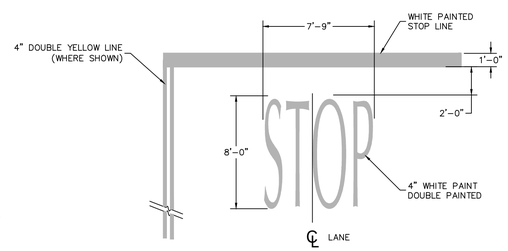

NOTES:
1. PAVEMENT MARKING TO BE INSTALLED AT EACH STOP BAR LOCATION SHOWN ON THE PLANS, EXCLUDING ROADWAYS.

11 STOP BAR
N.T.S

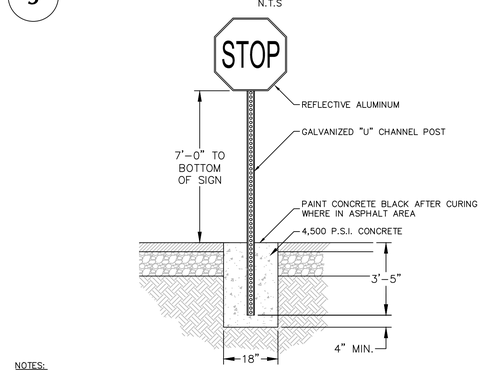

NOTES:
1. ALL POSTS SHALL BE OF ADEQUATE LENGTH TO MEET THE REQUIREMENTS FOR ERECTION AS STATED IN THE CURRENT "MANUAL ON UNIFORM TRAFFIC CONTROL DEVICES FOR STREETS AND HIGHWAYS".
2. ALL POSTS SHALL BE EMBEDDED 4'–6" MINIMUM BELOW GRADE.
3. ALL STEEL POSTS AND BRACKETS SHALL BE CUT, BENT, AND HOLES PUNCHED AND DRILLED BEFORE GALVANIZING. GALVANIZING SHALL BE IN CONFORMANCE WITH CURRENT A.S.T.M. SPECIFICATION A123–78 (OR LATEST REVISED).
4. POSTS SHALL BE BREAKAWAY TYPE II TWO–PIECE U–POST OR OTHER BREAKAWAY STRUCTURAL SUPPORT HARDWARE AS NOTED IN THE LATEST EDITION OF AASHTO'S "SPECIFICATIONS FOR STRUCTURAL SUPPORTS FOR HIGHWAY SIGNS, LUMINARIES, AND TRAFFIC SIGNALS."
5. SIGN PANEL SIZES SHALL DETERMINE POST TYPE AND NUMBERS AS SHOWN ON THIS DETAIL AND DIRECTIONAL SIGN SHEET.
6. BOLTS SHALL NOT PROTRUDE MORE THAN 3/4" BEYOND THE NUT WHEN TIGHT BUT SHALL ENGAGE ALL THREADS IN THE NUT.
7. ALL TRAFFIC AND PEDESTRIAN SIGNAGE AND LOCATION SHALL BE IN ACCORDANCE WITH THE MANUAL ON UNIFORM TRAFFIC CONTROL DEVICES AND ALL CURRENT AMENDMENTS.

9 SIGN DETAIL
N.T.S

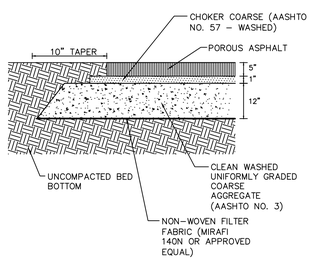

NOTES

1. BITUMINOUS SURFACE SHALL BE LAID WITH A BITUMINOUS MIX OF 5.75% TO 6% BY WEIGHT DRY AGGREGATE. IN ACCORDANCE WITH ASTM D6390. DRAIN DOWN OF THE BINDER SHALL BE NO GREATER THAN 0.3%. AGGREGATE GRAIN IN THE ASPHALT SHALL BE A MINIMUM 90% CRUSHED MATERIAL AND HAVE THE FOLLOWING GRADATION:

POROUS ASPHALT GRADATION		
U.S. STANDARD SIEVE SIZE	PARTICLE SIZE (IN)	PASSING SIEVE (%)
1/2 INCH	0.5"	100
3/8 INCH	0.375"	92–98
NO. 4	0.187"	34–40
NO. 8	0.0935"	14–20
NO. 16	0.0469"	7–13
NO. 30	0.0059"	0–4
NO. 200	0.0029"	0–2

2. NEAT ASPHALT BINDER MODIFIED WITH AN ELASTOMERIC POLYMER TO PRODUCE A BINDER MEETING THE REQUIREMENTS OF PG 76–22 AS SPECIFIED IN AASHTO MP–1. THE ELASTOMER POLYMER SHALL BE STYRENE–BUTADIENE–STYRENE (SBS), OR APPROVED EQUAL, APPLIED AT A RATE OF 3% BY WEIGHT OF THE TOTAL BINDER.
3. HYDRATED LIME SHOULD BE ADDED AT A DOSAGE RATE OF 1% BY WEIGHT OF THE TOTAL DRY AGGREGATE TO MIXES CONTAINING GRANITE. HYDRATED LIME SHALL MEET THE REQUIREMENTS OF AASTM C 977. THE ADDITIVE MUST BE ABLE TO PREVENT THE SEPARATION OF THE ASPHALT BINDER FROM THE AGGREGATE AND ACHIEVE A REQUIRED TENSILE STRENGTH RATIO (TSR) OF AT LEAST 80% ON THE ASPHALT MIX WHEN TESTED IN ACCORDANCE WITH AASHTO T 283. THE ASPHALTIC MIX SHALL BE TESTED FOR ITS RESISTANCE TO STRIPPING BY WATER IN ACCORDANCE WITH ASTM D–1664. IF THE ESTIMATED COATING AREA IS NOT ABOVE 95 PERCENT, ANTI–STRIPPING AGENTS SHALL BE ADDED TO THE ASPHALT.
4. THE ASPHALTIC MIX SHALL BE TESTED FOR ITS RESISTANCE TO STRIPPING BY WATER IN ACCORDANCE WITH ASTM D–3625. IF THE ESTIMATED COATING AREA IS NOT ABOVE 95 PERCENT, ANTI–STRIPPING AGENTS SHALL BE COATED TO THE ASPHALT.

12 PERMEABLE PAVEMENT
N.T.S

FOR PERMITTING ONLY - NOT FOR CONSTRUCTION

Date	Description	No.
Revisions		

LANGAN
Langan Engineering and Environmental Services, Inc.
555 Long Wharf Drive
New Haven, CT 06511
T: 203.562.5771 F: 203.789.6142 www.langan.com

Project
RESTAURANT DEVELOPMENT AT EVERGREEN WALK
MAP No. 27, BLOCK No. 15, UNIT No. 2
601 EVERGREEN WAY
SOUTH WINDSOR
HARTFORD COUNTY CONNECTICUT

Drawing Title
SITE DETAILS I

Project No. 140222801	Drawing No. CS501
Date 08/25/2021	
Drawn By CMD	
Checked By DTG	Sheet 0 of 1

© 2020 Langan

LANGAN
Project No. 140222801

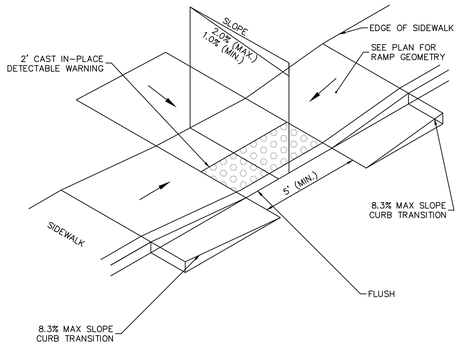

NOTES:

1. MAXIMUM SLOPES OF ADJOINING GUTTERS AND ROAD SURFACES IMMEDIATELY ADJACENT TO THE SIDEWALK RAMP OR ACCESSIBLE ROUTE SHOULD NOT EXCEED 20:1.
2. CARE SHALL BE TAKEN TO ASSURE UNIFORM GRADE ON THE RAMP, FREE OF SAGS AND ABRUPT GRADE CHANGES.
3. ALL RAMPS SHALL BE CONSTRUCTED OF CLASS "C" CONCRETE IN ACCORDANCE WITH CONNECTICUT STANDARD SPECIFICATIONS ARTICLE M.03.01.
4. SIDEWALK RAMPS SHALL HAVE A COARSE BROOM FINISH TRANSVERSE TO THE SLOPE OF THE RAMP.
5. DIAGONAL SIDEWALK RAMPS AT MARKED CROSSINGS SHALL BE WHOLLY CONTAINED WITHIN THE MARKINGS, EXCLUDING ANY FLARED SIDES.
6. REMOVAL OF EXISTING SIDEWALK FOR NEW RAMP INSTALLATIONS SHALL BE TO THE NEAREST EXPANSION / CONTRACTION JOINT OR DUMMY JOINT. 12:1 MAY NOT BE ACHIEVABLE DUE TO SIDEWALK GRADE. IN RECOGNITION OF THIS, A MINIMUM LIMIT OF 15' (4.57m) FOR A PARALLEL RAMP SHALL BE USED. REMOVAL SHALL NOT BE FURTHER THAN 2' (610) FROM THE PROPOSED RAMP UNLESS DIRECTED BY THE ENGINEER. SAW CUT REQUIRED FOR DUMMY JOINTS SHALL BE INCLUDED IN THE COST OF "CONCRETE SIDEWALK".
7. EXPANSION JOINTS IN CONCRETE SHALL MATCH THOSE IN ADJACENT SIDEWALKS BUT IN NO CASE SHALL THE SPACING BETWEEN EXPANSION JOINTS EXCEED 12' (3.66m) UNLESS OTHERWISE NOTED.
8. RAISED MEDIAN ISLANDS IN MARKED CROSSINGS SHALL HAVE SIDEWALK RAMPS AT BOTH SIDES AND A LEVEL AREA AT LEAST 4' (1219) LONG BETWEEN THE RAMPS. IF THIS CAN NOT BE ACHIEVED, THE RAISED ISLAND SHALL BE CUT THROUGH LEVEL WITH THE ROADWAY AS SHOWN ON THE PLANS OR AS DIRECTED BY THE ENGINEER.
9. SIDEWALK RAMPS, WHEN CONSTRUCTED IN CONJUNCTION WITH SIDEWALK, SHALL BE PAID FOR UNDER THE ITEM "CONCRETE SIDEWALK", INCLUDING CURBING WITHIN THE LIMITS OF THE NEW SIDEWALK RAMP AND DETECTABLE WARNING STRIPS.WHEN JUST A SIDEWALK RAMP IS CONSTRUCTED, IT SHALL BE PAID FOR UNDER THE ITEM "SIDEWALK RAMP" INCLUDING CURBING WITHIN THE LIMITS OF THE NEW SIDEWALK AND DETECTABLE WARNING STRIP.
10. CURBING WITHIN THE LIMITS OF THE NEW SIDEWALK RAMP SHALL BE CONSTRUCTED IN CONFORMANCE WITH THE REQUIREMENTS OF FORM 816 SECTIONS 8.11 AND 8.13.
11. TRANSITION TO FULL HEIGHT CURB. INSTALL STONE CURBING IF ADJACENT CURBING IS STONE. INSTALL CONCRETE CURBING IF ADJACENT CURBING IS CONCRETE OR BITUMINOUS.
12. DETECTABLE WARNING STRIPS ARE NOT REQUIRED. IF INCLUDED, INSTALL THE EDGE OF THE DETECTABLE WARNING STRIP 6" (152) FROM THE EDGE OF ROAD.
13. TO PERMIT WHEELCHAIR WHEELS TO ROLL BETWEEN DOMES, ALIGN DOMES ON A SQUARE GRID IN THE DIRECTION OF PEDESTRIAN TRAVEL.
14. THE MAXIMUM HEIGHT OF ANY RAMP WITHOUT HANDRAILS SHALL BE 6".

1 ADA ACCESSIBLE RAMP

N.T.S.

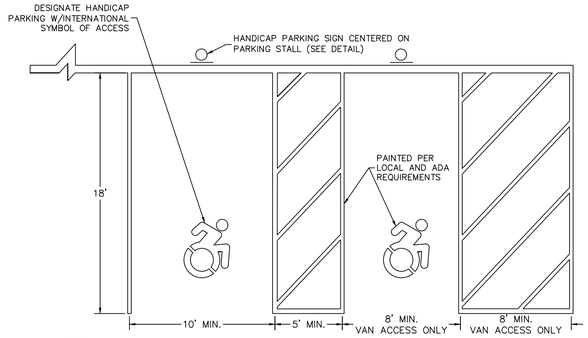

NOTES:

1. ALL PAINT SHALL BE FAST DRYING TRAFFIC PAINT, MEETING THE REQUIREMENTS OF AASHTO M248 TYPE F, PAINT SHALL BE APPLIED AS SPECIFIED BY THE MANUFACTURER.
2. SYMBOLS & PARKING STALLS SHALL CONFORM TO THE REQUIREMENTS OF THE AMERICAN DISABILITIES ACT (ADA) AND THE MANUAL ON UNIFORM TRAFFIC CONTROL DEVICES, LATEST EDITION.
3. APPLY TWO COATS OF TRAFFIC PAINT. ALLOW FOR A MINIMUM CURE TIME OF 24 HOURS BETWEEN APPLICATIONS.

2 HANDICAP PARKING STALL STRIPING

N.T.S.

NOTES:

1. ALL POSTS SHALL BE OF ADEQUATE LENGTH TO MEET THE REQUIREMENTS FOR ERECTION AS STATED IN THE CURRENT "MANUAL ON UNIFORM TRAFFIC CONTROL DEVICES FOR STREETS AND HIGHWAYS".
2. ALL POSTS SHALL BE EMBEDDED 4'-6" MINIMUM BELOW GRADE.
3. ALL STEEL POSTS AND BRACKETS SHALL BE CUT, BENT, AND HOLES PUNCHED AND DRILLED BEFORE GALVANIZING. GALVANIZING SHALL BE IN CONFORMANCE WITH CURRENT A.S.T.M. SPECIFICATION A123-78 (OR LATEST REVISED).
4. POSTS SHALL BE BREAKAWAY TYPE II TWO-PIECE U-POST OR OTHER BREAKAWAY STRUCTURAL SUPPORT HARDWARE AS NOTED IN THE LATEST EDITION OF AASHTO'S "SPECIFICATIONS FOR STRUCTURAL SUPPORTS FOR HIGHWAY SIGNS, LUMINARIES, AND TRAFFIC SIGNALS."
5. SIGN PANEL SIZES SHALL DETERMINE POST TYPE AND NUMBERS AS SHOWN ON THIS DETAIL AND DIRECTIONAL SIGN SHEET.
6. BOLTS SHALL NOT PROTRUDE MORE THAN 3/4" BEYOND THE NUT WHEN TIGHT BUT SHALL ENGAGE ALL THREADS IN THE NUT.

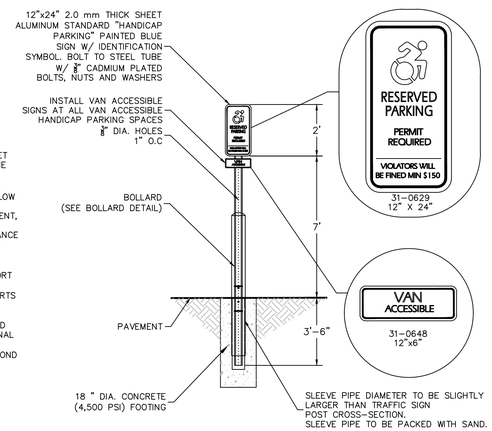

HANDICAPPED PARKING SIGN SHALL CONFORM WITH CURRENT STATE & LOCAL CODES AND REGULATIONS.

3 ADA SIGN BOLLARD

N.T.S.

FOR PERMITTING ONLY - NOT FOR CONSTRUCTION

20 0 5 10 20
SCALE IN FEET

Date	Description	No.

Revisions

STATE OF CONNECTICUT
DOTTA S. CHUNG
No. 25781
LICENSED PROFESSIONAL ENGINEER

LANGAN
Langan Engineering and Environmental Services, Inc.
555 Long Wharf Drive
New Haven, CT 06511
T: 203.562.5771 F: 203.789.6142 www.langan.com

Project
RESTAURANT DEVELOPMENT AT EVERGREEN WALK
MAP No. 27, BLOCK No. 15, UNIT No. 2
601 EVERGREEN WAY
SOUTH WINDSOR
HARTFORD COUNTY CONNECTICUT

Drawing Title
SITE DETAILS II

Project No. 140222801
Date 08/25/2021
Drawn By IJAB
Checked By DTG
Drawing No. CS502
Sheet 0 of 1

LANGAN
Project No. 140222801

© 2020 Langan

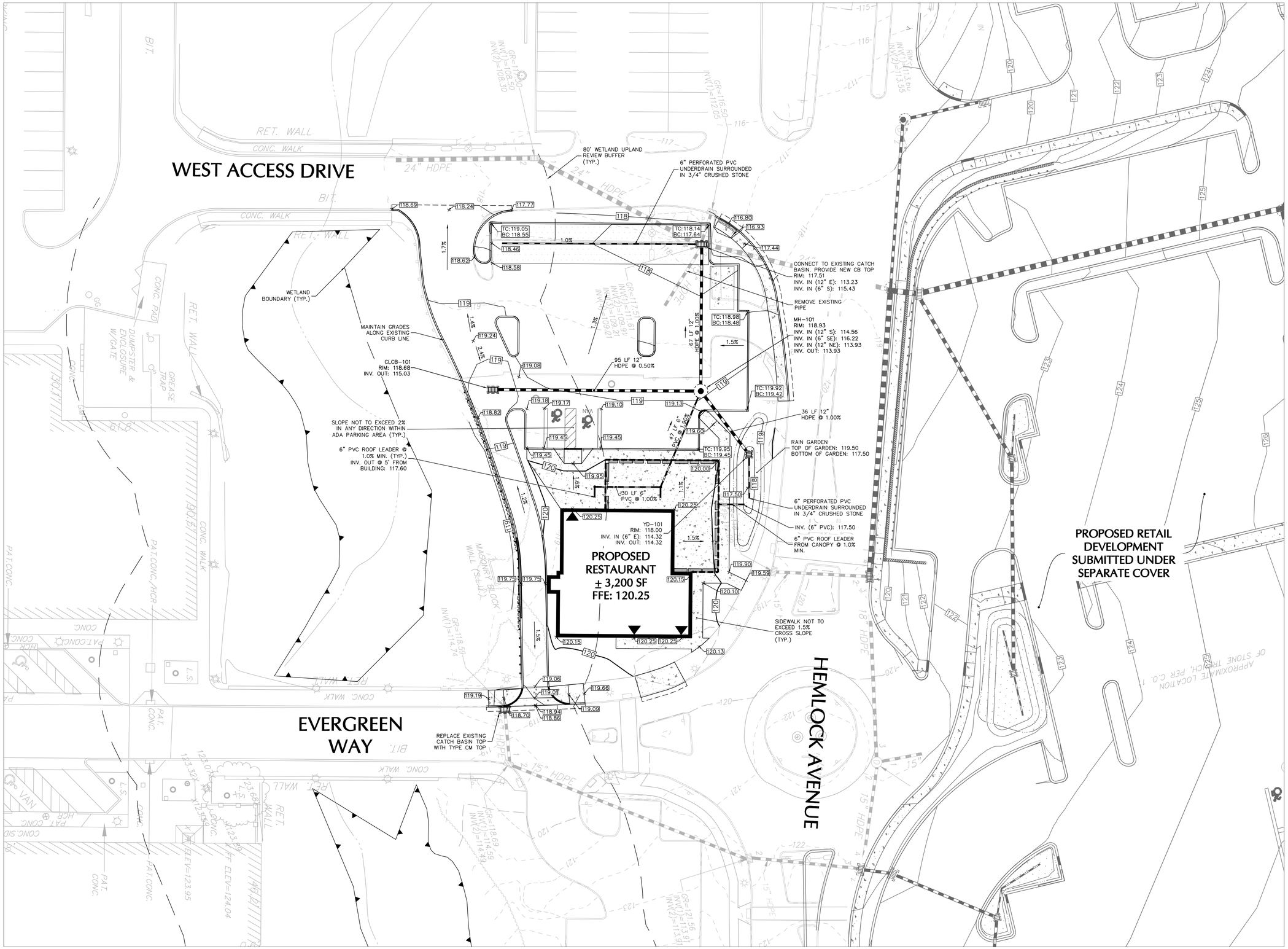

FOR PERMITTING ONLY - NOT FOR CONSTRUCTION

Date	Description	No.

Revisions

STATE OF CONNECTICUT ANTHONY S. ONOFRI No. 25780 LICENSED PROFESSIONAL ENGINEER

LANGAN

Langan Engineering and Environmental Services, Inc.

555 Long Wharf Drive
New Haven, CT 06511

T: 203.562.5771 F: 203.789.6142 www.langan.com

Project

RESTAURANT DEVELOPMENT AT EVERGREEN WALK

MAP No. 27, BLOCK No. 15, UNIT No. 2
601 EVERGREEN WAY
SOUTH WINDSOR
HARTFORD COUNTY CONNECTICUT

Drawing Title

GRADING & DRAINAGE PLAN

Project No.	Drawing No.
140222801	CG101
Date: 08/25/2021	
Drawn By: IJAB	
Checked By: DTG	Sheet 0 of 1

Project No. 140222801

© 2020 Langan

TOWN OF SOUTH WINDSOR
STANDARD DETAIL
MARCH, 2005

REVISED:

TYPE "C-L" CATCH BASIN

APPROVED
PUBLIC WORKS DIRECTOR

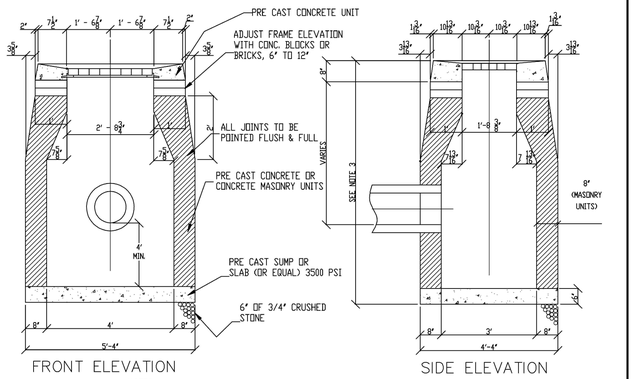

NOTES:

1. MINIMUM COVER OVER TOP OF PIPE SHALL BE 2'-0".
2. WALL THICKNESS SHALL BE SUFFICIENT TO MEET HS-20 LOADING.
3. WALL THICKNESS FOR STRUCTURES OVER 10' HIGH IS 12" FOR CONCRETE BLOCK UNITS. INSIDE DIMENSIONS REMAIN THE SAME.
4. ALL PIPES SHALL BE CUT FLUSH WITH INSIDE WALLS.
5. ALL BRICKS SHALL BE CONCRETE.
6. ALL PIPE PENETRATIONS SHALL BE PARGED SMOOTH TO PROVIDE A WATERTIGHT SEAL BOTH INSIDE AND OUTSIDE THE BASIN.
7. INSIDE WALLS OF STRUCTURE TO BE SMOOTH. NO SHELVES ALLOWED.
8. IF 4' SUMP IS NOT POSSIBLE DUE TO UTILITY CONFLICTS OR SITE CONSTRAINTS, A 2' SUMP MAY BE SUBMITTED FOR THE TOWN ENGINEERS APPROVAL.
9. FRAME AND GRATE SHALL BE GALVANIZED.

NOT TO SCALE

1 TYPE C-L CATCH BASIN
N.T.S

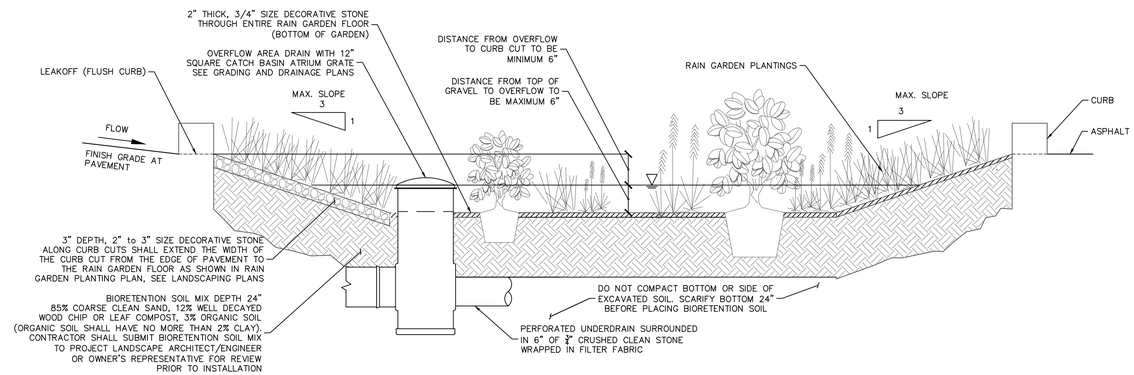

2 RAIN GARDEN
N.T.S

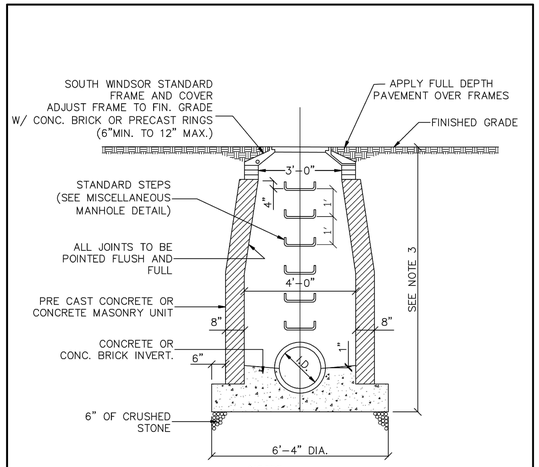

NOTES:

1. MINIMUM COVER OVER TOP OF PIPE SHALL BE 2'-0".
2. WALL THICKNESS SHALL BE SUFFICIENT TO MEET HS 20 LOADING.
3. WALL THICKNESS FOR STRUCTURES OVER 10' HIGH IS 12" FOR CONCRETE BLOCK UNITS. INSIDE DIMENSIONS REMAIN THE SAME.
4. ALL PIPES SHALL BE CUT FLUSH WITH INSIDE WALLS.

NOT TO SCALE

TOWN OF SOUTH WINDSOR STANDARD DETAIL	STORM MANHOLE	APPROVED
MARCH, 2005	REVISED:	PUBLIC WORKS DIRECTOR

3 STORM MANHOLE
N.T.S

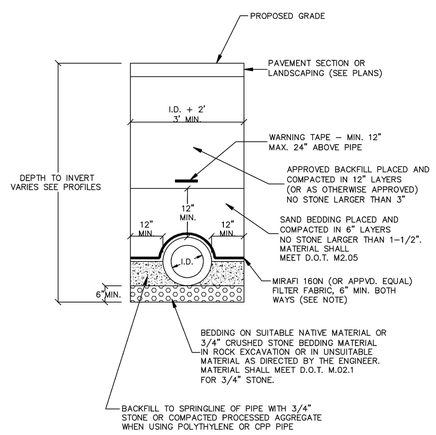

NOT TO SCALE

TOWN OF SOUTH WINDSOR STANDARD DETAIL	STORM DRAIN TRENCH DETAIL	APPROVED
MARCH, 2005	REVISED:	PUBLIC WORKS DIRECTOR

4 STORM PIPE-BEDDING DETAIL
N.T.S

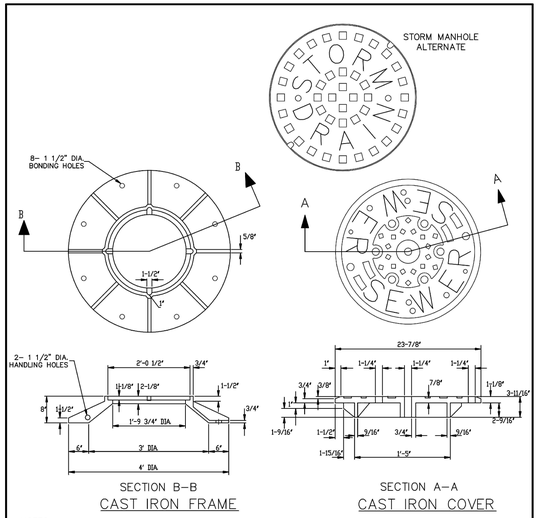

NOTES:

1. THE LOWER SURFACE OF THE COVER AND THE CORRESPONDING UPPER SURFACE OF THE FRAME SHALL BE MACHINE FINISHED TO PROVIDE A SMOOTH FLAT CONTACT OR FIT, WITHOUT ANY TENDENCY FOR THE COVER TO ROCK OR RATTLE.
2. SANITARY SEWER MANHOLES SHALL BE EQUIPPED WITH VENT HOLE IN CENTER.

NOT TO SCALE

TOWN OF SOUTH WINDSOR STANDARD DETAIL	CAST IRON MANHOLE FRAME AND COVER	APPROVED
MARCH, 2005	REVISED:	PUBLIC WORKS DIRECTOR

5 MANHOLE FRAME & COVER
N.T.S

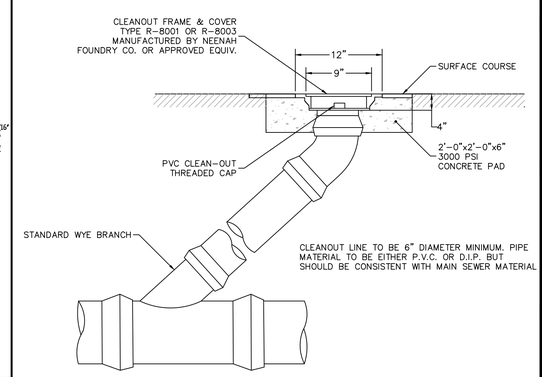

NOTES:
1. THE CONTRACTOR SHALL PROVIDE ALL APPROPRIATE AND NECESSARY FITTING AND ADAPTORS.

6 CLEANOUT
N.T.S

FOR PERMITTING ONLY - NOT FOR CONSTRUCTION

Date	Description	No.

Revisions

STATE OF CONNECTICUT TIMOTHY S. CHAGNON No. 25765 LICENSED PROFESSIONAL ENGINEER

LANGAN
Langan Engineering and Environmental Services, Inc.
555 Long Wharf Drive
New Haven, CT 06511
T: 203.562.5771 F: 203.789.6142 www.langan.com

Project
RESTAURANT DEVELOPMENT AT EVERGREEN WALK
MAP No. 27, BLOCK No. 15, UNIT No. 2
601 EVERGREEN WAY
SOUTH WINDSOR
HARTFORD COUNTY CONNECTICUT

Drawing Title
GRADING & DRAINAGE DETAILS I

Project No.	Drawing No.
140222801	CG501
Date: 08/25/2021	
Drawn By: IJAB	
Checked By: DTG	Sheet 0 of 1

LANGAN
Project No. 140222801

© 2020 Langan

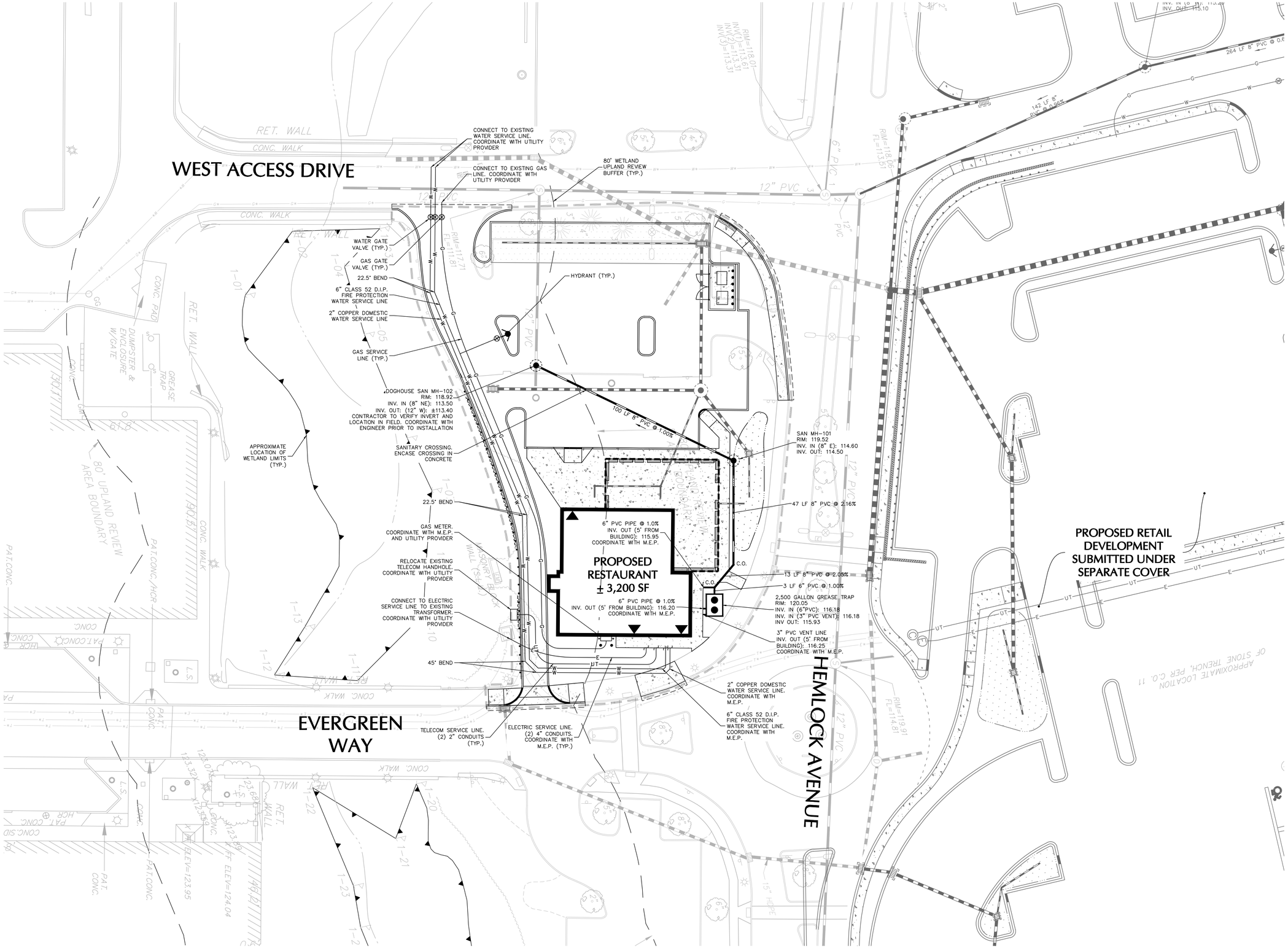

FOR PERMITTING ONLY - NOT FOR CONSTRUCTION

Date	Description	No.

Revisions

STATE OF CONNECTICUT TIMOTHY S. ONDICK No. 25768 LICENSED PROFESSIONAL ENGINEER

LANGAN

Langan Engineering and Environmental Services, Inc.

555 Long Wharf Drive
New Haven, CT 06511

T: 203.562.5771 F: 203.789.6142 www.langan.com

Project

RESTAURANT DEVELOPMENT AT EVERGREEN WALK

MAP No. 27, BLOCK No. 15, UNIT No. 2
601 EVERGREEN WAY
SOUTH WINDSOR
HARTFORD COUNTY CONNECTICUT

Drawing Title

UTILITY PLAN

Project No.	Drawing No.
140222801	CU101
Date: 08/25/2021	
Drawn By: IJAB	
Checked By: DTG	Sheet 0 of 1

LANGAN

Project No. 140222801

© 2020 Langan

Date: 8/25/2021 Time: 17:09 User: ibrown Style Table: Langan.stb Layout: CU101 Document Code: 140222801-0507-CU101-0101

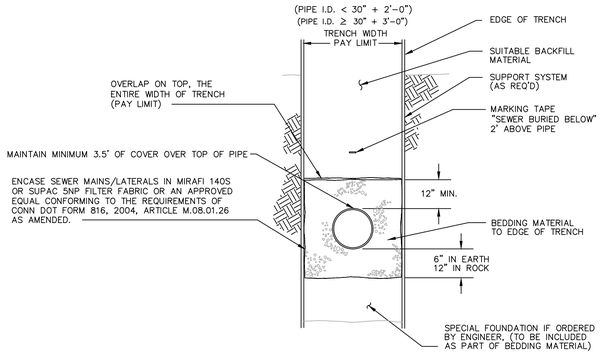

NOTE:

MAXIMUM PAY WIDTH FOR BEDDING MATERIAL & TRENCH EXCAVATION IS I.D + 2'-0" FOR I.D. LESS THAN 30", I.D. + 3'-0" FOR EQUAL TO OR GREATER 30".

1 SANITARY TRENCH
N.T.S

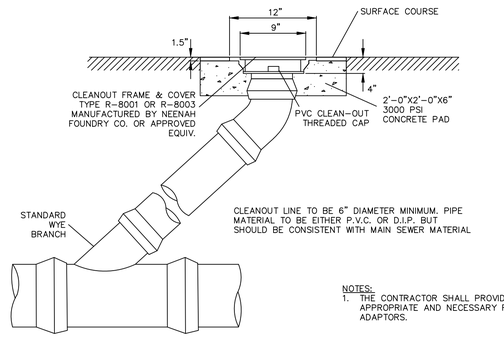

NOTES:
1. THE CONTRACTOR SHALL PROVIDE ALL APPROPRIATE AND NECESSARY FITTING AND ADAPTORS.

2 SANITARY CLEANOUT
N.T.S

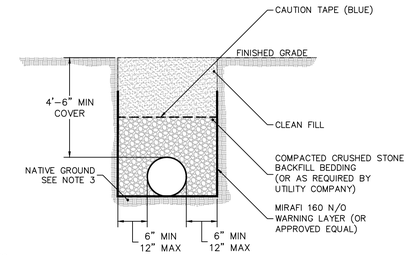

NOTES:
1. TRENCHES IN STABLE SOIL OVER 5 FT DEEP SHALL BE REINFORCED BY APPROVED OSHA METHODS.
2. TRENCHES SHALL BE COMPACTED.
3. IF NATIVE GROUND IS NOT SUITABLE, THE CONTRACTOR SHALL EXCAVATE TO AN ACCEPTABLE DEPTH AND INSTALL MATERIALS AS APPROVED BY ENGINEERS AND UTILITY COMPANY.
4. THE WARNING LAYER IS NOT REQUIRED IN AREAS OF THE SITE WHERE SOIL IS CLASSIFIED AS REGULATED MATERIAL. WHERE INSTALLED, WARNING LAYER SHALL EXTEND UP THE SIDES OF THE EXCAVATION TO MATCH WITH THE HORIZONTAL LINER.

3 WATER MAIN TRENCH
N.T.S

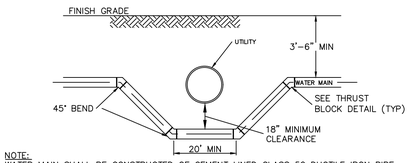

NOTE:
WATER MAIN SHALL BE CONSTRUCTED OF CEMENT LINED CLASS 52 DUCTILE IRON PIPE OR BETTER. ONE FULL LENGTH OF WATER MAIN SHOULD BE CENTERED UNDER THE CROSS PIPE SO THAT BOTH JOINTS WILL BE AS FAR FROM THE CROSSING AS POSSIBLE.

4 WATER MAIN DROP
N.T.S

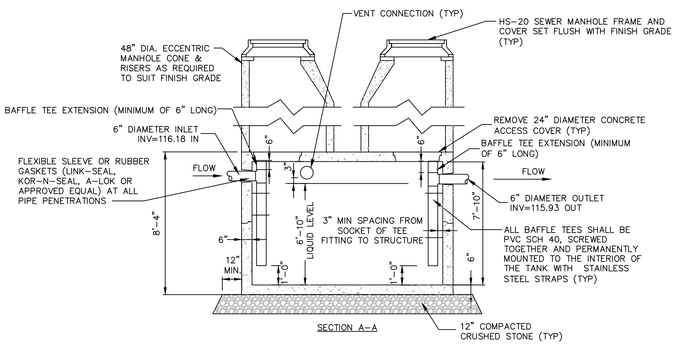

NOTES:

1. MANHOLE FRAME AND COVERS SHALL BE OF HEAVY DUTY DESIGN, GRAY IRON CASTING , AND SHALL HAVE THE WORD "SEWER" PLAINLY CAST INTO THE CENTER OF EACH OTHER IN 3 IN (MIN. HEIGHT) LETTERS.
2. ALL COMPONENTS, TANK, RISERS, MANHOLE FRAMES, & COVERS SHALL BE DESIGNED TO MEET ASTM C858 AND ACI 318 WITH AASHTO HS-20 LOADING.
3. ALL BAFFLE TEES SHALL BE PVC, AND FASTENED WITH STAINLESS STEEL HARDWARE.
4. ALL BAFFLE TEES SHALL BE PROVIDED WITH EXTENSIONS (MINIMUM OF 6" LONG).
5. FILL WITH WATER BEFORE REMOVAL OF DEWATERING MEASURES.
6. THE GREASE TRAP SHALL BE VENTED AS REQUIRED BY CODE. COORDINATE VENT LOCATION WITH ARCHITECTURAL DRAWINGS.
7. CONCRETE – 5,000 PSI (MIN.) STRENGTH AT 28 DAYS.
8. STEEL REINFORCEMENT – ASTM A-615, GRADE 60.
9. COVER TO STEEL – 1" MINIMUM.
10. SEAL CONSTRUCTION JOINTS WITH DOUBLE LAYER OF 1" DIAMETER BUTYL RUBBER OR EQUIVALENT.
11. THE ENTIRE EXTERIOR SURFACE OF THE GREASE TRAP SHALL BE COATED WITH TWO COATS OF AN APPROVED BITUMASTIC MATERIAL TO PRODUCE A DRY FILM THICKNESS OF 0.07 INCHES (7 MILS) PER COAT.

5 2500 GALLON GREASE TRAP - FOR REFERENCE ONLY
N.T.S

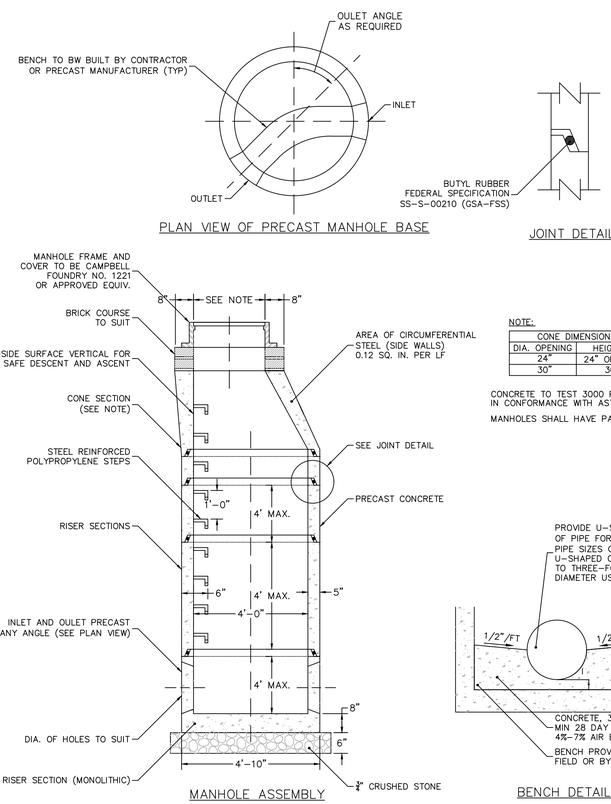

NOTE:

CONE DIMENSIONS	
DIA. OPENING	HEIGHT
24"	24" OR 36"
30"	36"

CONCRETE TO TEST 3000 P.S.I. AT 28 DAYS IN CONFORMANCE WITH ASTM C-478-68

MANHOLES SHALL HAVE PAVED INVERTS.

7 SANITARY SEWER MANHOLE
N.T.S

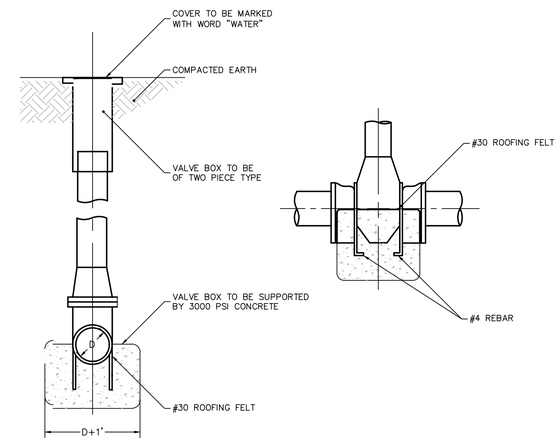

7 WATER GATE VALVE
N.T.S

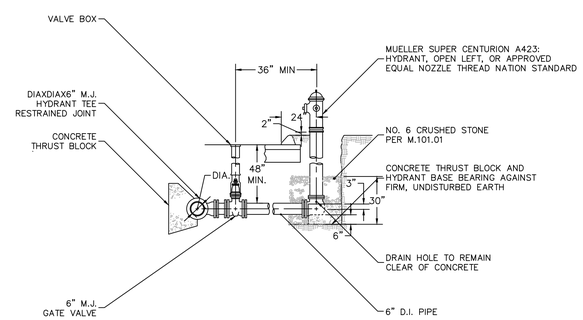

NOTES:
1. ALL MECHANICAL JOINTS TO BE RESTRAINED WITH MEGALUG RETAINER GLANDS.
2. FIRE HYDRANTS SHALL HAVE 5-1/4" MAIN VALVE OPENING, 2 – 2-1/2" HOSE NOZZLES, 1 – 4-1/2" PUMPER NOZZLE AND A 6" M.J. INLET SHOE.

8 FIRE HYDRANT ASSEMBLY
N.T.S

FOR PERMITTING ONLY - NOT FOR CONSTRUCTION

20 0 5 10 20
SCALE IN FEET

Date	Description	No.
Revisions		

STATE OF CONNECTICUT DOTHA S. GIRARD NA 25780 LICENSED PROFESSIONAL ENGINEER

LANGAN
Langan Engineering and Environmental Services, Inc.
555 Long Wharf Drive
New Haven, CT 06511
T: 203.562.5771 F: 203.789.6142 www.langan.com

Project
RESTAURANT DEVELOPMENT AT EVERGREEN WALK
MAP No. 27, BLOCK No. 15, UNIT No. 2
601 EVERGREEN WAY
SOUTH WINDSOR
HARTFORD COUNTY CONNECTICUT

Drawing Title
UTILITY DETAILS I

Project No. 140222801
Date 08/25/2021
Drawn By CMD
Checked By DTG
Drawing No. CU501
Sheet 0 of 1

LANGAN
Project No. 140222801

© 2020 Langan

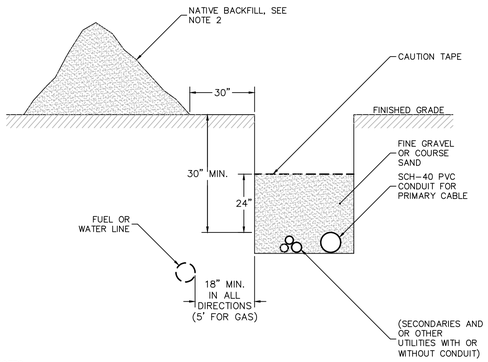

NOTES:
1. ALL DIRECT-BURIED CABLES SHALL BE INSTALLED AT A DEPTH OF AT LEAST 30 INCHES IN THE FOLLOWING ORDER:
   A. ENSURE THAT THE BOTTOM OF THE TRENCH IS WELL-TAMPED AND FREE OF ROCKS.
   B. INSTALL THE CONDUIT, GLUING ALL COUPLINGS.
   C. INSTALL SECONDARIES AND OTHER UTILITY CABLES OR CONDUITS LARGER THAN 2 INCHES IN MAXIMUM DIAMETER.
   D. BACKFILL WITH 12 INCHES CLEAN FILL NOT TO CONTAIN STONES LARGER THAN 2 INCHES IN MAXIMUM DIAMETER.
   E. INSTALL CABLE WARNING TAPE 12 INCHES OVER THE CONDUIT.
   F. FILL IN THE REMAINDER OF THE TRENCH WITH NATIVE BACKFILL.
2. THE TRENCH SHALL BE BACKFILLED IMMEDIATELY FOLLOWING PLACEMENT OF THE CONDUIT.
3. 1/4-INCH NYLON ROPE AND PLASTIC CONDUIT PLUG TO BE SUPPLIED AND INSTALLED BY CONTRACTOR.

1 ELECTRIC UTILITY TRENCH
N.T.S

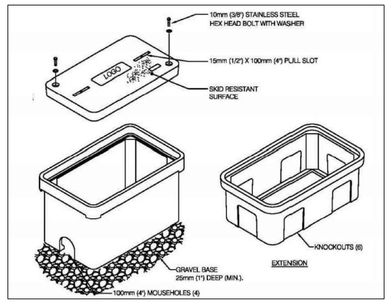

2 TELECOM HANDHOLE
N.T.S

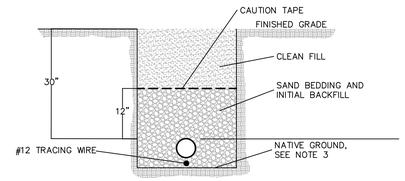

NOTES:

1. TRENCHES IN STABLE SOIL OVER 5 FT DEEP SHALL BE REINFORCED
2. BY APPROVED OSHA METHODS.
3. TRENCHES SHALL BE COMPACTED.
4. IF NATIVE GROUND IS NOT SUITABLE, THE CONTRACTOR SHALL EXCAVATE TO AN ACCEPTABLE DEPTH AND INSTALL MATERIALS AS APPROVED BY ENGINEERS AND UTILITY COMPANY. CONTRACTOR TO PROVIDE EXCAVATION, BEDDING, SAND BACKFILL AND FIND BACKFILL. GAS COMPANY TO PROVIDE INSTALLATION OF ALL GAS PIPING AND SERVICES.

3 GAS MAIN TRENCH DETAIL
N.T.S

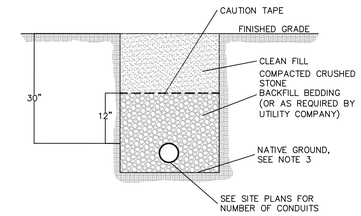

NOTES:

1. TRENCHES IN STABLE SOIL OVER 5 FT DEEP SHALL BE
2. REINFORCED BY APPROVED OSHA METHODS.
3. TRENCHES SHALL BE COMPACTED.
   IF NATIVE GROUND IS NOT SUITABLE, THE CONTRACTOR SHALL EXCAVATE TO AN ACCEPTABLE DEPTH AND INSTALL MATERIALS AS APPROVED BY ENGINEERS AND UTILITY COMPANY.

4 TELEPHONE TRENCH DETAIL
N.T.S

FOR PERMITTING ONLY - NOT FOR CONSTRUCTION

20 0 5 10 20
SCALE IN FEET

Date	Description	No.

Revisions

STATE OF CONNECTICUT
DOTHA S. OLIVEIRA
NA 25780
LICENSED
PROFESSIONAL ENGINEER

LANGAN
Langan Engineering and Environmental Services, Inc.
555 Long Wharf Drive
New Haven, CT 06511
T: 203.562.5771 F: 203.789.6142 www.langan.com

Project
RESTAURANT DEVELOPMENT AT EVERGREEN WALK
MAP No. 27, BLOCK No. 15, UNIT No. 2
601 EVERGREEN WAY
SOUTH WINDSOR
HARTFORD COUNTY CONNECTICUT

Drawing Title
UTILITY DETAILS II

Project No.	Drawing No.
140222801	CU502
Date: 08/25/2021	
Drawn By: IJAB	
Checked By: DTG	Sheet 0 of 1

LANGAN
Project No. 140222801

© 2020 Langan

WEST ACCESS DRIVE

EVERGREEN WAY

HEMLOCK AVENUE

80' WETLAND UPLAND REVIEW BUFFER (TYP.)

LIMIT OF DISTURBANCE (TYP.) ± 0.66 ACRES

CONSTRUCTION ENTRANCE GATE (TYP.)

TEMPORARY CONSTRUCTION FENCE (TYP.)

SILT FENCE (TYP.)

TEMPORARY STOCKPILE SURROUNDED BY HAYBALES (TYP.)

50' X 24' CONSTRUCTION ENTRANCE (TYP.)

INLET PROTECTION (TYP.)

APPROXIMATE LIMIT OF WETLANDS (TYP.)

PROPOSED RESTAURANT ± 3,200 SF

50' X 11' CONSTRUCTION ENTRANCE (TYP.)

PROPOSED RETAIL DEVELOPMENT SUBMITTED UNDER SEPARATE COVER

80' UPLAND REVIEW AREA BOUNDARY

DUMPSTER & ENCLOSURE W/GATE

GREASE TRAP

MASONRY BLOCK WALL (SHED)

APPROXIMATE LOCATION OF STONE TRENCH, PER C.O. 1

C.C.C.

FOR PERMITTING ONLY - NOT FOR CONSTRUCTION

20 0 5 10 20
SCALE IN FEET

Date	Description	No.

Revisions

STATE OF CONNECTICUT
DOUGLAS S. ONDAK
No. 25762
LICENSED
PROFESSIONAL ENGINEER

LANGAN

Langan Engineering and Environmental Services, Inc.

555 Long Wharf Drive
New Haven, CT 06511

T: 203.562.5771 F: 203.789.6142 www.langan.com

Project

RESTAURANT DEVELOPMENT AT EVERGREEN WALK

MAP No. 27, BLOCK No. 15, UNIT No. 2
601 EVERGREEN WAY
SOUTH WINDSOR
HARTFORD COUNTY CONNECTICUT

Drawing Title

SOIL EROSION & SEDIMENT CONTROL PLAN

Project No.	Drawing No.
140222801	CE101
Date: 08/25/2021	
Drawn By: IJAB	
Checked By: DTG	Sheet 0 of 1

LANGAN

Project No. 140222801

© 2020 Langan

Date: 8/25/2021 Time: 17:10 User: ibrown Style Table: Langan.stb Layout: CE101 Document Code: 140222801-0507-CE101-0101

SOIL EROSION-SEDIMENT CONTROL NOTES

PROPOSED DEVELOPMENT

1. CONSTRUCTION WILL INCLUDE EARTHWORK, CURBING, PAVING, UTILITY INSTALLATION, LANDSCAPING AND BUILDING CONSTRUCTION. ALL DEMOLITION DEBRIS AND SOIL REMOVAL RELATED TO CONSTRUCTION SHALL BE REMOVED AND DISPOSED OF IN ACCORDANCE WITH APPLICABLE STATE AND LOCAL LAWS GOVERNING SUCH ACTIVITIES.
2. THE DETAILED EROSION AND SEDIMENT CONTROL MEASURES ARE SHOWN ON DRAWING CE101. THE PROPOSED MEASURES HAVE BEEN DESIGNED TO PREVENT THE MIGRATION OF SOIL SEDIMENT FROM THE SITE.

SOIL EROSION AND SEDIMENT CONTROL NOTES

1. CONTRACTOR SHALL BE RESPONSIBLE FOR PHASING OF SOIL AND SEDIMENT CONTROL PRACTICES TO ENSURE SOIL AND SEDIMENT ARE PREVENTED FROM LEAVING THE DEVELOPMENT AREA THROUGHOUT DEMOLITION & CONSTRUCTION.
2. THE SOIL AND SEDIMENT CONTROL PRACTICES MUST BE INSTALLED IN ACCORDANCE WITH THE LOCAL GOVERNING AUTHORITY AND THE CONNECTICUT COUNCIL ON SOIL AND WATER CONSERVATION AND THE 2002 CONNECTICUT GUIDELINES FOR SOIL EROSION AND SEDIMENT CONTROL.
3. EROSION AND SEDIMENT CONTROL DEVICES MUST BE INSTALLED PRIOR TO START OF DEMOLITION AND CONSTRUCTION AND DISTURBANCE OF SITE CONTRIBUTORY DRAINAGE AREAS. THE OWNER OR ITS CONTRACTOR SHALL INSPECT, REPAIR AND REMOVE ALL SEDIMENT AND EROSION CONTROL DEVICES, AS INDICATED HEREIN. ALL EARTH CHANGES SHALL BE DESIGNED, CONSTRUCTED, AND COMPLETED IN SUCH A MANNER SO THAT THE EXPOSED AREA OF ANY DISTURBED LAND SHALL BE LIMITED TO THE SHORTEST POSSIBLE PERIOD OF TIME.
4. DISPOSAL OF COLLECTED SEDIMENT SHALL BE MADE TO AREA DESIGNATED BY THE OWNER'S SOIL ENGINEER.
5. FILTER FABRIC/SILT FENCE WILL BE INSTALLED ALONG THE TOE OF ALL CRITICAL CUT AND FILL SLOPES.
6. ALL TOPSOIL NOT TO BE USED FOR FINAL GRADING/LANDSCAPED AREAS SHALL BE REMOVED FROM THE SITE IMMEDIATELY, IN ACCORDANCE WITH APPLICABLE STATE AND LOCAL LAW. ALL TOPSOIL TO BE USED IN LANDSCAPED AREAS SHALL BE STORED/STOCKPILED IN ACCORDANCE WITH APPLICABLE STATE AND LOCAL LAW STANDARDS.
7. ALL AREAS WITHIN 500 FEET OF AN INHABITED DWELLING SHALL BE WETTED AS NECESSARY TO PROVIDE DUST CONTROL.
8. PAVEMENT BASE COURSE MUST BE PLACED IN ALL NEW ROADWAY AREAS UPON COMPLETION OF FINE GRADING.
9. THE CONTRACTOR IS RESPONSIBLE FOR ALL PAVED ROADWAYS, ON AND OFF-SITE, WHICH MUST BE KEPT FREE OF SITE GENERATED SEDIMENT AT ALL TIMES. DUST SHALL BE CONTROLLED BY SPRINKLING OR OTHER APPROVED METHOD.
10. ALL STORM DRAINAGE OUTLETS MUST BE STABILIZED, AS REQUIRED, BEFORE THE DISCHARGE POINTS BECOME OPERATIONAL.
11. SILT FENCES AND BARRIERS MUST BE CLEANED OR REPLACED PERIODICALLY TO REMOVE BUILT-UP SILT.
12. SEDIMENT TRAPS MUST BE CLEANED WHEN CAPACITY HAS BEEN REDUCED BY AN AVERAGE OF 2'-0" OVER ITS TOTAL AREA OR TO 70% OF ITS DESIGN VOLUMES, WHICHEVER OCCURS FIRST.
13. ALL EROSION AND SEDIMENT CONTROL DEVICES MUST BE INSPECTED ON A DAILY BASIS AND CLEANED IMMEDIATELY AFTER EACH STORM.
14. ANY TEMPORARY OR PERMANENT FACILITY DESIGNED FOR THE CONVEYANCE OF WATER AROUND, THROUGH, OR FROM THE EARTH CHANGE AREA SHALL BE DESIGNED TO LIMIT THE WATER FLOW TO A NON-EROSIVE VELOCITY.
15. THE CONTRACTOR SHALL CORRECT ANY OMISSIONS, ERRORS, OR FIELD OPERATIONS IMMEDIATELY AND IN ACCORDANCE WITH THE GUIDELINES FOR SOIL EROSION AND SEDIMENT CONTROL.
16. ANY CONVEYANCE OF THIS PROJECT PRIOR TO ITS COMPLETION WILL TRANSFER FULL RESPONSIBILITY FOR COMPLIANCE WITH THE CERTIFIED PLAN TO ANY SUBSEQUENT OWNERS.
17. SOIL EROSION AND SEDIMENT CONTROLS MUST BE INSPECTED BY THE ZONING ENFORCEMENT OFFICER BEFORE WORK MAY COMMENCE.
18. THE PROPERTY OWNER AND/OR HIS/HER AGENTS MUST MAINTAIN (REPAIR/REPLACE), WHEN NECESSARY, THE SILTATION CONTROL UNTIL ALL DEVELOPMENT ACTIVITY IS COMPLETED AND ALL DISTURBED AREAS ARE PERMANENTLY STABILIZED.

TEMPORARY STABILIZATION

SEDIMENT DISPOSAL AREAS AND TOPSOIL STOCKPILES NOT SCHEDULED FOR CONSTRUCTION ACTIVITIES WITHIN THIRTY (30) DAYS OF DISTURBANCE SHALL BE STABILIZED AS FOLLOWS:

A. SOIL AMENDMENTS AS NECESSARY.
B. ANNUAL RYE GRASS SEEDING APPLIED AT A RATE OF NOT LESS THAN 1 LB. PER 1,000 SF.
C. MULCH ALL NEWLY SEEDED AREAS WITHIN 80 LBS. OF SALT HAY OR SMALL GRAIN STRAW PER 1,000 SF.
D. WHEN DISTURBED AREAS ARE SCHEDULED FOR IMMEDIATE LANDSCAPING THEY MAY BE MULCHED AND SEEDED PER ITEM C ABOVE.

PERMANENT STABILIZATION

REFER TO PLANS FOR PERMANENT STABILIZATION METHODS + PROPOSED SEED MIXES.

A. PERMANENT VEGETATION IS TO BE SEEDED OR SODDED ON ALL DISTURBED LAND AREAS WITHIN SEVEN (7) DAYS AFTER FINAL GRADING. MULCH AS NECESSARY FOR SEED PROTECTION AND ESTABLISHMENT. AMEND SOIL AS NEEDED PRIOR TO PERMANENT SEEDING. WHEN IT IS NOT POSSIBLE TO PERMANENTLY STABILIZE A DISTURBED AREA AFTER COMPLETION OF AN EARTH CHANGE OR WHEN SIGNIFICANT EARTH CHANGE ACTIVITY CEASES, TEMPORARY SOIL EROSION CONTROL MEASURES SHALL BE IMPLEMENTED. ALL TEMPORARY SOIL EROSION CONTROL MEASURES SHALL BE MAINTAINED UNTIL PERMANENT SOIL EROSION CONTROL MEASURES SHALL BE IMPLEMENTED. ALL DISTURBED AREAS, STOCKPILES OF FILL OR EXCAVATED MATERIAL SHALL BE STABILIZED IN SUCH A MANNER AS NOT TO CAUSE UNREASONABLE HAZARD TO PERSONS OR PROPERTY.
B. MATERIALS SPECIFICATION: LAWN + MEADOW AREAS
   (I) ANY SOIL HAVING A pH OF FOUR OR LESS CONTAINING IRON SULFIDES SHALL BE COVERED WITH A MINIMUM OF TWELVE INCHES OF SOIL HAVING A pH OF FIVE OR MORE PRIOR TO SEED BED PREPARATION.
C. MULCHING SHALL BE DONE AT THE RATE OF SEVENTY TO NINETY POUNDS (70-90 LBS) PER 1,000 SQUARE FEET WITH UNROTTED SALT HAY.
D. LIQUID MULCH BINDERS MUST BE USED TO ANCHOR SALT HAY, HAY OR STRAY MULCHES.
   (I) APPLICATIONS SHOULD BE HEAVIER AT EDGES WHERE WIND CATCHES THE MULCH IN VALLEYS AND AT CREATED BANKS. REMAINDER OF AREA SHOULD BE UNIFORM IN APPEARANCE.
   (ii) USE ONE OF THE FOLLOWING: SYNTHETIC OR ORGANIC BINDERS, BINDERS SUCH AS CURASOL DCA-70, PETRO SET, TERRA TACH, HYDRO MULCH AND AEROSPRAY MAY BE USED AT RATES RECOMMENDED BY THE MANUFACTURER OF ANCHOR MULCH MATERIALS. BINDERS CONTAINING PETROLEUM PRODUCTS SHALL NOT BE USED.

NOTE: ALL NAMES GIVEN ABOVE ARE REGISTERED TRADE NAMES. THIS DOES NOT CONSTITUTE A RECOMMENDATION OF THESE TO THE EXCLUSION OF OTHER PRODUCTS.

D. FILL MATERIAL SHALL BE FREE FROM DEBRIS, PERISHABLE OR COMBUSTIBLE MATERIAL AND FROZEN OR WET EARTH OR STONES LARGER THAN THREE INCHES IN MAXIMUM DIMENSION.
E. CONSTRUCTION AREAS SHALL BE PERIODICALLY SPRAYED WITH WATER UNTIL THE SURFACE IS WET TO CONTROL THE GENERATION OF DUST.
F. ALL REVISIONS AFTER APPROVAL HAS BEEN GRANTED SHALL BE FORWARDED TO THE APPROPRIATE DISTRICT FOR REVIEW.
G. THE LOCAL GOVERNING AUTHORITY SHALL RECEIVE WRITTEN NOTIFICATION SEVENTY TWO HOURS BEFORE THE START OF ANY CONSTRUCTION.
H. SEEDBED PREPARATION:
   (I) TOPSOIL SHOULD BE A MINIMUM OF SIX INCHES DEEP (LIGHTLY COMPACTED) BEFORE SEEDING.
   (ii) TOPSOIL SHALL BE TESTED PRIOR TO SEEDING.
   (iii) WORK SOIL AMENDMENTS INTO SOIL AS NECESSARY AS NEARLY AS PRACTICAL TO A DEPTH OF FOUR INCHES WITH A DISC, SPRINGTOOTH HARROW OR OTHER SUITABLE EQUIPMENT. THE FINAL HARROWING OR DISCING OPERATION SHOULD BE ON THE GENERAL CONTOUR. CONTINUE ALL CLAY OR SILTY SOIL AND COARSE SANDS SHOULD BE ROLLED TO FIRM THE SEED BED WHEREVER FEASIBLE.
   (iv) REMOVE FROM THE SURFACE ALL STONES ONE INCH OR LARGER IN ANY DIMENSION. REMOVE ALL OTHER DEBRIS, SUCH AS WIRE, CABLE, TREE ROOTS, PIECES OF CONCRETE, CLODS, LUMPS, OR OTHER UNSUITABLE MATERIAL.
   (v) INSPECT SEED BED JUST BEFORE SEEDING. IF TRAFFIC HAS LEFT SOIL COMPACT, THE AREA MUST BE RETILLED AND FIRMED AS ABOVE.

CONTINGENCY SOIL EROSION AND SEDIMENT CONTROL NARRATIVE

19. THE GENERAL CONTRACTOR WILL DESIGNATE PERSONNEL FOR 24 HOUR EMERGENCY RESPONSE IN THE EVENT OF SEVERE WEATHER AND INCREASED POTENTIAL FOR SEVERE EROSION.
20. THE GENERAL CONTRACTOR IS REQUIRED TO MAINTAIN ON SITE OR HAVE THE ABILITY TO RETRIEVE WITHIN 12 HOURS THE FOLLOWING MATERIALS IN THE EVENT THAT THERE ARE DEFICIENCIES IN THE SESC MEASURES:
    A. 25% OF THE INSTALLED LENGTH OF SILT FENCE
    B. EQUIVALENT TONNAGE OF STONE FOR STABILIZATION OF 2 STABILIZATION ENTRANCES. STONE COULD BE USED FOR SLOPE REPAIRS, ENERGY DISSIPATER ENHANCEMENTS, ETC.
    C. HEAVY EQUIPMENT CAPABLE OF TRENCHING/EXCAVATING LARGE AREAS TO DIVERT AND CONTROL RUNOFF IN A CONTROLLED MANNER.
    D. HAVE DESIGNATED A HYDRO-SEED CONTRACTOR CAPABLE OF RESPONDING TO THE SITE WITHIN 12 HOURS
21. ANY STUMP GRINDINGS OR WOOD CHIPS GENERATED ON-SITE SHOULD BE RETAINED FOR USE TO BACK UP SILT FENCES.

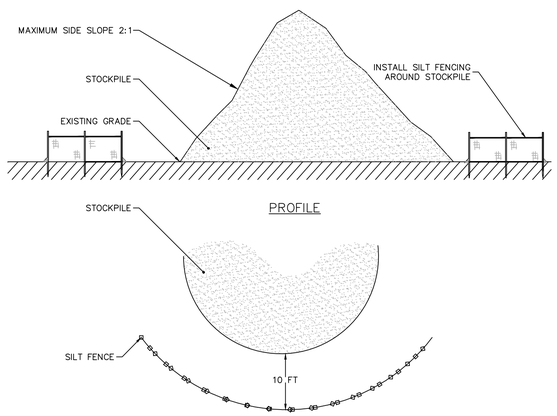

NOTES:
1. SEE SOIL EROSION & SEDIMENT CONTROL PLAN FOR LOCATION OF SILT FENCE BARRIER.
2. SIDE SLOPES SHALL BE SEEDED OR STABILIZED WITH EROSION CONTROL MATS IF NOT DISTURBED FOR THIRTY DAYS.

1 TEMPORARY STOCKPILE
N.T.S

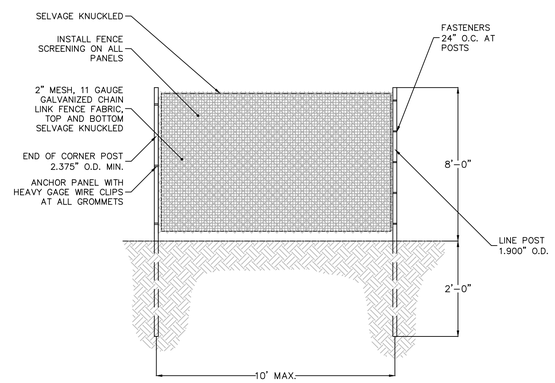

NOTES:
1. PIPE POSTS SHALL BE IMBEDDED INTO THE GROUND. PEDESTAL MOUNTED FENCING WILL ONLY BE ALLOWED AT AREAS APPROVED BY THE PROJECT MANAGER. WHEN ALLOWED, PROVIDE CONCRETE OR GALVANIZED-STEEL BASES FOR SUPPORTING POSTS. PROVIDE BLUE REINFORCED SCRIM SHEETING ON ALL FENCING.

2 TEMPORARY CONSTRUCTION FENCE
N.T.S

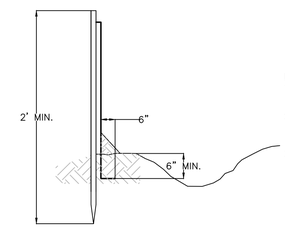

INSTALLATION NOTES:
1. EXCAVATE AND SECURE BOTTOM 6" OF SILT FENCE BELOW GRADE AS SHOWN.
2. EXCEPT FOR THE END POST, DRIVE ALL POSTS INTO THE GROUND AT BACK SIDE OF TRENCH SPACED A MAXIMUM OF 8 FT O. C.
3. SECURE FILTER FABRIC WITH DRAWSTRING TO POST WITH METAL FASTENERS AND REINFORCEMENT BETWEEN FASTENER AND FABRIC.

3 SILT FENCE
N.T.S

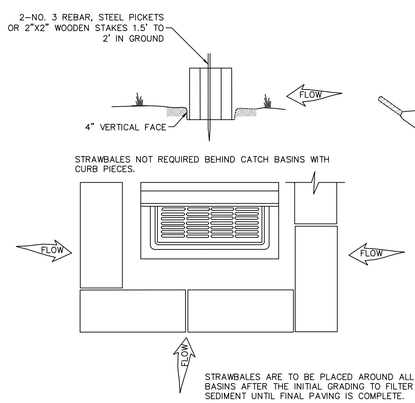

STRAWBALES ARE TO BE PLACED AROUND ALL CATCH BASINS AFTER THE INITIAL GRADING TO FILTER AND DIVERT SEDIMENT UNTIL FINAL PAVING IS COMPLETE.

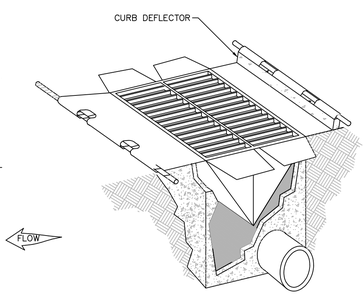

TYPE B – CURB INLET

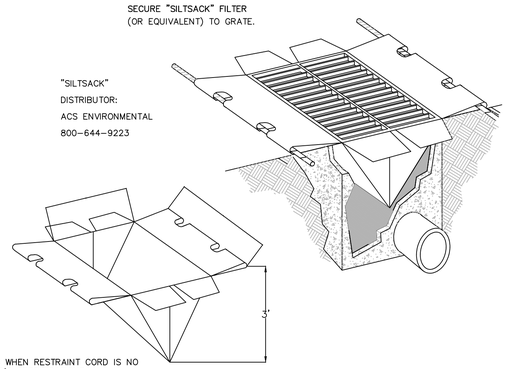

NOTES:
1. CONTRACTOR IS TO CLEAN INLET FILTER WHEN RESTRAINT CORD IS NO LONGER VISIBLE AS PER MANUFACTURER'S SPECIFICATIONS.
2. CONTRACTOR TO REMOVE FILTER JUST PRIOR TO PAVING.

4 INLET PROTECTION
N.T.S

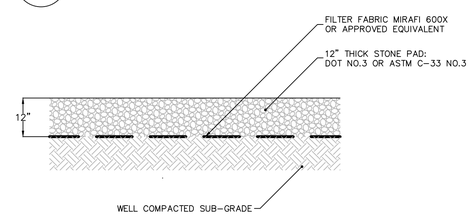

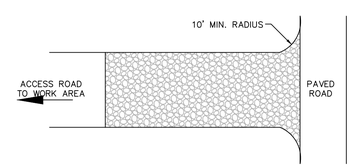

NOTE:
1. CONSTRUCTION PAD LOCATION TO BE SET BY CONTRACTOR AND LOCATED AS REQUIRED FOR CONSTRUCTION SEQUENCING.
2. SEE SOIL EROSION & SEDIMENT CONTROL PLAN, CE101, FOR DIMENSIONS.

5 CONSTRUCTION ENTRANCE
N.T.S

FOR PERMITTING ONLY - NOT FOR CONSTRUCTION

Date	Description	No.
Revisions		

LANGAN
Langan Engineering and Environmental Services, Inc.
555 Long Wharf Drive
New Haven, CT 06511
T: 203.562.5771 F: 203.789.6142 www.langan.com

Project
RESTAURANT DEVELOPMENT AT EVERGREEN WALK
MAP No. 27, BLOCK No. 15, UNIT No. 2
601 EVERGREEN WAY
SOUTH WINDSOR
HARTFORD COUNTY CONNECTICUT

Drawing Title
SOIL EROSION & SEDIMENT CONTROL DETAILS

Project No.	Drawing No.
140222801	CE501
Date: 08/25/2021	
Drawn By: IJAB	
Checked By: DTG	Sheet 0 of 1

LANGAN
Project No. 140222801

© 2020 Langan

STREAM AND BUFFER ENHANCEMENT AREA PLANT SCHEDULE

QTY.	BOTANICAL NAME	COMMON NAME	SIZE	SPACING	REMARKS
SHADE TREE(S)					
10	CORNUS AMOMUM	SILKY DOGWOOD	3–4'	5–10 FEET	–
10	CORNUS RACEMOSA	GRAY DOGWOOD	3–4'	5–10 FEET	–
10	POPULUS DELTOIDES	EASTERN COTTONWOOD	3–4'	20 FEET	–
10	SALIX DISCOLOR	PUSSY WILLOW	3–4'	5–10 FEET	–
10	VIBURNUM LENTAGO	NANNYBERRY	3–4'	5–10 FEET	–
10	ARONIA MELANOCARPA	BLACK CHOKEBERRY	3–4'	5–10 FEET	–

NOTES:

1. PLANTING STOCK USED IN THE WETLAND MITIGATION AREA SHALL BE INSPECTED FOR PESTS, DISEASE AND OVERALL HEALTH TO ENSURE SUITABLE SPECIMENS ARE USED. UNSUITABLE SPECIMENS WILL BE REJECTED AND REPLACED WITH SUITABLE SPECIMENS. ANY PLANTING SUBSTITUTIONS MUST BE APPROVED BY THE PROJECT WETLAND SCIENTIST. ALL WOODY PLANT STOCK SHALL BE CONTAINER–GROWN OR BURLAP BALLED. DEVIATIONS TO THE PLANTING PLAN MUST BE APPROVED BY THE PROJECT WETLAND SCIENTIST. ONLY PLANT MATERIALS NATIVE AND INDIGENOUS TO CONNECTICUT SHALL BE USED. INVASIVE PLANT SPECIES WILL NOT BE USED IN THE MITIGATION AREA.
2. ALL PLANTINGS TO BE SPACED GENERALLY AS NOTED ON THE PLANTING SCHEDULE WITH ASSISTANCE FROM A WETLAND SCIENTIST, AS NECESSARY, TO SIMULATE NATURAL GROWTH PATTERNS.

STREAM AND BUFFER ENHANCEMENT AREA PLANT SCHEDULE AS PREPARED BY ALL-POINTS TECHNOLOGY CORPORATION

PLANT SCHEDULE

KEY	QTY.	BOTANICAL NAME	COMMON NAME	SIZE	ROOT	REMARKS
SHADE TREE(S)						
AROG	3	ACER RUBRUM 'OCTOBER GLORY'	OCTOBER GLORY RED MAPLE	2 1/2–3" CAL.	B+B	–
PLO	3	PLATANUS OCCIDENTALIS	AMERICAN SYCAMORE	2 1/2–3" CAL.	B+B	–
ORNAMENTAL TREE(S)						
BND	6	BETULA NIGRA 'DURA HEAT'	DURA HEAT RIVER BIRCH	10–12'	B+B	MULTI–STEM
DECIDUOUS SHRUB(S)						
AMLM	17	ARONIA MELANOCARPA 'LO MOUND'	LO MOUND BLACK CHOKEBERRY	2 GAL.	CONTAINER	–
CA	22	CLETHRA ALNIFOLIA	SUMMERSWEET CLETHRA	24–30"	CONTAINER	–
ORNAMENTAL GRASS(ES)						
CAKF	92	CALAMAGROSTIS ARUNDINACEA 'KARL FOERSTER'	FEATHER REED GRASS	2 GAL.	CONTAINER	–
PVHM	135	PANICUM VIRGATUM 'HEAVY METAL'	HEAVY METAL SWITCH GRASS	2 GAL.	CONTAINER	spaced @ 30" o.c.
SPO	217	SPOROBOLUS HETEROLEPIS	PRARIE DROPSEED	2 GAL.	CONTAINER	spaced @ 24" o.c.
SSCO	340	SCHIZACHYRIUM SCOPARIUM	LITTLE BLUESTEM	2 GAL.	CONTAINER	spaced @ 24" o.c.

NOTE: IF ANY DISCREPANCIES OCCUR BETWEEN AMOUNTS SHOWN IN THE PLAN AND THE PLANT LIST, THE PLAN SHALL DICTATE.

ORDINANCE COMPLIANCE CHART

SECTION	REQUIRED/ PERMITTED	PROVIDED/ PROPOSED	COMPLIANCE
6.2.1	LARGE TREES AND STANDS OF MATURE TREES AND SHRUBS ARE TO REMAIN UNDISTURBED WHERE PRACTICAL AND DESIRABLE.	LARGE EXISTING TREES, TREE STANDS, AND SHRUBS ARE PRESERVED TO EXTENT PRACTICABLE.	COMPLIES
6.2.3	LANDSCAPING SHALL NOT OBSTRUCT LINE–OF–SIGHT FOR VEHICLES ENTERING AND LEAVING EITHER COMMON DRIVEWAYS OR OTHER ACCESS WAYS.	ALL PROPOSED PLANTINGS WITHIN SITE DISTANCE TRIANGLES WILL NO EXCEED 3' HEIGHT AT MATURITY, DECIDUOUS TREES ARE TO BE LIMBED TO 6 FOOT HEIGHT.	COMPLIES
6.4.6.(D.)	DECIDUOUS SHADE TREES SHALL BE A MINIMUM OF 2" CALIPER AND 10 FEET AT PLANTING; FLOWERING TREES SHALL BE A MINIMUM OF 6 FEET IN HEIGHT AT THE TIME OF PLANTING AND 1 $\frac{1}{2}$" CALIPER.	ALL PROPOSED PARKING LOT TREES TO BE A MINIMUM 2" CALIPER AND 10 FEET HIGH AT TIME OF PLANTING. ALL PROPOSED FLOWERING TREES TO BE A MINIMUM 1 $\frac{1}{2}$ " CALIPER AND 6 FEET HIGH AT TIME OF PLANTING.	COMPLIES
6.4.6A	PERIMETER SCREENING IS TO CONTAIN 1 TREE OR 2 SHRUBS FOR EVERY 3 PERIMETER PARKING SPACES.	PERIMETER LANDSCAPE PLANTING CONTAINS AT LEAST 1 TREE OR 2 SHRUBS PER EVERY 3 PERIMETER PARKING SPACES. TOTAL PROPOSED PERIMETER PARKING SPACES = 16 / 3 = 5.33 = 6, A/O 5.33 * 2 = 10.66 = 11 –6 TREES REQUIRED OR 11 SHRUBS REQUIRED –6 TREES PROPOSED	COMPLIES
6.4.6A	PARKING AREAS WITH MORE THAN 30 SPACES ARE TO HAVE AT LEAST 10% OF THEIR INTERIOR PARKING AREA LANDSCAPED, 1 TREE PER EVERY 10 SPACES IS REQUIRED.	PARKING LOT IS LANDSCAPED WITH ONE TREE PER EVERY 10 SPACES TOTAL PROPOSED PARKING SPACES = 30 30 / 10 = 3 = 3 –3 TREES REQUIRED –3 TREES PROPOSED	COMPLIES

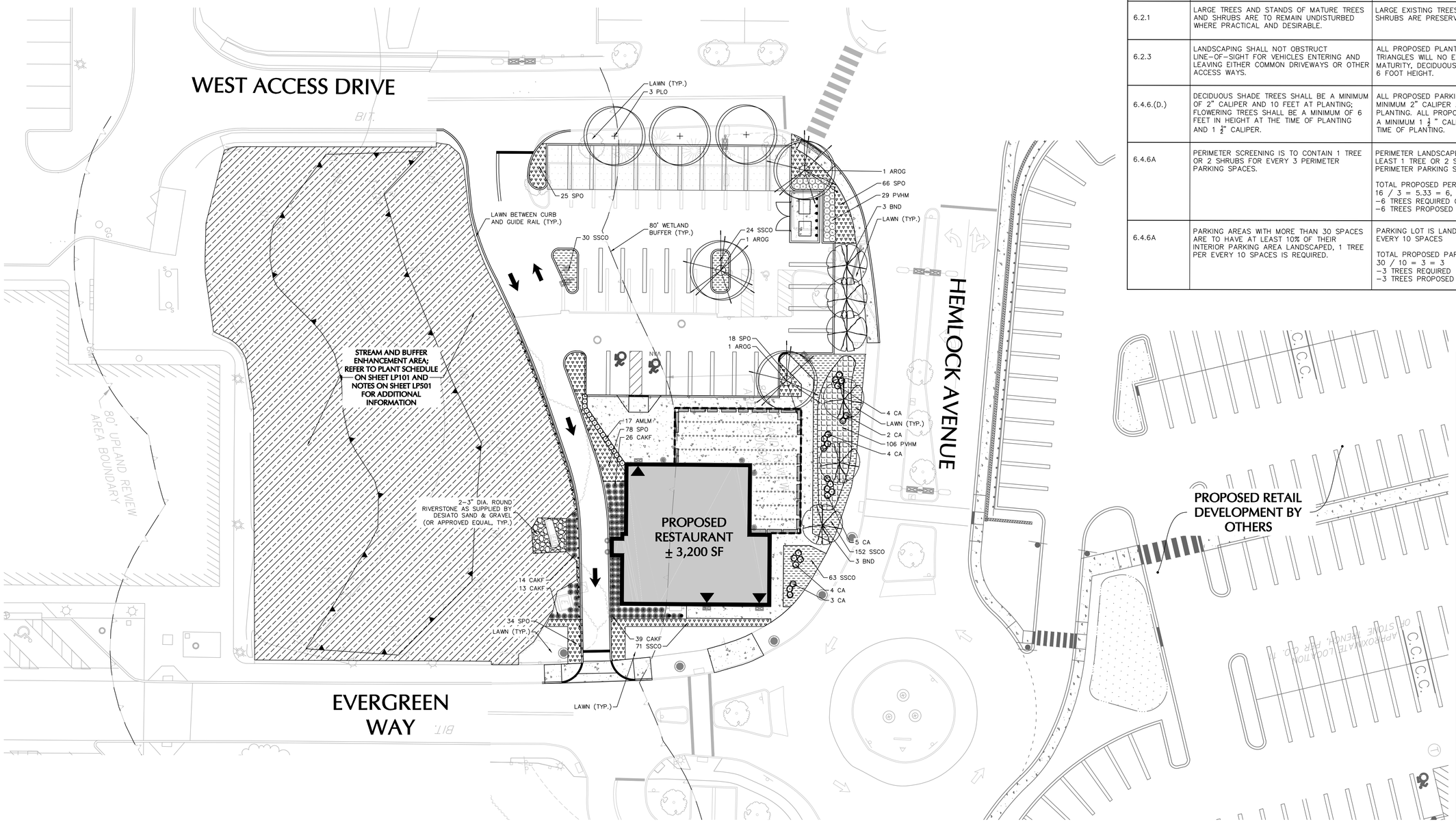

FOR PERMITTING ONLY - NOT FOR CONSTRUCTION

20 0 5 10 20
SCALE IN FEET

Date	Description	No.
Revisions		

STATE OF CONNECTICUT MICHAEL SZURA

MICHAEL SZURA
LICENSED LANDSCAPE ARCHITECT
STATE LIC. No. 1339

LANGAN
Langan Engineering and Environmental Services, Inc.
555 Long Wharf Drive
New Haven, CT 06511
T: 203.562.5771 F: 203.789.6142 www.langan.com

Project
RESTAURANT DEVELOPMENT AT EVERGREEN WALK
MAP No. 27, BLOCK No. 15, UNIT No. 2
601 EVERGREEN WAY
SOUTH WINDSOR
HARTFORD COUNTY CONNECTICUT

Drawing Title
LANDSCAPE PLANTING PLAN

Project No. 140222801
Date 08/25/2021
Drawn By AC
Checked By JA
Drawing No. LP101
Sheet 0 of 1

LANGAN
Project No. 140222801

© 2020 Langan

GENERAL LANDSCAPE PLANTING NOTES

1. NAMES OF PLANTS AS DESCRIBED ON THIS PLAN CONFORM TO THOSE GIVEN IN "STANDARDIZED PLANT NAMES", 1942 EDITION, PREPARED BY THE AMERICAN JOINT COMMITTEE ON HORTICULTURAL NOMENCLATURE. NAMES OF PLANT VARIETIES NOT INCLUDED THEREIN CONFORM TO NAMES GENERALLY ACCEPTED IN NURSERY TRADE.
2. ALL EXPOSED GROUND SURFACES THAT ARE NOT PAVED WITHIN THE CONTRACT LIMIT LINE, AND THAT ARE NOT COVERED BY LANDSCAPE PLANTING OR SEEDING AS SPECIFIED, SHALL BE COVERED BY A NATURAL MULCH THAT WILL PREVENT SOIL EROSION AND THE EMANATION OF DUST.
3. NO PLANT SHALL BE PUT INTO THE GROUND BEFORE ROUGH GRADING HAS BEEN COMPLETED AND APPROVED BY THE PROJECT LANDSCAPE ARCHITECT OR PROJECT ENGINEER.
4. STANDARDS FOR TYPE, SPREAD, HEIGHT, ROOT BALL AND QUALITY OF NEW PLANT MATERIAL SHALL BE IN ACCORDANCE WITH GUIDELINES AS SET FORTH IN THE "AMERICAN STANDARD FOR NURSERY STOCK", PUBLISHED BY THE AMERICAN ASSOCIATION OF NURSERYMEN. PLANT MATERIAL SHALL HAVE NORMAL HABIT OF GROWTH AND BE HEALTHY, VIGOROUS, AND FREE FROM DISEASES AND INSECT INFESTATION.
5. NEW PLANT MATERIAL SHALL BE NURSERY GROWN UNLESS SPECIFIED OTHERWISE. ALL PLANTS SHALL BE SET PLUMB AND SHALL BEAR THE SAME RELATIONSHIP TO FINISHED GRADE AS THE PLANT'S ORIGINAL GRADE BEFORE DIGGING. PLANT MATERIAL OF THE SAME SPECIES AND SPECIFIED AS THE SAME SIZE SHOULD BE SIMILAR IN SHAPE, COLOR AND HABIT. THE LANDSCAPE ARCHITECT HAS THE RIGHT TO REJECT PLANT MATERIAL THAT DOES NOT CONFORM TO THE TYPICAL OR SPECIFIED HABIT OF THAT SPECIES.
6. THE CONTRACTOR SHALL VERIFY THE LOCATION OF ALL EXISTING UNDERGROUND UTILITY AND SEWER LINES PRIOR TO THE START OF EXCAVATION ACTIVITIES. NOTIFY THE PROJECT ENGINEER AND OWNER IMMEDIATELY OF ANY CONFLICTS WITH PROPOSED PLANTING LOCATIONS. THE CONTRACTOR SHALL BE RESPONSIBLE FOR ANY DAMAGE.
7. THE CONTRACTOR SHALL NOT MAKE SUBSTITUTIONS. IF THE SPECIFIED LANDSCAPE MATERIAL IS NOT OBTAINABLE, THE CONTRACTOR SHALL SUBMIT PROOF OF NON-AVAILABILITY TO THE LANDSCAPE ARCHITECT AND OWNER, TOGETHER WITH A WRITTEN PROPOSAL FOR USE OF AN EQUIVALENT MATERIAL.
8. LANDSCAPE CONTRACTOR TO STAKE OUT PLANTING LOCATIONS, FOR REVIEW AND APPROVAL BY THE LANDSCAPE ARCHITECT AND/OR OWNER BEFORE PLANTING WORK BEGINS. THE LANDSCAPE ARCHITECT AND/OR OWNER SHALL DIRECT THE CONTRACTOR IN THE FINAL PLACEMENT OF ALL PLANT MATERIAL AND LOCATION OF PLANTING BEDS TO ENSURE COMPLIANCE WITH DESIGN INTENT UNLESS OTHERWISE INSTRUCTED.
9. THE LANDSCAPE ARCHITECT MAY REVIEW PLANT MATERIALS AT THE SITE, BEFORE PLANTING, FOR COMPLIANCE WITH REQUIREMENTS FOR GENUS, SPECIES, VARIETY, SIZE, AND QUALITY. THE LANDSCAPE ARCHITECT RETAINS THE RIGHT TO FURTHER REVIEW PLANT MATERIALS FOR SIZE AND CONDITION OF BALLS AND ROOT SYSTEM, INSECTS, INJURIES, AND LATENT DEFECTS, AND TO REJECT UNSATISFACTORY OR DEFECTIVE MATERIAL AT ANY TIME DURING PROGRESS OF WORK. THE CONTRACTOR SHALL REMOVE REJECTED PLANT MATERIALS IMMEDIATELY FROM PROJECT SITE AS DIRECTED BY THE LANDSCAPE ARCHITECT OR OWNER.
10. DELIVERY, STORAGE, AND HANDLING
    A. PACKAGED MATERIALS: PACKAGED MATERIALS SHALL BE DELIVERED IN CONTAINERS SHOWING WEIGHT, ANALYSIS, AND NAME OF MANUFACTURER. MATERIALS SHALL BE PROTECTED FROM DETERIORATION DURING DELIVERY, AND WHILE STORED AT SITE.
    B. TREES AND SHRUBS: THE CONTRACTOR SHALL PROVIDE TREES AND SHRUBS DUG FOR THE GROWING SEASON FOR WHICH THEY WILL BE PLANTED. DO NOT PRUNE PRIOR TO DELIVERY UNLESS OTHERWISE DIRECTED BY THE LANDSCAPE ARCHITECT. DO NOT BEND OR BIND-TIE TREES OR SHRUBS IN SUCH A MANNER AS TO DAMAGE BARK, BREAK BRANCHES, OR DESTROY NATURAL SHAPE. PROVIDE PROTECTIVE COVERING DURING TRANSIT. DO NOT DROP BALLED AND BURLAPPED STOCK DURING DELIVERY OR HANDLING.
    C. ALL PLANTS SHALL BE BALLED AND BURLAPPED OR CONTAINER GROWN AS SPECIFIED. NO CONTAINER GROWN STOCK WILL BE ACCEPTED IF IT IS ROOT BOUND. ALL ROOTBALL WRAPPING AND BINDING MATERIAL MADE OF SYNTHETICS OR PLASTICS SHALL BE REMOVED FROM THE TOP OF THE BALL AT THE TIME OF PLANTING. IF THE PLANT IS SHIPPED WITH A WIRE BASKET AROUND THE ROOT BALL, THE WIRE BASKET SHALL BE CUT AND FOLDED DOWN 8 INCHES INTO THE PLANTING HOLE. WITH CONTAINER GROWN STOCK, THE CONTAINER SHALL BE REMOVED AND THE ROOT BALL SHALL BE CUT THROUGH THE SURFACE IN TWO LOCATIONS.
    D. THE CONTRACTOR SHALL HAVE TREES AND SHRUBS DELIVERED TO SITE AFTER PREPARATIONS FOR PLANTING HAVE BEEN COMPLETED AND PLANT IMMEDIATELY. IF PLANTING IS DELAYED MORE THAN 6 HOURS AFTER DELIVERY, THE CONTRACTOR SHALL SET TREES AND SHRUBS IN SHADE, PROTECT FROM WEATHER AND MECHANICAL DAMAGE AND KEEP ROOTS MOIST BY COVERING WITH MULCH, BURLAP OR OTHER ACCEPTABLE MEANS OF RETAINING MOISTURE.
11. ALL LANDSCAPED AREAS TO BE CLEARED OF ROCKS, STUMPS, TRASH AND OTHER UNSIGHTLY DEBRIS. ALL FINE GRADED AREAS SHOULD BE HAND RAKED SMOOTH ELIMINATING ANY CLUMPS AND AND UNEVEN SURFACES PRIOR TO PLANTING OR MULCHING.
12. ALL PLANT MATERIAL SHALL BE INSTALLED AS PER DETAILS, NOTES AND CONTRACT SPECIFICATIONS. THE LANDSCAPE ARCHITECT MAY REVIEW INSTALLATION AND MAINTENANCE PROCEDURES.
13. NEW PLANT MATERIAL SHALL BE GUARANTEED TO BE ALIVE AND IN VIGOROUS GROWING CONDITION FOR A PERIOD OF ONE YEAR FOLLOWING ACCEPTANCE BY THE OWNER. PLANT MATERIAL FOUND TO BE UNHEALTHY, DYING OR DEAD DURING THIS PERIOD, SHALL BE REMOVED AND REPLACED IN KIND BY THE CONTRACTOR AT NO EXPENSE TO THE OWNER.
14. THE CONTRACTOR SHALL KEEP AREA CLEAN DURING DELIVERY AND INSTALLATION OF PLANT MATERIALS. REMOVE AND DISPOSE OF OFF-SITE ANY ACCUMULATED DEBRIS OR UNUSED MATERIALS. REPAIR DAMAGE TO ADJACENT AREAS CAUSED BY LANDSCAPE INSTALLATION OPERATIONS.
15. ALL PLANTS SHALL BE WATERED THOROUGHLY TWICE DURING THE FIRST 24-HOUR PERIOD AFTER PLANTING. ALL PLANTS SHALL THEN BE WATERED WEEKLY OR AS REQUIRED BY SITE AND WEATHER CONDITIONS TO MAINTAIN VIGOROUS AND HEALTHY PLANT GROWTH.
16. THE BACKFILL MIXTURE AND SOIL MIXES TO BE INSTALLED PER THE SPECIFICATIONS.
17. AFTER PLANT IS PLACED IN TREE PIT LOCATION, ALL TWINE HOLDING ROOT BALL TOGETHER SHOULD BE COMPLETELY REMOVED AND THE BURLAP SHOULD BE PULLED DOWN SO 1/3 OF THE ROOT BALL IS EXPOSED. SYNTHETIC BURLAP SHOULD BE COMPLETELY REMOVED AFTER INSTALLATION.
18. MULCH SHOULD NOT BE PILED UP AROUND THE TRUNK OF ANY PLANT MATERIAL. NO MULCH OR TOPSOIL SHOULD BE TOUCHING THE BASE OF THE TRUNK ABOVE THE ROOT COLLAR.
19. ALL FENCE INSTALLATION SHALL BE COMPLETED PRIOR TO COMMENCEMENT OF ANY LANDSCAPE PLANTING, LAWN AND GRASSES, OR IRRIGATION WORK.
20. FOR ANY DISCREPANCIES BETWEEN THE PLANT SCHEDULE AND PLANTING PLAN THE GRAPHIC QUANTITY SHOWN SHALL GOVERN.
21. PLANT MATERIALS SHALL NOT BE PLANTED UNTIL THE FINISHED GRADING HAS BEEN COMPLETED.
22. ALL PLANT INSTALLATIONS SHALL BE COMPLETED EITHER BETWEEN APRIL 1 – JUNE 15 OR AUGUST 15 – NOVEMBER 1, UNLESS OTHERWISE DIRECTED BY THE PROJECT LANDSCAPE ARCHITECT. SEE LAWN SEEDING DATES IN SEEDING NOTES.

LANDSCAPE MAINTENANCE NOTES

1. MAINTENANCE OPERATIONS BEFORE APPROVAL:
   A. PLANT CARE SHALL BEGIN IMMEDIATELY AFTER EACH PLANT IS SATISFACTORILY INSTALLED AND SHALL CONTINUE THROUGHOUT THE LIFE OF THE CONTRACT UNTIL FINAL ACCEPTANCE OF THE PROJECT.
   B. CARE SHALL INCLUDE, BUT NOT BE LIMITED TO, REPLACING MULCH THAT HAS BEEN DISPLACED BY EROSION OR OTHER MEANS, REPAIRING AND RESHAPING WATER RINGS OR SAUCERS, MAINTAINING STAKES AND GUYS AS ORIGINALLY INSTALLED, WATERING WHEN NEEDED OR DIRECTED, AND PERFORMING ANY OTHER WORK REQUIRED TO KEEP THE PLANTS IN A HEALTHY CONDITION.
   C. CONTRACTOR SHALL REMOVE AND REPLACE ALL DEAD, DEFECTIVE AND/OR REJECTED PLANTS AS REQUIRED BEFORE FINAL ACCEPTANCE.
2. MAINTENANCE DURING CONSTRUCTION:
   A. MAINTENANCE SHALL BEGIN IMMEDIATELY AFTER PLANTING. PLANTS SHALL BE WATERED, MULCHED, WEEDED, PRUNED, SPRAYED, FERTILIZED, CULTIVATED, AND OTHERWISE MAINTAINED AND PROTECTED UNTIL PROVISIONAL ACCEPTANCE. SETTLED PLANTS SHALL BE RESET TO PROPER GRADE AND POSITION, PLANTING SAUCER RESTORED AND DEAD MATERIAL REMOVED. STAKES AND WIRES SHALL BE TIGHTENED AND REPAIRED. DEFECTIVE WORK SHALL BE CORRECTED AS SOON AS POSSIBLE AFTER IT BECOMES APPARENT AND WEATHER AND SEASON PERMIT.
   B. IF A SUBSTANTIAL NUMBER OF PLANTS ARE SICKLY OR DEAD AT THE TIME OF INSPECTION, ACCEPTANCE SHALL NOT BE GRANTED AND THE CONTRACTOR'S RESPONSIBILITY FOR MAINTENANCE OF ALL PLANTS SHALL BE EXTENDED FROM THE TIME REPLACEMENTS ARE MADE OR EXISTING PLANTS ARE DEEMED ACCEPTABLE BY THE LANDSCAPE ARCHITECT.
   C. ALL REPLACEMENTS SHALL BE PLANTS OF THE SAME KIND AND SIZE SPECIFIED ON THE PLANT LIST OR THAT WHICH WAS TO REMAIN OR BE RELOCATED. THEY SHALL BE FURNISHED AND PLANTED AS SPECIFIED. THE COST SHALL BE BORNE BY THE CONTRACTOR. REPLACEMENTS RESULTING FROM REMOVAL, LOSS, OR DAMAGE DUE TO OCCUPANCY OF THE PROJECT IN ANY PART, VANDALISM, PHYSICAL DAMAGE BY ANIMALS, VEHICLES, ETC., AND LOSSES DUE TO CURTAILMENT OF WATER BY LOCAL AUTHORITIES SHALL BE APPROVED AND PAID FOR BY THE OWNER.
   D. PLANTS SHALL BE GUARANTEED FOR A PERIOD OF ONE YEAR AFTER INSPECTION AND PROVISIONAL ACCEPTANCE.
   E. AT THE END OF THE ESTABLISHMENT PERIOD, INSPECTION SHALL BE MADE AGAIN. ANY PLANT REQUIRED UNDER THIS CONTRACT THAT IS DEAD OR UNSATISFACTORY TO THE LANDSCAPE ARCHITECT OR OWNER SHALL BE REMOVED FROM THE SITE AND REPLACED DURING THE NORMAL PLANTING SEASON.
3. LAWN MAINTENANCE:
   A. BEGIN MAINTENANCE IMMEDIATELY AFTER EACH PORTION OF LAWN IS PLANTED AND CONTINUE FOR 8 WEEKS AFTER ALL LAWN PLANTING IS COMPLETED.
   B. WATER TO KEEP SURFACE SOIL MOIST, REPAIR WASHED OUT AREAS BY FILLING WITH TOPSOIL, LIMING, FERTILIZING AND RE-SEEDING; MOW TO 2 1/2 – 3 INCHES AFTER GRASS REACHES 3 1/2 INCHES IN HEIGHT, AND MOW FREQUENTLY ENOUGH TO KEEP GRASS FROM EXCEEDING 3 1/2 INCHES. WEED BY LOCAL SPOT APPLICATION OF SELECTIVE HERBICIDE ONLY AFTER GRASS IS WELL-ESTABLISHED.

LAWN WATERING SCHEDULE

THE FOLLOWING WATERING SCHEDULE COVERS ROUGHLY 8 WEEKS TO ESTABLISH A HEALTHY STAND OF GRASS FROM SEED. THE CONTRACTOR SHALL BE OBLIGATED TO ENSURE A HEALTHY STAND OF GRASS AT THE END OF THE MAINTENANCE/BOND PERIOD. ANY BARE OR DEAD AREAS IN THE LAWN SHALL BE PREPARED, RESEEDED AND REESTABLISHED PRIOR TO THE END OF THE MAINTENANCE/BOND PERIOD AND TO THE SATISFACTION OF THE PROJECT LANDSCAPE ARCHITECT AND THE OWNER.

IMPORTANT ASPECTS TO ATTAINING AND SUSTAINING A HEALTHY STAND OF GRASS ARE THE INSTALLATION OF TOPSOIL, SEED BED PREPARATION, ATTAINING OPTIMAL pH FOR THE INTENDED PLANT SPECIES, FERTILIZING, MULCH COVERING, AND SUFFICIENT WATERING PER THESE NOTES AND/OR PROJECT SPECIFICATIONS.

1. SEEDING SHALL BE DONE DURING THE SEASONS SPECIFIED IN THE LAWN SEED MIX NOTES AND/OR PROJECT SPECIFICATIONS.
2. AFTER THE SEEDBED IS PREPARED, SEED IS INSTALLED, AND MULCH IS APPLIED, WATER LIGHTLY TO KEEP THE TOP 2 INCHES OF SOIL CONSISTENTLY MOIST, NOT SATURATED. AT NO TIME SHOULD WATER BE APPLIED TO THE POINT OF RUNOFF OR THE DISPLACEMENT OF SEED.
3. DEPENDING ON SOIL TEMPERATURES, IT MAY TAKE SEVERAL WEEKS FOR GERMINATION TO OCCUR. DIFFERENT SPECIES WITHIN THE MIX GERMINATE AT DIFFERENT TIMES AND THEREFORE CONTRACTOR SHOULD CONTINUE THE LIGHT WATERING, AS DESCRIBED ABOVE, UNTIL THERE IS AT LEAST 2 INCHES OF GROWTH THROUGHOUT.
4. AT THIS POINT, WATERING FREQUENCY MAY BE REDUCED TO EVERY 3 TO 5 DAYS. WATER SHALL BE APPLIED TO WET A 6 INCH MINIMUM SOIL DEPTH TO PROMOTE HEALTHY DEEP ROOTS.
5. BEGIN MOWING ONCE PER WEEK AFTER THE GRASS HAS REACHED 3 INCHES HEIGHT. MOW TO A HEIGHT OF NO LESS THAN 2-½ INCHES. AFTER 2 TO 3 WEEKS OF MOWING, CONTINUE TO WATER TO A 6 INCH MINIMUM SOIL DEPTH AS NECESSARY PER WEATHER CONDITIONS, AND SOIL MOISTURE SENSORS IF APPLICABLE.

PLANTING SOIL SPECIFICATIONS

1. PLANTING SOIL, ALTERNATELY MAY BE REFERRED TO AS TOPSOIL, SHOULD BE FRIABLE, FERTILE, WELL DRAINED, FREE OF DEBRIS, TOXINS, TRASH AND STONES OVER 1/2" DIA., IT SHOULD HAVE A HIGH ORGANIC CONTENT SUITABLE TO SUSTAIN HEALTHY PLANT GROWTH AND SHOULD LOOK AESTHETICALLY PLEASING HAVING NO NOXIOUS ODORS.
2. PLANTING SOIL:

   REUSE SURFACE SOILS STOCKPILED ON SITE, VERIFYING COMPLIANCE WITH PLANTING SOIL AND TOPSOIL CRITERIA IN THIS SPECIFICATION THROUGH TESTING. CLEAN SURFACE SOIL OF ALL ROOTS, PLANTS, SOD, AND GRAVEL OVER 1" IN DIAMETER AND DELETERIOUS MATERIALS. IF ON-SITE SOILS ARE TO BE USED FOR PROPOSED PLANTING, THE CONTRACTOR SHALL DEMONSTRATE, THROUGH SOIL TESTING, THAT ON-SITE SOILS MEET THE SAME CRITERIA AS INDICATED IN NOTES PLANS AND SPECIFICATIONS.

   SUPPLEMENT WITH IMPORTED OR MANUFACTURED TOPSOIL FROM OFF SITE SOURCES WHEN TOPSOIL AND PLANTING SOIL QUANTITIES ARE INSUFFICIENT. OBTAIN SOIL DISPLACED FROM NATURALLY WELL-DRAINED SITES WHERE TOPSOIL OCCURS AT LEAST 4" DEEP. DO NOT OBTAIN FROM AGRICULTURAL LAND, BOGS, MARSHES OR CONTAMINATED SITES.

   CONTRACTOR SHALL TEST SOILS AND FURNISH SAMPLES UPON REQUEST. PACKAGED MATERIALS SHALL BE UNOPENED BAGS OR CONTAINERS, EACH BEARING A NAME, GUARANTEE, AND TRADEMARK OF THE PRODUCER. MATERIAL COMPOSITION, MANUFACTURER'S CERTIFIED ANALYSIS, AND THE WEIGHT OF THE MATERIALS. SOIL OR AMENDMENT MATERIALS SHALL BE STORED ON SITE TEMPORARILY IN STOCKPILES PRIOR TO PLACEMENT AND SHALL BE PROTECTED FROM INTRUSION OF CONTAMINANTS AND EROSION. AFTER MIXING, SOIL MATERIALS SHALL BE COVERED WITH A TARPAULIN UNTIL TIME OF ACTUAL USE.

   ALL PLANTING SOILS SHALL BE SUBMITTED FOR TESTING TO THE STATE COOPERATIVE EXTENSION SERVICE, OR APPROVED EQUAL, PRIOR TO DELIVERY TO THE SITE. CONTRACTOR SHALL FURNISH SOIL SAMPLES AND SOIL TEST RESULTS TO LANDSCAPE ARCHITECT OR OWNER AT A RATE OF ONE SAMPLE PER 500 CUBIC YARDS TO ENSURE CONSISTENCY ACROSS THE TOTAL VOLUME OF PLANTING SOIL REQUIRED. TEST RESULTS SHALL EVALUATE FOR ALL CRITERIA LISTED IN THIS SPECIFICATION. IF TESTING AGENCY DETERMINES THAT THE SOILS ARE DEFICIENT IN ANY MANNER AND MAY BE CORRECTED BY ADDING AMENDMENTS, THE CONTRACTOR SHALL FOLLOW STATED RECOMMENDATIONS FOR SOIL IMPROVEMENT AND FURNISH SUBMITTALS FOR ALL AMENDMENTS PRIOR TO DELIVERY OF SOIL TO THE PROJECT SITE.

   A. THE FOLLOWING TESTING SHOULD BE PERFORMED AND RESULTS GIVEN TO THE LANDSCAPE ARCHITECT FOR APPROVAL BEFORE INSTALLATION:
      a. PARTICLE SIZE ANALYSIS – LOAMY SAND: 60–75% SAND, 25–40% SILT, AND 5–15% CLAY.
      b. FERTILITY ANALYSIS: pH (5.5–6.5), SOLUBLE SALTS (LESS THAN 2 MMHO/CM), NITRATE, PHOSPHATE, POTASSIUM, CALCIUM AND MAGNESIUM
      c. ORGANIC MATTER CONTENT: 2.5–5% IN NATIVE SOILS; UP TO 10% IN AMENDED SOILS
      d. TOXIC SUBSTANCE ANALYSIS
      e. MATERIAL DRAINAGE RATE: 60% PASSING IN 2 MINUTES, 40% RETAINED
      f. NOT MORE THAN 1% OF MATERIAL SHALL BE RETAINED BY A #4 SIEVE

3. SOIL AMENDMENT FOR PLANT MATERIAL:
   IF SOIL ORGANIC CONTENT IS INADEQUATE, SOIL SHALL BE AMENDED WITH COMPOST OR ACCEPTABLE, WEED FREE, ORGANIC MATTER. ORGANIC AMENDMENT SHALL BE WELL COMPOSTED, PH RANGE OF 6–8; MOISTURE CONTENT 35–55% BY WEIGHT; PASSING THROUGH A 100% PASSING 1/4" SIEVE; SOLUBLE SALT CONTENT LESS THAN 0.5 MM HOS/CM; MEETING ALL APPLICABLE ENVIRONMENTAL CRITERIA FOR CLEAN FILL.

   A. ORGANIC MATTER AS A SOIL AMENDMENT: LEAF MOLD WITH 60–90% ORGANIC CONTENT BY WEIGHT, SHREDDED AND FULLY DECOMPOSED. DO NOT BEND OR BIND-TIE TREES OR SHRUBS IN SUCH A MANNER AS TO DAMAGE BARK, BREAK BRANCHES, OR DESTROY NATURAL SHAPE. PROVIDE PROTECTIVE COVERING DURING TRANSIT. DO NOT DROP BALLED AND BURLAPPED STOCK DURING DELIVERY OR HANDLING.
   B. SOIL IN BEDS AND PLANTING ISLANDS OTHER THAN BACKFILL MATERIAL AND TOPSOIL, SHOULD BE FRIABLE, WELL DRAINED, AND FREE OF DEBRIS, INCLUDING STONES AND TRASH.
   C. AMENDMENTS FOR BACK FILL IN TREE AND SHRUB PITS:
      a. GROUND LIMESTONE WITH A MIN. OF 88% TOTAL CALCIUM AND MAGNESIUM CARBONATES) USED PENDING RESULTS OF SOIL ANALYSIS.
      – BRING pH LEVELS TO 5.5 MIN. TO 6.5 FOR NON-ERICACEOUS PLANTS
      – BRING pH LEVELS TO 4.5 MIN. TO 5.5 FOR ERICACEOUS PLANTS
      b. TERRA-SORB BY 'PLANT HEALTH CARE' 800-421-9051 (SEE MANUFACTURER RECOMMENDATIONS) USED IN PLANTER BACKFILL MIXTURE WITH TREES AND SHRUBS.
      c. MYCOR-ROOT SAVER BY 'PLANT HEALTH CARE' 800-421-9051 (SEE MANUFACTURER RECOMMENDATIONS) USED IN BACKFILL MIXTURE WITH TREES.

4. WHERE PLANTING AREAS ARE PROPOSED FOR FORMER PAVED OR GRAVEL AREAS, BEDS SHALL BE EXCAVATED TO A MINIMUM 30" DEPTH AND, AT A MINIMUM, BE BACKFILLED WITH BOTTOM LAYER OF SANDY LOAM (ORGANIC CONTENT LESS THAN 2%) OVER WHICH TOPSOIL AND PLANTING SOILS WILL BE PLACED AT DEPTHS INDICATED IN PLANS, DETAILS AND NOTES.
5. CLEAN SOIL FILL IN LANDSCAPE AREAS:
   LANDSCAPE FILL MATERIAL BELOW PLANTING SOILS, SHALL HAVE THE PHYSICAL PROPERTIES OF A SANDY LOAM WITH AN ORGANIC CONTENT OF LESS THAN 2% AND A PH BETWEEN 5 – 7.
6. SOIL PLACEMENT:
   A. CONTRACTOR TO PROVIDE SIX INCHES (6") MINIMUM DEPTH PLANTING SOIL LAYER IN LAWN AREAS, TWELVE INCHES (12") MINIMUM DEPTH PLANTING SOIL LAYER IN GROUNDCOVER AND PERENNIAL AREAS, EIGHTEEN INCHES (18") MINIMUM DEPTH PLANTING SOIL LAYER IN SHRUB AREAS, AND THIRTY-SIX INCHES (36") MINIMUM DEPTH PLANTING SOIL LAYER IN TREE PLANTING AREAS.
   B. SCARIFY AND/OR TILL COMPACTED SUBSOILS TO A MINIMUM DEPTH OF 6 INCHES. THOROUGHLY MIX A 6 INCH DEPTH LAYER OF PLANTING SOIL INTO THE SUBSOIL FROM PLANTING SOIL LAYERS AT THE DEPTHS INDICATED ABOVE. PLANTING SOIL SHALL BE PLACED IN 12-18" LIFTS AND WATER THOROUGHLY BEFORE INSTALLING NEXT LIFT. REPEAT UNTIL DEPTHS AND FINISH GRADES HAVE BEEN ACHIEVED. NO SOILS SHALL BE PLACED IN A FROZEN OR MUDDY CONDITION.
   C. PLANTING SOIL PRESENT AT THE SITE, IF ANY, MAY BE USED TO SUPPLEMENT TOTAL AMOUNT REQUIRED. CONTRACTOR TO FURNISH AN ANALYSIS OF ON-SITE PLANTING SOIL UTILIZED IN ALL PLANTING AREAS.
7. SOIL CONDITIONING:
   A. ADJUST pH AND NUTRIENT LEVELS AS REQUIRED TO ENSURE AN ACCEPTABLE GROWING MEDIUM. LOWER pH USING ELEMENTAL SULFUR ONLY. PEAT MOSS OR COPPER SULFATE MAY NOT BE USED. GROUND LIMESTONE AS A SOIL AMENDMENT MATERIAL WILL ONLY BE USED PENDING RESULTS OF SOIL ANALYSIS. PROVIDE WITH MINIMUM 88% CALCIUM AND MAGNESIUM CARBONATES AND SHALL HAVE TOTAL 100% PASSING THE 10 MESH SIEVE, MINIMUM 90% PASSING 20 MESH SIEVE, AND MINIMUM 60% PASSING 100 MESH SIEVE.
   B. ALL DEBRIS EXPOSED FROM EXCAVATION AND CULTIVATION SHALL BE DISPOSED OF AT THE CONTRACTOR'S EXPENSE.
   C. SOIL MODIFICATIONS (PENDING RESULTS OF SOIL ANALYSIS):
      a. THOROUGHLY TILL ORGANIC MATTER (LEAF COMPOST) INTO THE TOP 6 TO 12 IN. OF MOST PLANTING SOILS TO IMPROVE THE SOIL'S ABILITY TO RETAIN WATER AND NUTRIENTS. ALL PRODUCTS SHOULD BE COMPOSTED TO A DARK COLOR AND BE FREE OF PIECES WITH IDENTIFIABLE LEAF OR WOOD STRUCTURE. AVOID MATERIAL WITH A pH HIGHER THAN 7.0. PEAT MOSS MAY NOT BE USED AS ORGANIC MATTER AMENDMENT.
      b. MODIFY HEAVY CLAY OR SILT (MORE THAN 40% CLAY OR SILT) BY ADDING COMPOSTED PINE BARK (UP TO 30% BY VOLUME) AND/OR GYPSUM. COARSE SAND MAY BE USED IF ENOUGH IS ADDED TO BRING THE SAND CONTENT TO MORE THAN 60% OF THE TOTAL MIX. IMPROVE DRAINAGE IN HEAVY SOILS BY PLANTING ON RAISED MOUNDS OR BEDS AND INCLUDING SUBSURFACE DRAINAGE LINES.
      c. MODIFY EXTREMELY SANDY SOILS (MORE THAN 85% SAND) BY ADDING ORGANIC MATTER AND/OR DRY, SHREDDED CLAY LOAM UP TO 30% OF THE TOTAL MIX.

SOD SPECIFICATIONS

1. SOD IS TO BE A TALL FESCUE/BLUEGRASS BLEND APPROXIMATELY 50/50% SOD IS TO BE INDIGENOUS TO THE AREA AND BE FURNISHED BY A REPUTABLE GROWER WITH A MINIMUM 5 YEARS EXPERIENCE.
2. PRIOR TO SODDING ALL AREAS ARE TO BE TOPSOILED, FINE GRADED, RAKED, WATERED LIGHTLY, AND FERTILIZED WITH A STARTER FERTILIZER.
3. ALL STONES GREATER THAN 2" DIAMETER SHALL BE REMOVED.
4. SOD TO BE INSTALLED PERPENDICULAR TO ALL SLOPED AREAS. SOD STRIPS TO BE LAYED OUT SO JOINTS ARE NOT CLOSER THAN ONE FOOT (1'-0") FROM EACH OTHER.
5. SOD IS TO BE WATERED AT A RATE OF AT LEAST ONE AND A HALF INCHES ($1\frac{1}{2}$") PER WEEK UNTIL ROOT MASS MENDS WITH SOIL. AFTER THIS HAS OCCURRED NORMAL WATERING OF AT LEAST ONE INCH (1") PER WEEK IS TO COMMENCE.
6. ALL SOD AREAS ARE TO BE ROLLED IF ANY HEAVING OR DEPRESSIONS OCCUR.

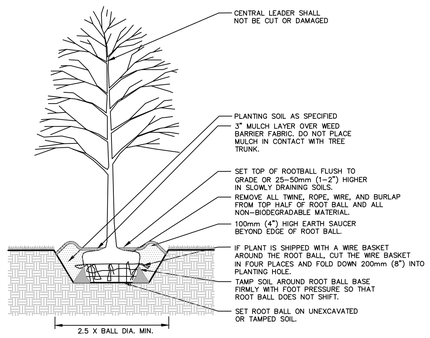

1 TREE PLANTING

NTS

GENERAL NOTE:

DUE TO GENERAL CONSTRUCTION ACTIVITIES AND ADJACENT SITE COMPACTION REQUIREMENTS, SUBGRADE SOILS WITHIN PROPOSED PLANTING AREAS TEND TO BECOME HIGHLY COMPACTED. IN ORDER TO CREATE A HEALTHY GROWTH MEDIUM TO ALLOW PROPOSED PLANTINGS TO ESTABLISH A VIGOROUS ROOT MASS, THIS SUBGRADE SOIL MUST UNDERGO A RESTORATION PROCESS. IN ADDITION, IMPORTED OR AMENDED EXISTING SOILS SHALL BE MIXED WITH SUBGRADE SOILS WHERE THEY MEET IN ORDER TO CREATE A TRANSITIONAL GRADIENT TO ALLOW FOR PROPER DRAINAGE.

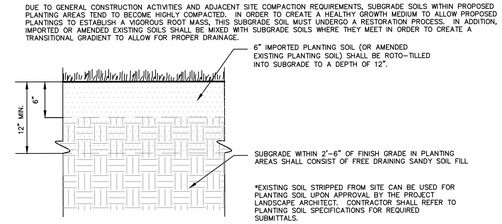

PLANTING SOIL WITHIN AREAS OF CUT OR RAISED GRADE

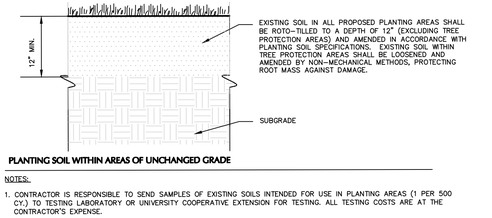

PLANTING SOIL WITHIN AREAS OF UNCHANGED GRADE

NOTES:

1. CONTRACTOR IS RESPONSIBLE TO SEND SAMPLES OF EXISTING SOILS INTENDED FOR USE IN PLANTING AREAS (1 PER 500 C.Y.) TO TESTING LABORATORY OR UNIVERSITY COOPERATIVE EXTENSION FOR TESTING. ALL TESTING COSTS ARE AT THE CONTRACTOR'S EXPENSE.
2. RECYCLED CRUSHED CONCRETE AND ASPHALT MILLINGS SHALL NOT BE PLACED WITHIN 2'-6" OF FINISH GRADE IN PROPOSED LANDSCAPE AREAS.
3. IMPORTED FILL SHALL CONTAIN NO CONTAMINATION IN EXCEEDENCE OF THE APPLICABLE STATE ENVIRONMENTAL STANDARDS AND MEET THE ENVIRONMENTAL REQUIREMENTS FOR THE PROJECT. THE CONTRACTOR SHALL PROVIDE DOCUMENTATION OF COMPLIANCE PRIOR TO DELIVERY OF ANY FILL TO THE SITE.
4. CONTRACTOR TO LIGHTLY COMPACT ALL PLACED PLANTING SOILS AND RAISE GRADES ACCORDINGLY TO ALLOW FOR FUTURE SETTLEMENT OF PLANTING SOILS (TYP.)
5. NO STONES, WOOD CHIPS, OR DEBRIS LARGER THAN 1/2" SHALL BE ACCEPTABLE WITHIN PLANTING AREAS.

2 PLANTING SOIL

NTS

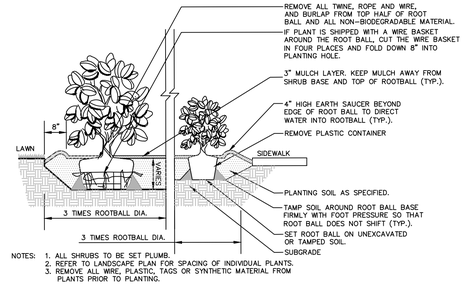
LARGE SHRUB (B&B)
SMALL SHRUB (CONTAINER)
REMOVE ALL TWINE, ROPE AND WIRE, AND BURLAP FROM TOP HALF OF ROOT BALL AND ALL NON-BIODEGRADABLE MATERIAL.
IF PLANT IS SHIPPED WITH A WIRE BASKET AROUND THE ROOT BALL, CUT THE WIRE BASKET IN FOUR PLACES AND FOLD DOWN 8" INTO PLANTING HOLE.
3" MULCH LAYER. KEEP MULCH AWAY FROM SHRUB BASE AND TOP OF ROOTBALL (TYP.).
4" HIGH EARTH SAUCER BEYOND EDGE OF ROOT BALL TO DIRECT WATER INTO ROOTBALL (TY

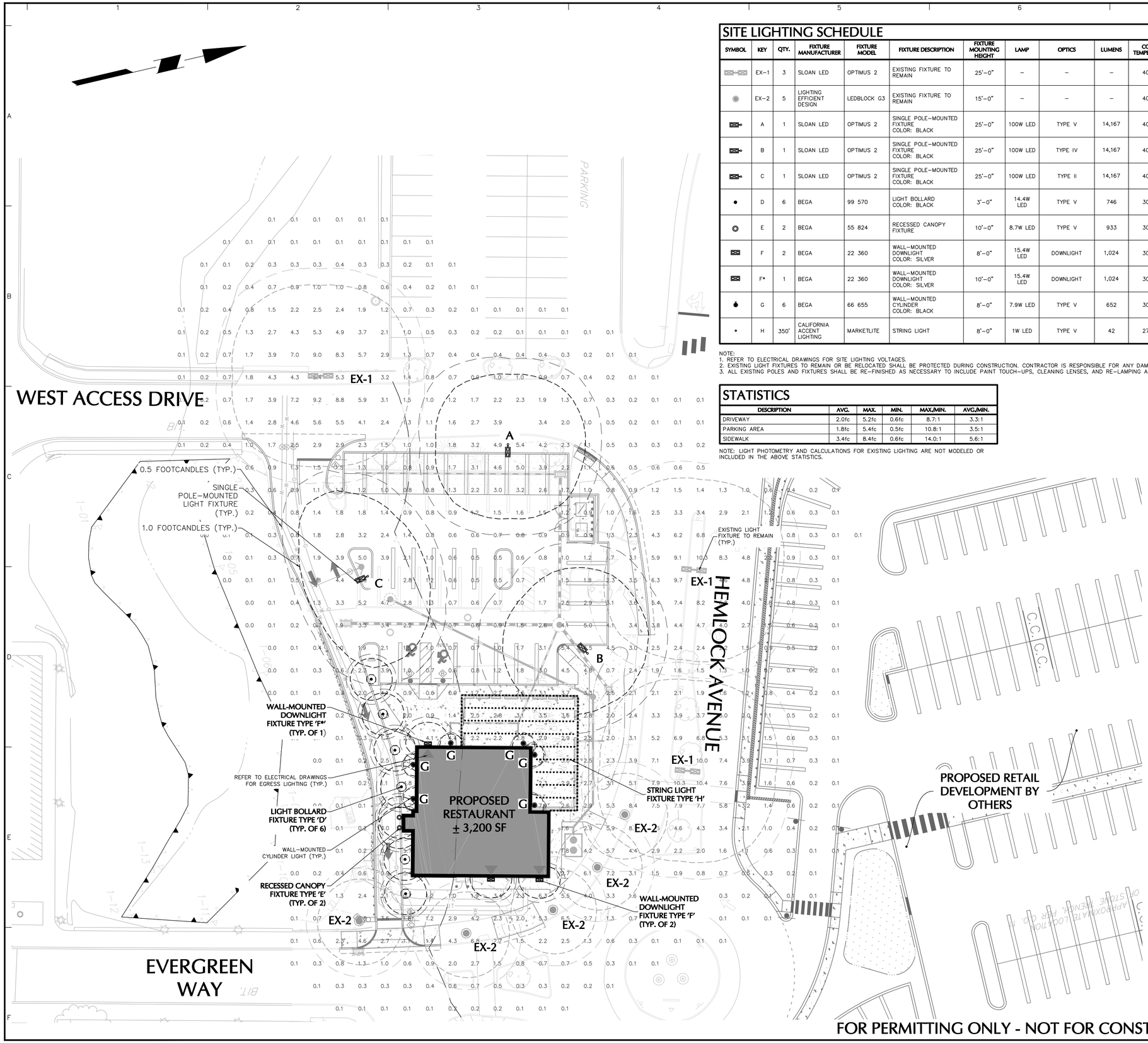

SITE LIGHTING SCHEDULE

SYMBOL	KEY	QTY.	FIXTURE MANUFACTURER	FIXTURE MODEL	FIXTURE DESCRIPTION	FIXTURE MOUNTING HEIGHT	LAMP	OPTICS	LUMENS	COLOR TEMPERATURE	LLF	FIXTURE CATALOGUE NO.	POLE MANUFACTURER	POLE DESCRIPTION	POLE LENGTH	POLE CATALOGUE NO.	REMARKS
	EX–1	3	SLOAN LED	OPTIMUS 2	EXISTING FIXTURE TO REMAIN	25'–0"	–	–	–	4000K	–	–	–	EXISTING POLE TO REMAIN	–	–	–
	EX–2	5	LIGHTING EFFICIENT DESIGN	LEDBLOCK G3	EXISTING FIXTURE TO REMAIN	15'–0"	–	–	–	4000K	–	–	–	EXISTING POLE TO REMAIN	–	–	–
	A	1	SLOAN LED	OPTIMUS 2	SINGLE POLE–MOUNTED FIXTURE COLOR: BLACK	25'–0"	100W LED	TYPE V	14,167	4000K	0.90	LCA–SB–100W–U–40K –T5–BK–D2– STRAIGHT ARM–BK	SLOAN LED	ROUND TAPERED STEEL; COLOR: BLACK	25'–0"	SP–RTS–5251–BK	MOUNTED ON FLUSH CONCRETE BASE
	B	1	SLOAN LED	OPTIMUS 2	SINGLE POLE–MOUNTED FIXTURE COLOR: BLACK	25'–0"	100W LED	TYPE IV	14,167	4000K	0.90	LCA–SB–100W–U–40K –T4–BK–D2– STRAIGHT ARM–BK	SLOAN LED	ROUND TAPERED STEEL; COLOR: BLACK	25'–0"	SP–RTS–5251–BK	MOUNTED ON FLUSH CONCRETE BASE
	C	1	SLOAN LED	OPTIMUS 2	SINGLE POLE–MOUNTED FIXTURE COLOR: BLACK	25'–0"	100W LED	TYPE II	14,167	4000K	0.90	LCA–SB–100W–U–40K –T2–BK–D2– STRAIGHT ARM–BK	SLOAN LED	ROUND TAPERED STEEL; COLOR: BLACK	25'–0"	SP–RTS–5251–BK	MOUNTED ON FLUSH CONCRETE BASE
	D	6	BEGA	99 570	LIGHT BOLLARD COLOR: BLACK	3'–0"	14.4W LED	TYPE V	746	3000K	0.90	99570–K3–BLK	–	–	–	–	REFER TO ARCHITECTURAL DRAWINGS FOR EXACT LOCATIONS
	E	2	BEGA	55 824	RECESSED CANOPY FIXTURE	10'–0"	8.7W LED	TYPE V	933	3000K	0.90	55824–K3	–	–	–	–	REFER TO ARCHITECTURAL DRAWINGS FOR EXACT LOCATIONS
	F	2	BEGA	22 360	WALL–MOUNTED DOWNLIGHT COLOR: SILVER	8'–0"	15.4W LED	DOWNLIGHT	1,024	3000K	0.90	22360–K3–BLK	–	–	–	–	REFER TO ARCHITECTURAL DRAWINGS FOR EXACT LOCATIONS
	F*	1	BEGA	22 360	WALL–MOUNTED DOWNLIGHT COLOR: SILVER	10'–0"	15.4W LED	DOWNLIGHT	1,024	3000K	0.90	22360–K3–BLK	–	–	–	–	REFER TO ARCHITECTURAL DRAWINGS FOR EXACT LOCATIONS
	G	6	BEGA	66 655	WALL–MOUNTED CYLINDER COLOR: BLACK	8'–0"	7.9W LED	TYPE V	652	3000K	0.90	66655–K3–BLK	–	–	–	–	REFER TO ARCHITECTURAL DRAWINGS FOR EXACT LOCATIONS
	H	350'	CALIFORNIA ACCENT LIGHTING	MARKETLITE	STRING LIGHT	8'–0"	1W LED	TYPE V	42	2700K	0.90	ML2000–18"OC–2.7K–GSF–OUTDOOR –BK–350'	–	–	–	–	–

NOTE:
1. REFER TO ELECTRICAL DRAWINGS FOR SITE LIGHTING VOLTAGES.
2. EXISTING LIGHT FIXTURES TO REMAIN OR BE RELOCATED SHALL BE PROTECTED DURING CONSTRUCTION. CONTRACTOR IS RESPONSIBLE FOR ANY DAMAGE TO THESE FIXTURES INCLUDING REPLACEMENT OF REFURBISHMENT.
3. ALL EXISTING POLES AND FIXTURES SHALL BE RE–FINISHED AS NECESSARY TO INCLUDE PAINT TOUCH–UPS, CLEANING LENSES, AND RE–LAMPING AND RE–BALLASTING.

STATISTICS

DESCRIPTION	AVG.	MAX.	MIN.	MAX./MIN.	AVG./MIN.
DRIVEWAY	2.0fc	5.2fc	0.6fc	8.7:1	3.3:1
PARKING AREA	1.8fc	5.4fc	0.5fc	10.8:1	3.5:1
SIDEWALK	3.4fc	8.4fc	0.6fc	14.0:1	5.6:1

NOTE: LIGHT PHOTOMETRY AND CALCULATIONS FOR EXISTING LIGHTING ARE NOT MODELED OR INCLUDED IN THE ABOVE STATISTICS.

SEE SHEET LL501 FOR LIGHTING NOTES AND DETAILS

FOR PERMITTING ONLY - NOT FOR CONSTRUCTION

20 0 5 10 20
SCALE IN FEET

Date	Description	No.

Revisions

STATE OF CONNECTICUT MICHAEL SZURA LICENSED LANDSCAPE ARCHITECT

MICHAEL SZURA
LICENSED LANDSCAPE ARCHITECT
STATE LIC. No. 1339

LANGAN
Langan Engineering and Environmental Services, Inc.
555 Long Wharf Drive
New Haven, CT 06511
T: 203.562.5771 F: 203.789.6142 www.langan.com

Project
RESTAURANT DEVELOPMENT AT EVERGREEN WALK
MAP No. 27, BLOCK No. 15, UNIT No. 2
601 EVERGREEN WAY
SOUTH WINDSOR
HARTFORD COUNTY CONNECTICUT

Drawing Title
LANDSCAPE LIGHTING PLAN

Project No. 140222801
Date 08/25/2021
Drawn By AC
Checked By JA
Drawing No. LL101
Sheet 0 of 1

LANGAN
Project No. 140222801

© 2020 Langan

LIGHTING NOTES:

GENERAL

1. POINT–BY–POINT CALCULATIONS PROVIDED WITHIN HAVE BEEN PREPARED IN ACCORDANCE TO IESNA STANDARDS AND IN CONSIDERATION OF THE VARIABLES WITHIN THESE NOTES AND SITE LIGHTING SCHEDULE. THE VALUES SHOWN ON THE PLANS ARE NOT AN INDICATION OF THE INITIAL LIGHT INTENSITIES OF THE LAMPS. THESE VALUES ARE AN APPROXIMATION OF THE MAINTAINED INTENSITIES DELIVERED TO THE GROUND PLANE USING INDUSTRY STANDARD LIGHT LOSS FACTORS (LLF) WHICH COVER LAMP DEGRADATION AND NATURAL BUILDUP/ DIRT DEGRADATION ON THE FIXTURE LENS. THE LIGHTING PLAN IS DESIGNED WITH AN INDUSTRY STANDARD LLF IN ACCORDANCE WITH GUIDANCE AS PROVIDED BY IESNA. MINOR VARIATIONS IN TOPOGRAPHY, PHYSICAL OBSTRUCTIONS, AMBIENT OR ADJACENT LIGHT SOURCES AND/OR OTHER POTENTIAL IMPACTS HAVE NOT BEEN INCLUDED IN THESE CALCULATIONS. THEREFORE, AS–BUILT LIGHT INTENSITIES MAY VARY, IN EITHER DIRECTION, FROM WHAT IS EXPLICITLY PORTRAYED WITHIN THESE DRAWINGS.NO GUARANTEE OF LIGHT LEVELS IS EXPRESSED OR IMPLIED BY THE POINT BY POINT CALCULATIONS SHOWN ON THESE PLANS.

2. LIGHT LEVEL POINT SPACING IS 10 FT. LEFT TO RIGHT AND 10 FT. TOP TO BOTTOM. POINT BY POINT CALCULATIONS ARE BASED ON THE LIGHT LOSS FACTOR AS STATED IN THE LIGHTING SCHEDULE.

COMPLIANCE

3. ALL SITE LIGHTING RELATED WORK AND MATERIALS SHALL COMPLY WITH CITY, COUNTY, AND OTHER APPLICABLE GOVERNING AUTHORITY REQUIREMENTS.

4. LIGHTING LAYOUT COMPLIES WITH THE ILLUMINATING ENGINEERING SOCIETY OF NORTH AMERICA (IESNA) SAFETY STANDARDS FOR LIGHT LEVELS.

COORDINATION

5. CONTRACTOR TO COORDINATE POWER SOURCE WITH LIGHT FIXTURES TO ENSURE ALL SITE LIGHTING IS OPERATING EFFECTIVELY, EFFICIENTLY AND SAFELY.

6. REFER TO ELECTRIFICATION PLAN FOR PROVIDING ADEQUATE POWER FOR SITE LIGHTING.

7. CONTRACTOR TO COORDINATE LOCATION OF EASEMENTS, UNDERGROUND UTILITIES AND DRAINAGE BEFORE DRILLING POLE BASES.

8. INSTALLATION OF ALL LIGHTING FIXTURES, POLES, FOOTINGS, AND FEEDER CABLE TO BE COORDINATED WITH ALL SITE WORK TRADES TO AVOID CONFLICT WITH FINISHED AND PROPOSED WORK.

9. CONTRACTOR TO COORDINATE INSTALLATION OF UNDERGROUND FEEDER CABLE FOR EXTERIOR LIGHTING WITH EXISTING AND PROPOSED UTILITIES, SITE DRAINAGE SYSTEMS, AND PAVING. CONTRACTOR SHALL PROMPTLY NOTIFY THE OWNER'S REPRESENTATIVE SHOULD ANY UTILITIES, NOT SHOWN ON THE PLANS, BE FOUND DURING EXCAVATIONS.

POLES AND FOOTINGS

10. PROVIDE A CONCRETE BASE FOR EACH LIGHT POLE AT THE LOCATIONS INDICATED ON THE CONSTRUCTION DRAWINGS AND/OR IN ACCORDANCE WITH PROJECT PLANS AND SPECIFICATIONS RELATING DIRECTLY TO CAST–IN–PLACE CONCRETE. THE USE OF ALTERNATE LIGHTING FOUNDATIONS, SUCH AS PRECAST, MAY CHANGE THE SIZING AND REINFORCEMENT REQUIREMENTS FROM THOSE SHOWN ON THESE PLANS. CONTRACTOR TO SUBMIT SHOP DRAWINGS FOR REVIEW PRIOR TO ORDERING ANY SUBSTITUTED PRODUCTS.

11. CONTRACTOR SHALL EXAMINE AND VERIFY THAT SOIL CONDITIONS ARE SUITABLE TO SUPPORT LOADS EXERTED UPON THE FOUNDATIONS DURING EXCAVATION. CONTRACTOR SHALL NOTIFY ENGINEER OF ANY UNSATISFACTORY CONDITIONS.

12. POLE FOUNDATIONS SHALL NOT BE POURED IF FREE STANDING WATER IS PRESENT IN EXCAVATED AREA.

13. ALL POLES 25 FT OR GREATER SHALL BE EQUIPPED WITH FACTORY INSTALLED VIBRATION DAMPENERS.

WALL MOUNTED FIXTURES

14. CONTRACTOR TO COORDINATE INSTALLATION OF ALL THE WALL MOUNTED FIXTURES AND ELECTRICAL CONNECTIONS TO SITE STRUCTURE(S) WITH BUILDING MEP, ARCHITECT, AND/OR OWNER.

15. INSTALLATION AND ELECTRICAL CONNECTIONS FOR WALL MOUNTED FIXTURES TO BE COORDINATED WITH ARCHITECTURAL, STRUCTURAL, UTILITY AND SITE PLANS AND TO BE IN ACCORDANCE WITH ALL APPLICABLE CODES.

ADJUSTMENT AND INSPECTION

16. CONTRACTOR TO OPERATE EACH LUMINAIRE AFTER INSTALLATION AND CONNECTION. INSPECT FOR IMPROPER CONNECTIONS AND OPERATION.

17. CONTRACTOR TO AIM AND ADJUST ALL LUMINAIRES TO PROVIDE ILLUMINATION LEVELS AND DISTRIBUTION AS INDICATED ON THE CONSTRUCTION DRAWINGS OR AS DIRECTED BY THE LANDSCAPE ARCHITECT AND/OR OWNER.

18. CONTRACTOR TO CONFIRM THAT LIGHT FIXTURES, TILT ANGLE AND AIMING MATCH SPECIFICATIONS ON THE PLANS.

REQUIREMENTS FOR ALTERNATES

19. ALL LIGHTING SUBSTITUTIONS MUST BE MADE WITHIN 14 DAYS PRIOR TO THE BID DATE TO PROVIDE AMPLE TIME FOR REVIEW AND TO ISSUE AN ADDENDUM INCORPORATING THE SUBSTITUTION WITH THE FOLLOWING REQUIREMENTS:
   A. ANY SUBSTITUTION TO LIGHTING FIXTURES, POLES, ETC. MUST BE APPROVED BY THE OWNER, ENGINEER AND TENANTS. ANY COST ASSOCIATED WITH REVIEW AND/OR APPROVAL OF THE SUBSTITUTIONS SHALL BE ENTIRELY BORNE BY THE CONTRACTOR
   B. COMPUTER PREPARED PHOTOMETRIC LAYOUT OF THE PROPOSED LIGHTED AREA WHICH INDICATES, BY ISOFOOTCANDLE, THE SYSTEM'S PERFORMANCE.
   C. A PHOTOMETRIC REPORT FROM A NATIONAL INDEPENDENT TESTING LABORATORY WITH REPORT NUMBER, DATE, FIXTURE CATALOG NUMBER, LUMINAIRE AND LAMP SPECIFICATIONS; IES CALCULATIONS, POINT BY POINT FOOT CANDLE PLAN, STATISTIC ZONES SHOWING AVERAGE, MAXIMUM, MINIMUM AND UNIFORMITY RATIOS, SUMMARY, ISOLUX PLOT, AND CATALOGUE CUTS. CATALOGUE CUTS MUST IDENTIFY OPTICS, LAMP TYPE, DISTRIBUTION TYPE, REFLECTOR, LENS, BALLASTS, WATTAGE, VOLTAGE, FINISH HOUSING DESCRIPTION AND ALL OTHER PERTINENT INFORMATION.
   D. POLE MANUFACTURER AASHTO CALCULATIONS INDICATING THE POLE AND ANCHOR BOLTS BEING SUBMITTED ARE CAPABLE OF SUPPORTING THE POLE AND FIXTURE SYSTEMS BEING UTILIZED IN ACCORDANCE WITH THE CONTRACT DOCUMENTS.
   E. THE UNDERWRITERS LABORATORY LISTING AND FILE NUMBER FOR THE SPECIFIC FIXTURE(S) TO BE UTILIZED.
   F. A COLOR PHOTOGRAPH THAT CLEARLY SHOWS THE REPLACEMENT FIXTURE POLE MOUNTED, THE FIXTURE'S COLOR, FINISH, AND PHYSICAL CHARACTERISTICS.

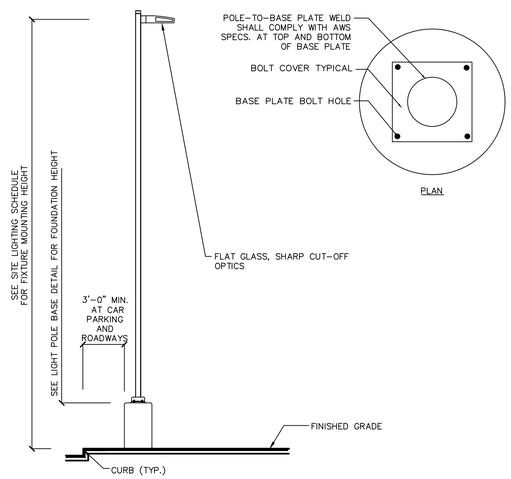

SECTION

NOTES:

1. ALL LIGHT POLES SHALL BE EQUIPPED WITH FACTORY INSTALLED VIBRATION DAMPENERS.
2. CURB LOCATION IS SHOWN FOR SCHEMATIC PURPOSE. LIGHT POLES SHALL BE LOCATED PER THE LIGHTING PLANS.

1 LIGHT FIXTURE AND POLE N.T.S

Select a pole

Example: SP-SSA-4141-WH — ***14-ft aluminum, 4" square, 11Ga., white pole***

Product	Form	Profile	Material	Size	Height*	Wall*	Color
SP SloanLED pole	**S** Square pole	**S** Straight sides	**A** Aluminum	**4** 4"	**8** 8-ft	**10** 1/8" wall / 11Ga.	**BK** Black
	R Round pole	**T** Tapered†	**S** Steel	**5** 5"	**10** 10-ft	**20** 20-ft	**BZ** Bronze
				6 6"	**12** 12-ft	**25** 25-ft	**WH** White
					14 14-ft	**30** 30-ft	
					15 15-ft	**35** 35-ft	
					16 16-ft		

Select an accessory

Refer to product spec sheet for ordering numbers.

- Area light cross arms
- Pole top flood mount brackets
- Pole top reducers
- Cross arm brackets
- Spoke brackets
- Bull horns

* Tapered poles by special quote only.
† Weight may be limited by material and wall thickness. Contact SloanLED for more information.

2 LIGHT POLE N.T.S

LED wall luminaire - light output on one side — **BEGA**

Application
This LED wall mounted luminaire has light output in one direction. Arranged individually or in groups, it is a great design element for a host of lighting applications. Downward orientation only.
Materials
Luminaire housing and constructed of die-cast marine grade, copper free (≤0.3% copper content) A360.0 aluminum alloy
Matte safety glass
Frame gasket with silicone gasket
Mechanically captive stainless steel fasteners
NRTL listed to North American Standards, suitable for wet locations
Protection class IP65
Weight: 4.2 lbs
Electrical
Operating voltage: 120-277VAC
Minimum start temperature: -30°C
LED module wattage: 15.4W
System wattage: 20.5W
Controllability: 0-10V, TRIAC, and ELV dimmable
Color rendering index: Ra > 80
Luminaire lumens: 1024 lumens [3000K]
LED service life (L70): 60,000 hours
LED color temperature
☐ 4000K - Product number = **K4**
☐ 3500K - Product number = **K35**
☐ 3000K - Product number = **K3 (EXPRESS)**
☐ 2700K - Product number = **K27**
☐ Amber - Product number = **AMB**
Wildlife friendly amber LED - Optional
Luminaire is optionally available with a narrow bandwidth, amber LED source (585-600nm) approved by the FWC. This light output is suggested for use within close proximity to sea turtle nesting and hatching habitats. Electrical and control information may vary from standard luminaire.
LED module wattage: 12.0W (Amber)
System wattage: 15.0W (Amber)
Luminaire lumens: 243 lumens (Amber)
BEGA can supply you with suitable LED replacement modules for up to 20 years after the purchase of LED luminaires - see website for details

Finish
All BEGA standard finishes are matte, textured polyester powder coat with minimum 3 mil thickness.
Available colors: ☐ Black (BLK) ☐ White (WHT) ☐ RAL: ☐ Bronze (BRZ) ☐ Silver (SLV) ☐ CUS:

Type:
BEGA Product:
Project:
Modified:

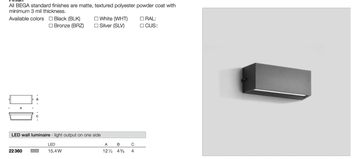

	LED	A	B	C
22360	15.4W	12½	4⅞	4

BEGA 1000 BEGA Way, Carpinteria, CA 93013 (800) 684-0533 info@bega-us.com
Due to the dynamic nature of lighting products and the associated technologies, luminaire data on this sheet is subject to change at the discretion of BEGA North America. For the most current technical data, please refer to bega-us.com
© copyright BEGA 2019 Updated 09/18/19

6 WALL-MOUNTED DOWNLIGHT 'F AND F*' N.T.S

Optimus 2

LED area luminaire
LCA-SB

PAGE 1 OF 4

Ordering information

Luminaire
Example: LCA-SB-300W-U-50K-T5-BK-X-D1

LCA-SB-	100	-	U	-	40K	-	T4	-	BK	-X-	D2
Product:	Power		Input voltage		Color temp. (CCT)		Light distribution		Body color		Control
	60W 60 Watt		**U** 120-277 VAC		**30K** 3000 K		**T2** Type II		**BK** Black'		**D1** 0-10VDC/PWM control
	100W 100 Watt		**H** 347-480 VAC		**40K** 4000 K		**T3** Type III		**BZ** Bronze		**D2** Motion/daylight sensor control
	150W 150 Watt				**50K** 5000 K		**T4** Type IV		**GY** Gray'		**D3** 0-10VDC/PWM + 3-pin photocell socket
	200W 200 Watt						**T5** Type V		**WT** White		**D5** 0-10VDC/PWM + 5-pin photocell socket
	300W 300 Watt										

Product description

Optimus 2 LED pole mount lights feature a full selection of optics, mounting options, and outputs, making it flexible enough to suit any outdoor lighting need. Ideal for schools, offices, retail, fuel stations, and parking lots, Optimus 2 is designed for high-performance, durability, and fast, easy installation and connection.

- Dimming drivers standard
- Smaller footprint and lower EPA ratings over equivalent output HID fixtures
- Wide range of mounting configurations
- Pre-cast top and bottom control mount locations for future proofing
- 3 or 5-pin photocontrol options

Performance summary

CCT		3000 K, 4000 K, 5000 K
Lumens	60 W	8,628 – 9,776
	100 W	12,868 – 14,167
	150 W	20,348 – 22,411
	200 W	25,686 – 29,990
	300 W	38,078 – 41,652
Light distribution		Type II, Type III, Type IV, Type V
Body colors		Black', Bronze, Gray', White

Mounting†

Example: LCA-SB-STRAIGHTARM

LCA-SB-	STRAIGHTARM	BK
Product	Mounting	Color
	STRAIGHTARM Straight arm	**BK** Black'
	ADJARM Adjustable arm	**BZ** Bronze
	SLIPFITTER Slip-fitter	**GY** Gray'
	TRUNNION Trunnion	**WT** White
	YOKE Yoke	

Backlight Shield Kits‡

Part number	Description
6O1227-S	Backlight Shield Kit, Small (fits 60 & 100 W)
6O1227-H	Backlight Shield Kit, Medium (fits 150 & 200 W)
6O1227-L	Backlight Shield Kit, Large (fits 300 W)

UL LISTED — CSA C22.2 — IP65 — IK08

SloanLED Leaders in LED Technology

* Available as special order. Contact SloanLED Sales.
† Mounting ordered separately.
‡ Backlight shield kits are field installed and include fasteners.

2 LIGHT FIXTURE 'A, B, AND C' N.T.S

Wall luminaire - single-sided light output — **BEGA**

Application
Wall luminaires with single-sided light output designed to provide up or down lighting effects for interior and exterior locations
Materials
Luminaire housing and faceplate constructed of die-cast marine grade, copper free (≤0.3% copper content) A360.0 aluminum alloy
Clear safety glass
Reflector made of pure anodized aluminum
Frame gasket with silicone gasket
Mechanically captive stainless steel fasteners
NRTL listed to North American Standards, suitable for wet locations
Protection class IP65
Weight: 4.4 lbs
Electrical
Operating voltage: 120-277VAC
Minimum start temperature: -30°C
LED module wattage: 7.9W
System wattage: 10.6W
Controllability: 0-10V dimmable
Color rendering index: Ra > 80
Luminaire lumens: 652 lumens [3000K]
LED service life (L70): 60,000 hours
LED color temperature
☐ 4000K - Product number = **K4 (EXPRESS)**
☐ 3500K - Product number = **K35**
☐ 3000K - Product number = **K3 (EXPRESS)**
☐ 2700K - Product number = **K27**
☐ Amber - Product number = **AMB**
Wildlife friendly amber LED - Optional
Luminaire is optionally available with a narrow bandwidth, amber LED source (585-600nm) approved by the FWC. This light output is suggested for use within close proximity to sea turtle nesting and hatching habitats. Electrical and control information may vary from standard luminaire.
LED module wattage: 9.0W (Amber)
System wattage: 11.6W (Amber)
Luminaire lumens: 220 lumens (Amber)
BEGA can supply you with suitable LED replacement modules for up to 20 years after the purchase of LED luminaires - see website for details

Finish
All BEGA standard finishes are matte, textured polyester powder coat with minimum 3 mil thickness.
Available colors: ☐ Black (BLK) ☐ White (WHT) ☐ RAL: ☐ Bronze (BRZ) ☐ Silver (SLV) ☐ CUS:

Available Accessories
☐ **79547** Surface mounted wiring box
See individual accessory spec sheet for details.

Type:
BEGA Product:
Project:
Modified:

	LED	A	B	C	D	Required wiring box
66655	7.9W	19.5"	4⅞	9	6⅞	1½	**19107**

ø = Beam angle

BEGA 1000 BEGA Way, Carpinteria, CA 93013 (800) 684-0533 info@bega-us.com
Due to the dynamic nature of lighting products and the associated technologies, luminaire data on this sheet is subject to change at the discretion of BEGA North America. For the most current technical data, please refer to bega-us.com
© copyright BEGA 2019 Updated 09/18/19

Signature Date

7 WALL-MOUNTED CYLINDER LIGHT 'G' N.T.S

LED bollard - 360° distribution — **BEGA**

Application
LED bollard with shielded 360° light distribution. This luminaire is designed for use with rotationally symmetric illumination of ground surfaces. Provided with mounting system that allows the luminaire to be adjusted independent of anchor bolt orientation.
Materials
Luminaire housing and base constructed of die-cast and extruded marine grade, copper free (≤0.3% copper content) A360.0 aluminum alloy
Borosilicate glass lens
Reflector made of pure anodized aluminum
High temperature silicone gasket
Stainless steel screw clamps
Galvanized steel rough in ceiling pan with through wiring box
NRTL listed to North American Standards, suitable for wet locations
Protection class IP65
Weight: 19.4 lbs
Electrical
Operating voltage: 120-277VAC
Minimum start temperature: -30°C
LED module wattage: 8.7W
System wattage: 11W
Controllability: 0-10V dimming down to 0.1%
Color rendering index: Ra > 80
Luminaire lumens: 893 lumens [3000K]
Lifetime at Ta =15°C: 77,000 h (L70)
Lifetime at Ta =35°C: 53,000 h (L70)
LED color temperature
☐ 4000K - Product number = **K4**
☐ 3500K - Product number = **K35**
☐ 3000K - Product number = **K3**
☐ 2700K - Product number = **K27**
BEGA can supply you with suitable LED replacement modules for up to 20 years after the purchase of LED luminaires - see website for details

Finish
All BEGA standard finishes are matte, textured polyester powder coat with minimum 3 mil thickness.
Available colors: ☐ Black (BLK) ☐ White (WHT) ☐ RAL: ☐ Bronze (BRZ) ☐ Silver (SLV) ☐ CUS:

Type:
BEGA Product:
Project:
Modified:

	LED	A	B	Average
99570	14.4W	6⅞	38½	**79167**

BEGA 1000 BEGA Way, Carpinteria, CA 93013 (800) 684-0533 info@bega-us.com
Due to the dynamic nature of lighting products and the associated technologies, luminaire data on this sheet is subject to change at the discretion of BEGA North America. For the most current technical data, please refer to bega-us.com
© copyright BEGA 2019 Updated 07/16/19

4 LIGHT BOLLARD 'D' N.T.S

LED recessed ceiling downlight - wide beam — **BEGA**

Application
Designed for down lighting atriums, canopies, passages, and other interior and exterior locations featuring a symmetrical wide beam light distribution.
Materials
Luminaire housing constructed of die-cast marine grade, copper free (≤0.3% copper content) A360.0 aluminum alloy
Faceplate constructed of 316 grade machined stainless steel
Clear safety glass
Reflector made of pure anodized aluminum
Frame gasket with silicone gasket
Stainless steel screw clamps
Galvanized steel rough in ceiling pan with through wiring box
NRTL listed to North American Standards, suitable for wet locations
Protection class IP65
Weight: 0.8 lbs
Electrical
Operating voltage: 120-277VAC
Minimum start temperature: -20°C
LED module wattage: 8.7W
System wattage: 11W
Controllability: 0-10V dimming down to 0.1%
Color rendering index: Ra > 80
Luminaire lumens: 893 lumens [3000K]
Lifetime at Ta =15°C: 140,000 h (L70)
Lifetime at Ta =40°C: 140,000 h (L70)
LED color temperature
☐ 4000K - Product number = **K4**
☐ 3500K - Product number = **K35**
☐ 3000K - Product number = **K3**
☐ 2700K - Product number = **K27**
BEGA can supply you with suitable LED replacement modules for up to 20 years after the purchase of LED luminaires - see website for details

Finish
All powder coated stainless steel.
Custom colors are not available.
Stainless steel requires regular cleaning and maintenance, much like household appliances to maintain its luster and prevent tarnishing or the appearance of rust like stains.

Type:
BEGA Product:
Project:
Modified:

	LED	B	A	B	C
55424	8.7W	81°	4⅞	3½	18

ø – Beam angle

BEGA 1000 BEGA Way, Carpinteria, CA 93013 (800) 684-0533 info@bega-us.com
Due to the dynamic nature of lighting products and the associated technologies, luminaire data on this sheet is subject to change at the discretion of BEGA North America. For the most current technical data, please refer to bega-us.com
© copyright BEGA 2019 Updated 07/16/19

5 RECESSED CANOPY LIGHT 'E' N.T.S

LAMP SHAPES

G Shape (GSF)

Material: Polymer Plastic
Appearance: Frosted
Lamp Watts: 7W
Lamp Life: 20,000 hrs.
Lamp Type: Standard LED
Lumens: 42
Beam Angle: 360°
Temperatures: 2.7K, 5.0K

ACCESSORIES (SOLD SEPARATELY)

Power Plug (ML2000-PP)

End Cap (ML2000-EC)

MOUNTING ACCESSORIES (SOLD SEPARATELY)

Mounting Plate (ML2000-MP)

Cable Lock (ML2000-CL-1/8")

Mounting Bracket Cable (ML2000-AC-1/8"-X) (X = Specify Length)

5 *market*LITE™ Series 800.921.CAL | CALIFORNIA ACCENT LIGHTING, INC.

PHOTOMETRIC LIGHTING TEMPLATE:

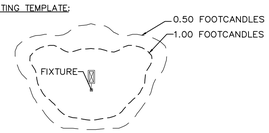

NOTE: THE PHOTOMETRIC TEMPLATE REPRESENTS LIGHT THROW FOR EACH INDIVIDUAL FIXTURE AND DOES NOT REPRESENT LIGHT COMING FROM OTHER SOURCES.

8 STRING LIGHT 'H' N.T.S

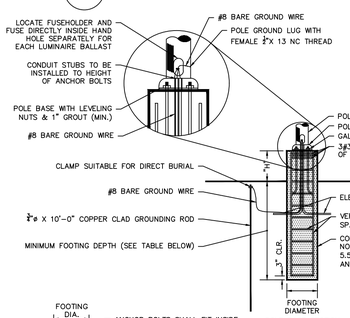

FIXTURE TYPE	MOUNTING HEIGHT	FOOTING DEPTH	FOOTING DIAMETER	EXPOSED HEIGHT "H"	VERTICAL REINFORCEMENT
A–C	25'	5'–6"	2'–0"	FLUSH	6#5 BARS

9 FIXTURE BASE N.T.S

NOTES:

EXPOSED HEIGHT OF POLE BASE (H) SHALL BE MEASURED ON THE UPHILL SIDE OF A SLOPE. FOOTING DEPTH (D) SHALL BE MEASURED ON THE DOWNHILL SIDE OF A SLOPE. AN ADDITIONAL VARIABLE HEIGHT (V) WILL BE BASED ON THE SLOPE ON WHICH THE POLE BASE IS LOCATED. CONTRACTOR TO CALCULATE FULL LENGTH OF EACH POLE BASE REQUIRED ON SLOPES (H+D+V = TOTAL BASE LENGTH)

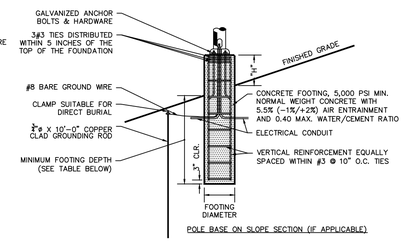

NOTES:

1. SHAFT CAP, ARMS, BASE FLANGE, ANCHOR BOLTS, LEVELING NUTS, CONNECTION HARDWARE, BOLT COVERS, HANDHOLE COVER, AND BOLT CIRCLE TEMPLATE SHALL BE FURNISHED BY POLE MANUFACTURER.
2. EACH STANDARD TO BE PROTECTED AGAINST LIGHTNING WITH AN INTERCONNECTED GROUND ROD. THIS ROD SHALL BE BONDED PER SECTION NUMBER 250–86, N.E.C.
3. CONCRETE WORK SHALL COMPLY WITH THE REQUIREMENT OF ACI 318. CAST–IN–PLACE SHALL HAVE UNCONFINED COMPRESSIVE STRENGTH OF AT LEAST 5,000 PSI AT 28–DAYS. DEFORMED REINFORCEMENT BARS SHALL CONFORM TO ASTM A615, GRADE 60.
4. CONTRACTOR TO ENSURE CONCRETE POLE BASES ARE POURED / PLACED ABSOLUTELY VERTICAL & LEVEL.
5. IF POLE BASE IS CAST–IN–PLACE, POLE BASE SHALL BE ONE CONTINUOUS POUR. EXPOSED PORTION OF BASE SHALL BE HAND–RUBBED SMOOTH.
6. CONTRACTOR TO COMPACT SUBGRADE AROUND POLE BASE PER EARTHWORK SPECIFICATIONS / GEOTECH REPORT.
7. THE INFORMATION ILLUSTRATED IN THE LIGHT POLE FOUNDATION DETAIL HAS BEEN PROVIDED FOR GENERAL REFERENCE AND PRELIMINARY COST ESTIMATE PURPOSES. LIGHT POLE FOUNDATIONS SHOULD BE DESIGNED AND DETAILED BY A LICENSED STRUCTURAL ENGINEER BASED ON EXISTING SOIL CONDITIONS, LOCAL DESIGN STANDARDS AND MANUFACTURERS RECOMMENDATIONS.
8. CONTRACTOR TO CONFIRM GROUNDING DESIGN WITH MEP.

SEE SHEET LL101 FOR LIGHTING SCHEDULE AND STATISTICS

FOR PERMITTING ONLY - NOT FOR CONSTRUCTION

Date	Description	No.
Revisions		

STATE OF CONNECTICUT MICHAEL SZURA
MICHAEL SZURA
LICENSED LANDSCAPE ARCHITECT
STATE LIC. No. 1339

LANGAN
Langan Engineering and Environmental Services, Inc.
555 Long Wharf Drive
New Haven, CT 06511
T: 203.562.5771 F: 203.789.6142 www.langan.com

Project
RESTAURANT DEVELOPMENT AT EVERGREEN WALK
MAP No. 27, BLOCK No. 15, UNIT No. 2
601 EVERGREEN WAY
SOUTH WINDSOR
HARTFORD COUNTY CONNECTICUT

Drawing Title
LIGHTING DETAILS

Project No. 140222801
Date 08/25/2021
Drawn By AC
Checked By JA
Drawing No. LL501
Sheet 0 of 1

© 2020 Langan

Project No. 140222801