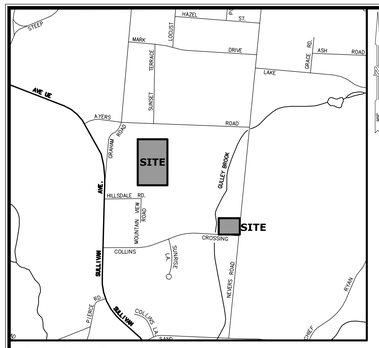

LOCATION MAP
SCALE: 1"=1000'

SOUTH WINDSOR HIGH SCHOOL SYNTHETIC TURF FIELD AND TENNIS COURT DEVELOPMENT

161 NEVERS ROAD
SOUTH WINDSOR, CONNECTICUT

DECEMBER 15, 2023
REVISED: JANUARY 22, 2024

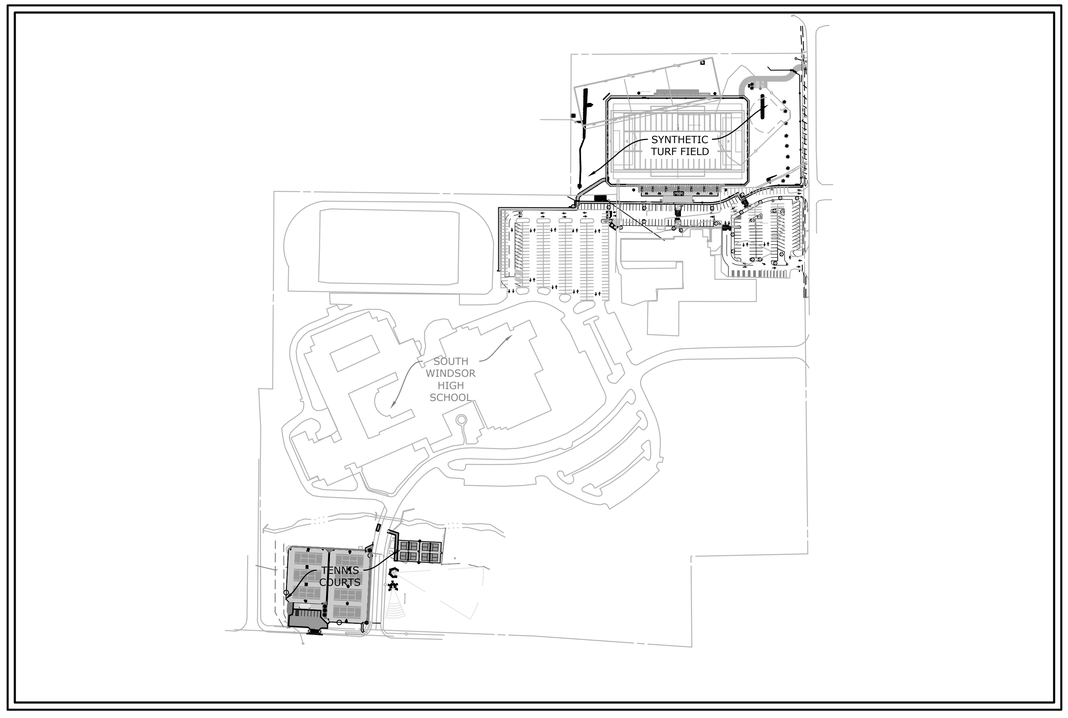

PROJECT VICINITY MAP:

MAP

0' 100' 200'
0 1/2" 1"
SCALE 1" =200'

NOTES

1. ALL INFORMATION SHOWN IS BASED ON TOPOGRAPHIC AND PLANIMETRIC SURVEY CONDUCTED BY DIMARZO & BERECZKY, INC. AND INFORMATION SHOWN BEYOND THE LIMITS OF THIS MAP IS BASED ON AVAILABLE MAPPING AND SHOULD BE CONSIDERED APPROXIMATE.
2. CONSTRUCTION SHALL CONFORM TO TOWN OF SOUTH WINDSOR REQUIREMENTS.
3. ALL FINAL LOCATIONS OF INSTALLED MATERIALS ARE TO BE FIELD VERIFIED.
4. EXISTING UTILITY INFORMATION IS BEEN BASED UPON AVAILABLE INFORMATION AND MAY BE INCOMPLETE. ALL UTILITIES SHOWN SHOULD BE CONSIDERED APPROXIMATE.
5. CALL "CALL BEFORE YOU DIG", SHALL BE NOTIFIED PRIOR TO CONSTRUCTION. ANY DISCREPANCIES BETWEEN PLAN INFORMATION AND MARKED UTILITIES SHALL BE DOCUMENTED AND BROUGHT TO THE ENGINEERS ATTENTION.
6. ALL DISTURBED AREAS SHALL BE RESTORED TO PRE–CONSTRUCTION CONDITIONS. SITE IS TO BE PHOTO DOCUMENTED BY CONTRACTOR AND OWNER PRIOR TO CONSTRUCTION.
7. ALL PROPOSED CONTOURS AND SPOT ELEVATIONS INDICATE FINISHED GRADE. FINISHED GRADE FOR SYNTHETIC TURF SHALL BE THE TOP OF THE INFILL.
8. THE PLANS REQUIRE A CONTRACTOR'S WORKING KNOWLEDGE OF LOCAL, MUNICIPAL, WATER AUTHORITY, AND STATE CODES.
9. ALL FUEL, OIL, PAINT, OR OTHER HAZARDOUS MATERIALS USED DURING CONSTRUCTION SHOULD BE STORED IN A SECONDARY CONTAINER AND/OR REMOVED TO A LOCKED ENCLOSED AREA WITH AN IMPERVIOUS FLOOR DURING NON–WORK HOURS.
10. THE CONTRACTOR SHALL MAINTAIN SEDIMENTATION CONTROLS AND REPAIR AS NECESSARY UNTIL ALL CONSTRUCTION IS COMPLETED AND ALL DISTURBED AREAS ARE PERMANENTLY STABILIZED.
11. ALL DIMENSIONS AND ELEVATIONS SHALL BE VERIFIED IN THE FIELD PRIOR TO CONSTRUCTION. ANY DISCREPANCIES SHALL BE BROUGHT TO THE ATTENTION OF THE ENGINEER.

CONSTRUCTION SEQUENCE

1. SITE CONTRACTOR TO STAKE OUT LIMIT OF DISTURBANCE AND VEGETATION TO BE RETAINED. NO DISTURBANCE IS TO TAKE PLACE BEYOND THE LIMITS OF WORK SHOWN.
2. CONTRACTOR TO INSTALL SEDIMENT AND EROSION CONTROLS ALONG THE PERIMETER, AND STABILIZED CONSTRUCTION ENTRANCES.
3. INSTALL INLET PROTECTION IN ALL ADJACENT STORM DRAINAGE STRUCTURES.
4. INITIATE MASS EARTHWORK OPERATIONS AFTER ALL STRAW WATTLES ARE INSTALLED. CLEAR AND GRUB SITE AND STOCKPILE TOPSOIL AND OTHER EARTHEN MATERIALS. TRANSPORT MATERIALS TO LOCATION SPECIFIED BY OWNER.
5. INSTALL PERIMETER STORM DRAINAGE COLLECTOR PIPE AND PERIMETER FENCING
6. GRADE FIELD SUBGRADE AND INSTALL GEOTEXTILE FABRIC AND UNDERDRAINAGE.
7. INSTALL DYNAMIC DRAINAGE STONE.
8. INSTALL SYNTHETIC TURF.
9. TOPSOIL AND SEED ANY DISTURBED AREAS.
   - 9.1. AREAS TO BE SEEDED UPON INSTALLATION OF TOPSOIL. ADDITIONAL SEEDING MAY BE REQUIRED BETWEEN MONTHS OF APRIL/MAY AND/OR SEPTEMBER.
   - 9.2. GRASS SEED BLEND OF 30% RYEGRASS, 30% KENTUCKY BLUEGRASS, 30% TALL FESCUE AT A RATE OF 10 LBS. OF SEED PER 1,000 S.F.
10. REMOVE EROSION CONTROLS ONCE SITE IS STABILIZED.

ZONING DATA TABLE

ZONE: A–20									
	LOT AREA	LOT FRONTAGE	LOT DEPTH	FRONT YARD	REAR YARD	SIDE YARD	STORIES	HEIGHT	LOT COVERAGE
REQUIRED	20,000 S.F.	100'	150'	40'	40'	10'	2 1/2	30'	20%
EXISTING	47.28 AC.	> 100'	> 150'	> 40'	> 40'	> 10'	NO CHANGE	NO CHANGE	10.6 %
PROPOSED	NO CHANGE	NO CHANGE	NO CHANGE	NO CHANGE	NO CHANGE	NO CHANGE	NO CHANGE	NO CHANGE	10.7 %

NAME	TITLE
	TITLE SHEET
EX	SITE PLAN - EXISTING CONDITIONS
SP 1-2	SITE DEVELOPMENT PLAN
D-1 - D-4	SITE DETAILS

PREPARED BY:

CEH Engineering & Consulting

CEH ENGINEERING AND CONSULTING
580 SHEPARD AVENUE
HAMDEN, CT 06514

GENERAL CONTRACTOR:

FieldTurf
A Tarkett Sports Company

903 N OPDYKE ROAD SUITE A1
AUBURN HILLS, MI 482326
248-977-4388

OWNER:

TOWN OF SOUTH WINDSOR
1540 SULLIVAN AVENUE
SOUTH WINDSOR, CONNECTICUT 06074

APPLICANT

SOUTH WINDSOR PUBLIC SCHOOLS
1737 MAIN STREET
SOUTH WINDSOR, CONNECTICUT 06074

811
Know what's below.
Call before you dig.
www.cbyd.com

EXISTING CONDITIONS LEGEND

PROPERTY LINE

TREE LINE

CHAIN LINK FENCE

EXISTING CONTOUR — 172

WATER LINE — W

GAS LINE — G

SEWER LINE — SAN

UTILITY POLE

TEST PIT — TP

EXISTING CONDITIONS NOTES

1. ALL INFORMATION SHOWN IS BASED ON AVAILABLE MAPPING AND SHOULD BE CONSIDERED APPROXIMATE.

REMOVALS LEGEND

REMOVE AND DISPOSE OF SITE FEATURE

ALTER EXISTING SITE FEATURE TO REMAIN

STRIP TOPSOIL TO REMAIN ONSITE

MILL EXISTING PAVEMENT AND STOCKPILE TO REUSE AS BASE MATERIAL ON SITE

NOTES:

ALL TOPSOIL TO BE REMAIN ON SITE.

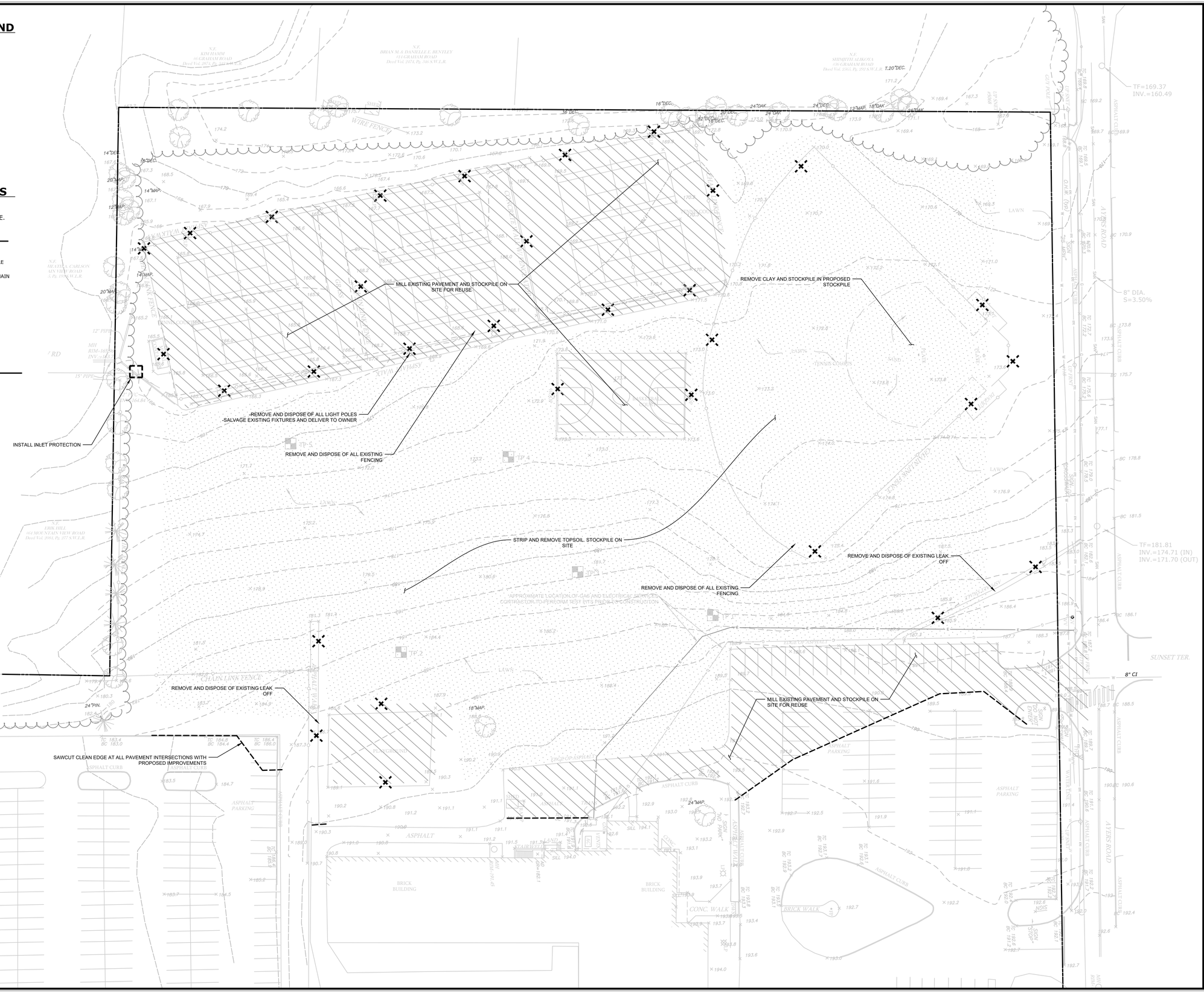

CEH ENGINEERING AND CONSULTING
580 SHEPARD AVENUE
HAMDEN, CT 06514

FieldTurf
A Tarkett Sports Company

DESCRIPTION	DATE	BY
IWWC SUBMISSION REVISIONS	12/28/2023	CEH
PZC SUBMISSION	1/22/2024	CEH

SITE PLAN - EXISTING CONDITIONS AND REMOVALS

PROPOSED SYNTHETIC TURF FIELD AND TENNIS COURT DEVELOPMENT
SOUTH WINDSOR HIGH SCHOOL

AYERS ROAD AND NEVERS ROAD
SOUTH WINDSOR, CONNECTICUT

CEH	JDH
DESIGNED	DRAWN

1"=30'
SCALE

DECEMBER 15, 2023
DATE

EX-1
SHEET

EXISTING CONDITIONS LEGEND

PROPERTY LINE

TREE LINE

CHAIN LINK FENCE

EXISTING CONTOUR — 172

WATER LINE — W

GAS LINE — G

SEWER LINE — SAN

UTILITY POLE

TEST PIT — TP

EXISTING CONDITIONS NOTES

1. ALL INFORMATION SHOWN IS BASED ON AVAILABLE MAPPING AND SHOULD BE CONSIDERED APPROXIMATE.

REMOVALS LEGEND

REMOVE AND DISPOSE OF SITE FEATURE

ALTER EXISTING SITE FEATURE TO REMAIN

STRIP TOPSOIL TO REMAIN ONSITE

MILL EXISTING PAVEMENT AND STOCKPILE TO REUSE AS BASE MATERIAL ON SITE

NOTES:

ALL TOPSOIL TO BE REMAIN ON SITE AND BE STOCKPILED AT TURF FIELD SITE.

SEE SITE PLANS FOR LOCATION OF STRAW WATTLE INSTALLATION

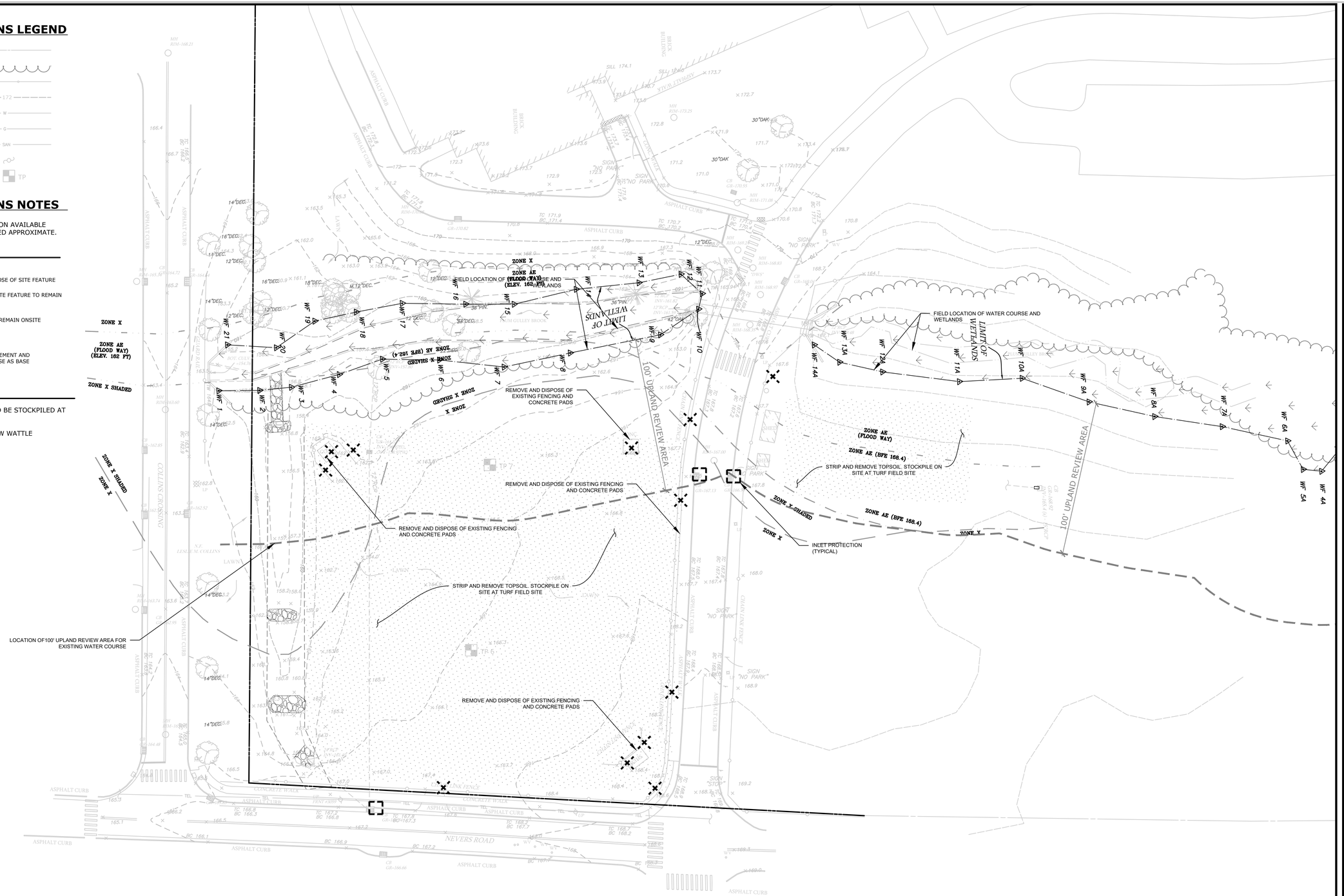

NOTES:

1. ALL INFORMATION SHOWN IS BASED ON AVAILABLE MAPPING AND SHOULD BE CONSIDERED APPROXIMATE.

CEH Engineering & Consulting

CEH ENGINEERING AND CONSULTING
580 SHEPARD AVENUE
HAMDEN, CT 06514

FieldTurf
A Tarkett Sports Company

DESCRIPTION	DATE	BY
IWWC SUBMISSION REVISIONS	12/28/2023	CEH
PZC SUBMISSION	1/22/2024	CEH

SITE PLAN - EXISTING CONDITIONS AND REMOVALS

PROPOSED SYNTHETIC TURF FIELD AND TENNIS COURT DEVELOPMENT
SOUTH WINDSOR HIGH SCHOOL

AYERS ROAD AND NEVERS ROAD
SOUTH WINDSOR, CONNECTICUT

CEH	JDH
DESIGNED	DRAWN

SCALE: 1"=30'

DATE: DECEMBER 15, 2023

SHEET: EX-2

SITE PLAN LEGEND

- CHAIN LINK FENCE
- STORM PIPE
- WALL
- PROPOSED CONTOUR
- SYNTHETIC TURF FIELD
- ASPHALT
- CONCRETE
- STONE PATHWAY
- PROPOSED TREES
- ATHLETIC FIELD LIGHT POLE
- PARKING LOT LIGHT POLE
- SPOT GRADE

PARKING COUNTS:

EXISTING PARKING ON SITE: 547 SPACES
PROPOSED PLAN CHANGES:
- REDUCTION OF 117 SPACES
- ADDITION OF 165 SPACES

TOTAL PARKING COUNT FOR PROPOSED CONDITIONS:
- 595 TOTAL SPACES ON SITE (NET ADDITION OF 48 SPACES)

SEDIMENT AND EROSION CONTROLS:

- ALL PROPOSED CATCH BASINS TO HAVE INLET PROTECTION INSTALLED
- STRAW WATTLES TO BE INSPECTED AFTER EACH STORM EVENT
  - -- ADDITIONAL 200 L.F. OF STRAW WATTLES TO BE MAINTAINED ON SITE FOR REPAIRS
- SWEEPER TO BE MAINTAINED ON SITE. SITE TO BE SWEPT AS NEEDED OR AS DIRECTED BY TOWN
- ACCESS TO WATER SYSTEM OR WATER TRUCK TO BE MAINTAINED THROUGH OUT PROJECT, UNTIL SOILS ARE STABILIZED.

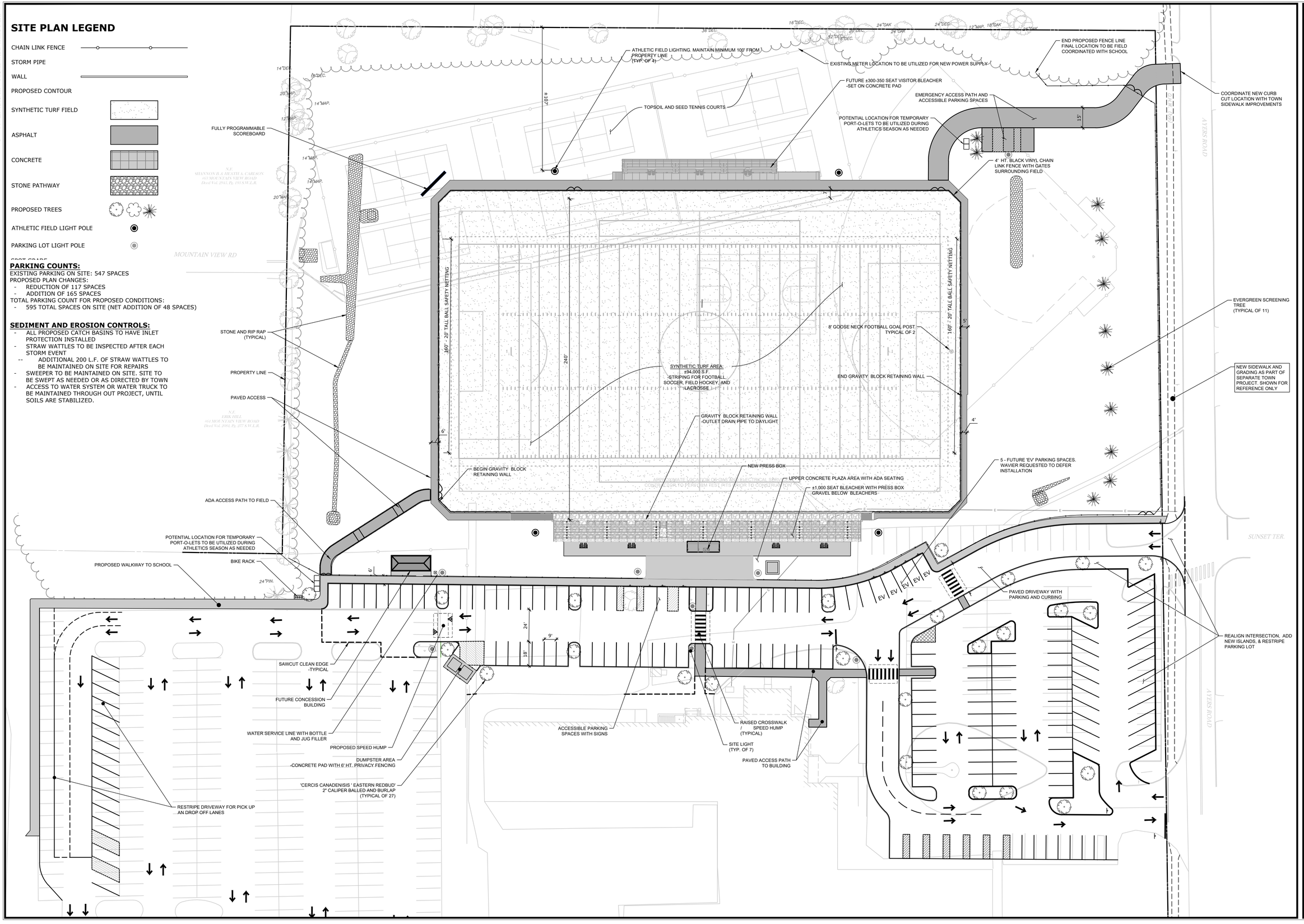

CEH ENGINEERING AND CONSULTING
580 SHEPARD AVENUE
HAMDEN, CT 06514

FieldTurf
A Tarkett Sports Company

DATE	BY
12/28/2023	CEH
1/22/2024	CEH

DESCRIPTION
IWWC SUBMISSION REVISIONS
PZC SUBMISSION

SITE PLAN - LAYOUT AND MATERIALS

PROPOSED SYNTHETIC TURF FIELD AND TENNIS COURT DEVELOPMENT
SOUTH WINDSOR HIGH SCHOOL

AYERS ROAD AND NEVERS ROAD
SOUTH WINDSOR, CONNECTICUT

CEH	JDH
DESIGNED	DRAWN

1"=30'
SCALE

DECEMBER 15, 2023
DATE

LA-1
SHEET

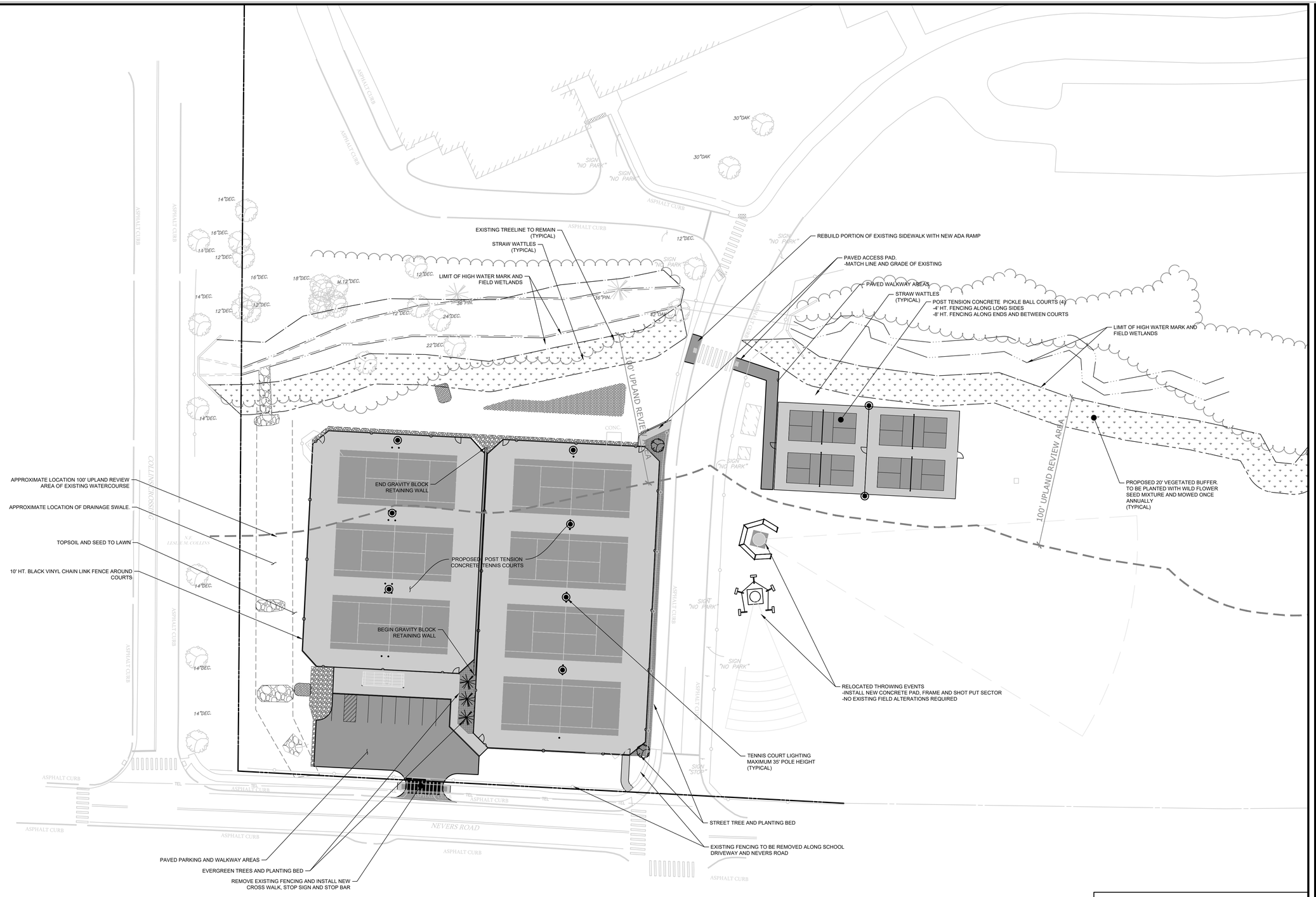

SEDIMENT AND EROSION CONTROLS:

- ALL PROPOSED CATCH BASINS TO HAVE INLET PROTECTION INSTALLED
- STRAW WATTLES TO BE INSPECTED AFTER EACH STORM EVENT
  - -- ADDITIONAL 200 L.F. OF STRAW WATTLES TO BE MAINTAINED ON SITE FOR REPAIRS
- SWEEPER TO BE MAINTAINED ON SITE. SITE TO BE SWEPT AS NEEDED OR AS DIRECTED BY TOWN
- ACCESS TO WATER SYSTEM OR WATER TRUCK TO BE MAINTAINED THROUGH OUT PROJECT, UNTIL SOILS ARE STABILIZED.

CEH Engineering & Consulting

CEH ENGINEERING AND CONSULTING
580 SHEPARD AVENUE
HAMDEN, CT 06514

FieldTurf
A Tarkett Sports Company

DESCRIPTION	DATE	BY
IWWC SUBMISSION REVISIONS	12/28/2023	CEH
PZC SUBMISSION	1/22/2024	CEH

SITE PLAN - LAYOUT AND MATERIALS

PROPOSED SYNTHETIC TURF FIELD AND TENNIS COURT DEVELOPMENT
SOUTH WINDSOR HIGH SCHOOL

AVERS ROAD AND NEVERS ROAD
SOUTH WINDSOR, CONNECTICUT

CEH	JDH
DESIGNED	DRAWN

SCALE: **1"=30'**

DATE: **DECEMBER 15, 2023**

SHEET: **LA-2**

SITE PLAN LEGEND

- CHAIN LINK FENCE
- STORM PIPE
- WALL
- PROPOSED CONTOUR
- SYNTHETIC TURF FIELD
- ASPHALT
- CONCRETE
- STONE PATHWAY
- PROPOSED TREES
- ATHLETIC FIELD LIGHT POLE
- PARKING LOT LIGHT POLE
- SPOT GRADE 175.00

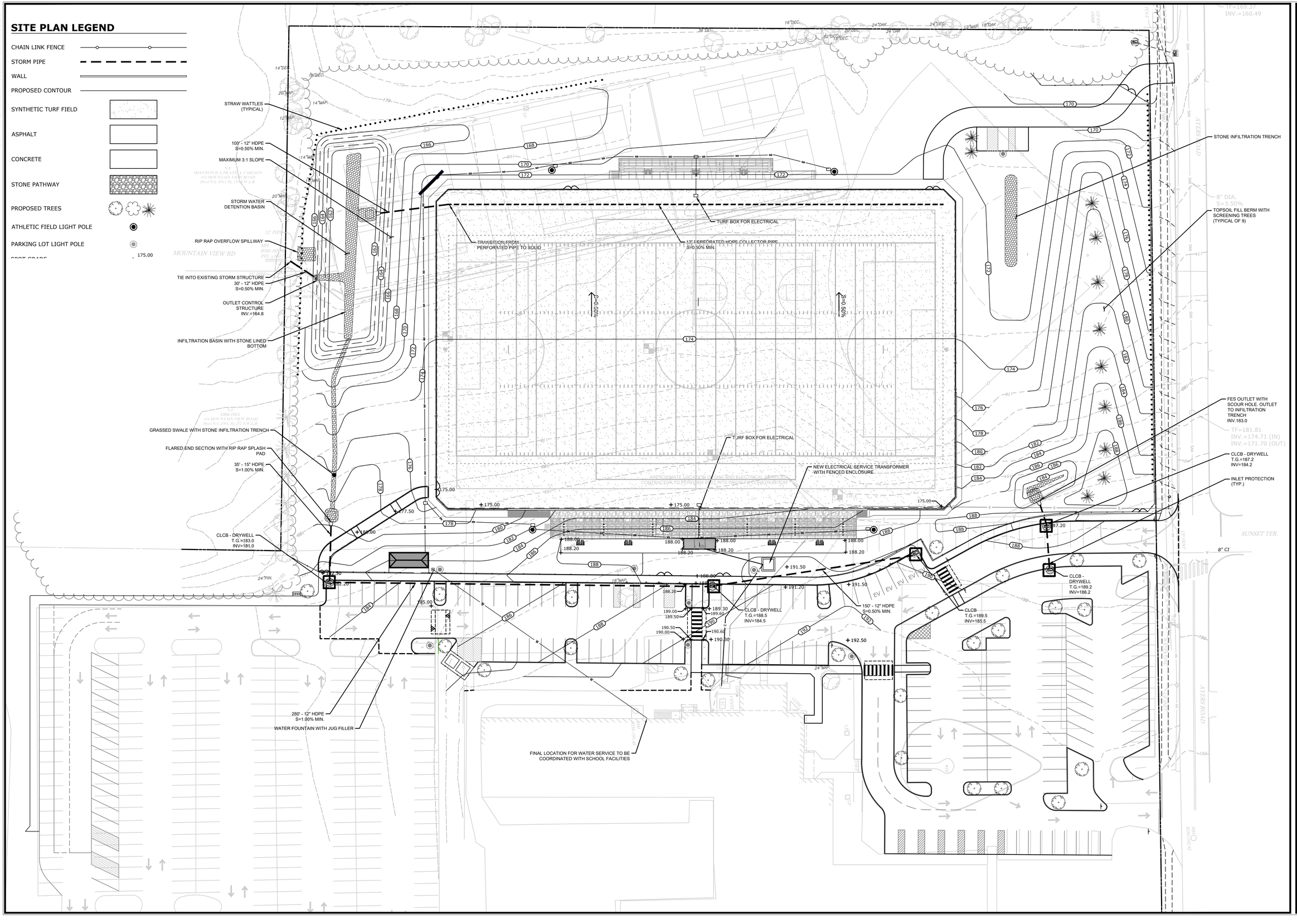

CEH ENGINEERING AND CONSULTING
580 SHEPARD AVENUE
HAMDEN, CT 06514

FieldTurf
A Tarkett Sports Company

DESCRIPTION	DATE	BY
IWWC SUBMISSION REVISIONS	12/28/2023	CEH
PZC SUBMISSION	1/22/2024	CEH

SITE PLAN - GRADING AND UTILITIES

PROPOSED SYNTHETIC TURF FIELD AND TENNIS COURT DEVELOPMENT
SOUTH WINDSOR HIGH SCHOOL

AYERS ROAD AND NEVERS ROAD
SOUTH WINDSOR, CONNECTICUT

CEH	JDH
DESIGNED	DRAWN

SCALE: 1"=30'

DATE: DECEMBER 15, 2023

SHEET: **GR-1**

CEH ENGINEERING
AND CONSULTING
580 SHEPARD AVENUE
HAMDEN, CT 06514

FieldTurf
A Tarkett Sports Company

DESCRIPTION	DATE	BY
IWWC SUBMISSION REVISIONS	12/28/2023	CEH
PZC SUBMISSION	1/22/2024	CEH

SITE PLAN - LAYOUT AND MATERIALS

PROPOSED SYNTHETIC TURF FIELD AND TENNIS COURT DEVELOPMENT
SOUTH WINDSOR HIGH SCHOOL

AVERS ROAD AND NEVERS ROAD
SOUTH WINDSOR, CONNECTICUT

CEH	JDH
DESIGNED	DRAWN

SCALE: 1"=30'

DATE: DECEMBER 15, 2023

SHEET: GR-2

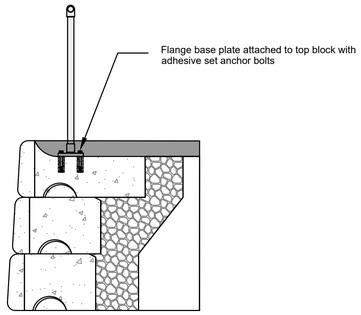

TYPICAL PLATE MOUNTED FENCE

NOT TO SCALE

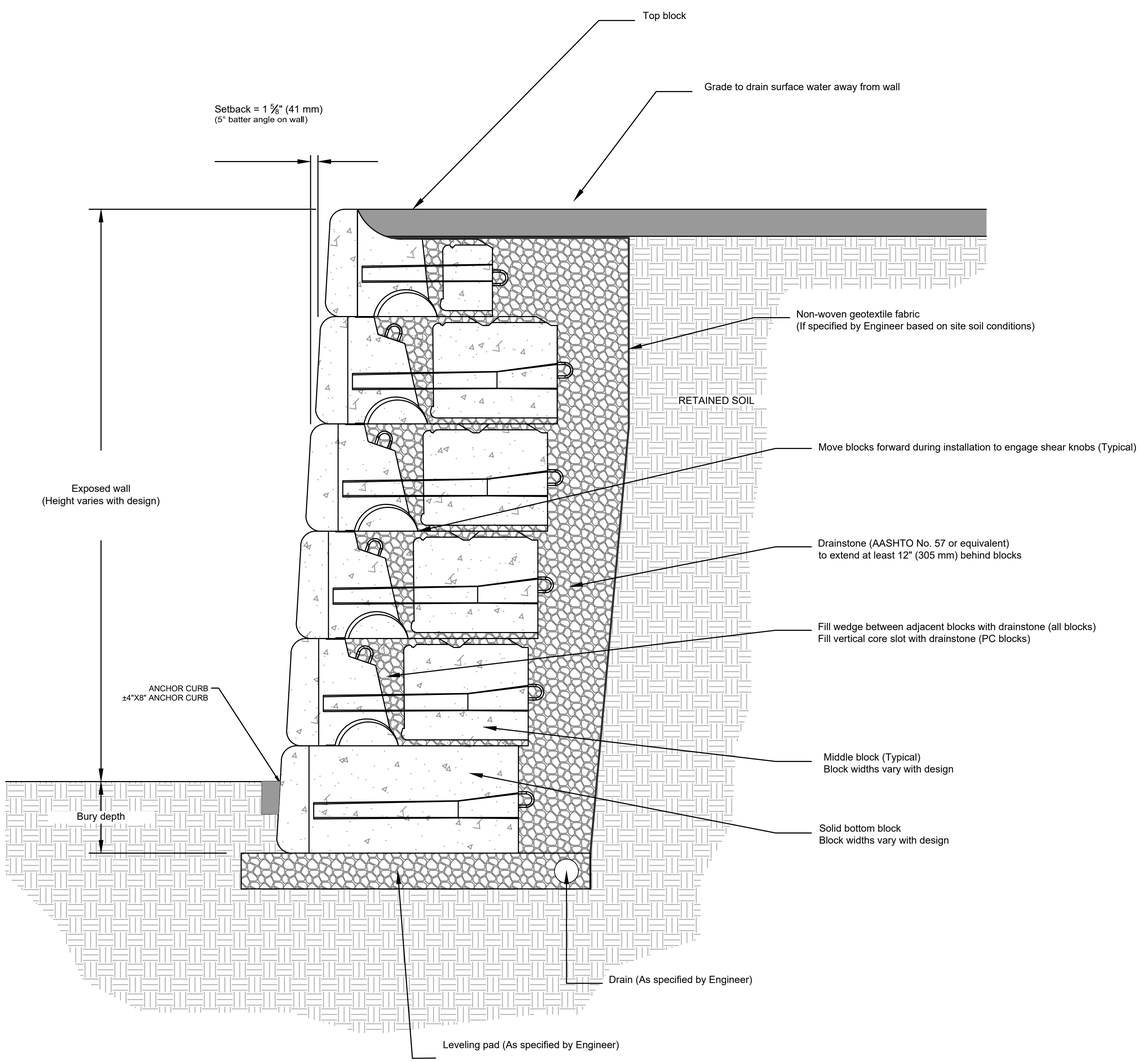

TYPICAL GRAVITY RETAINING WALL

NOT TO SCALE

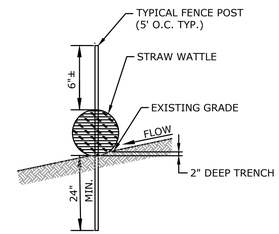

WATTLE ON BARE SOIL

N.T.S.

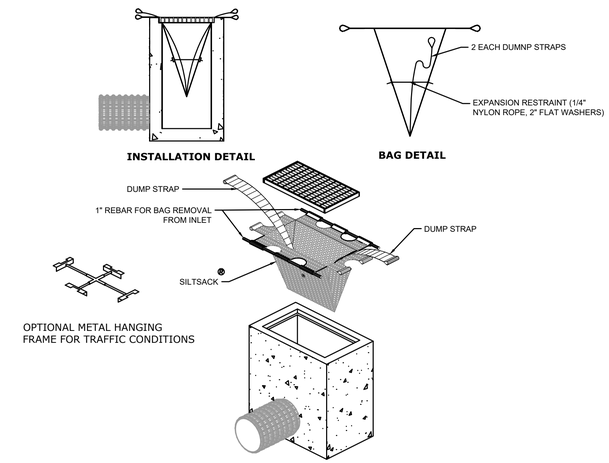

INLET PROTECTION

N.T.S.

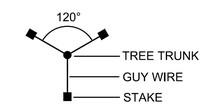

PLAN VIEW

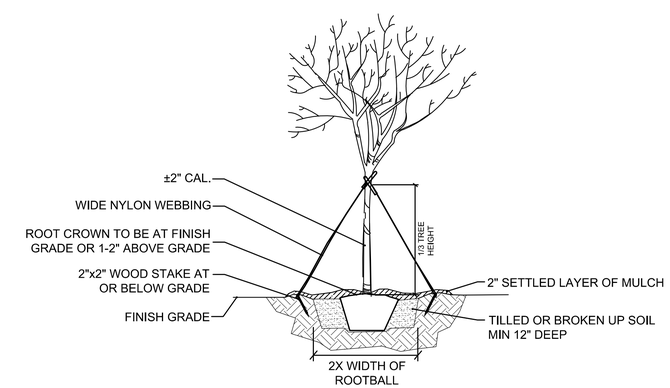

TREE PLANTING DETAIL

N.T.S.

CEH Engineering & Consulting

CEH ENGINEERING
AND CONSULTING
580 SHEPARD AVENUE
HAMDEN, CT 06514

FieldTurf
A Tarkett Sports Company

DESCRIPTION	DATE	BY
PZC SUBMISSION	1/22/2024	CEH

SITE DETAILS

PROPOSED SYNTHETIC TURF FIELD AND TENNIS COURT DEVELOPMENT
SOUTH WINDSOR HIGH SCHOOL

AYERS ROAD AND NEVERS ROAD
SOUTH WINDSOR, CONNECTICUT

CEH	JDH
DESIGNED	DRAWN

SCALE: NOT TO SCALE

DATE: DECEMBER 15, 2023

SHEET: D-1

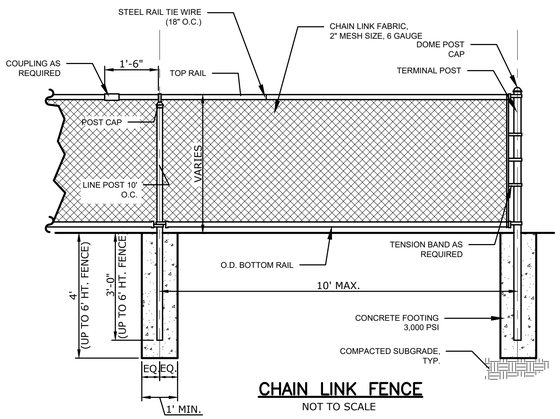

CHAIN LINK FENCE

NOT TO SCALE

CHAIN LINK FENCE POST AND RAIL SIZING	
POST OR RAIL TYPE	4' & 6' HT. FENCE
TERMINAL OR COMMON	2-7/8"
LINE POST	2-7/8"
TOP RAIL	1-5/8"
INTERMEDIATE RAIL	AS NOTED 1-5/8"
BOTTOM RAIL	1-5/8"
GATE POST	2-7/8"
GATE FRAME	1-7/8"

NOTE:

1. ALL CHAIN LINK POSTS, RAILS, FABRIC AND HARDWARE TO BE BLACK VINYL
2. 4' AND 6' HEIGHT FENCE POSTS MAY BE CORE DRILLED INTO CURBING.
3. ALL GATE POSTS TO HAVE FULL DEPTH FOUNDATIONS.
4. FENCE HEIGHTS ABOVE 6' ARE PROVIDED ON SEPARATE DETAIL

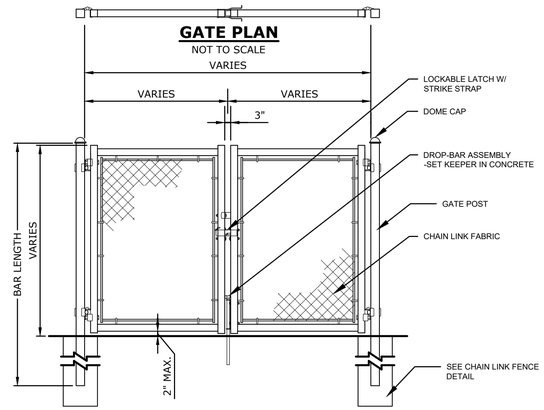

GATE PLAN

NOT TO SCALE

DOUBLE CHAIN LINK FENCE GATE

NOT TO SCALE

DOUBLE LEAF GATES		
OPENING	GATE POSTS	HINGE SPACE (S)
FACE TO FACE	SQ & RND SIZES	POST TO UPRIGHT
	2 7/8" 2.875" OD	FOR SQUARE & ROUND GATE POSTS: 2 7/8"

NOTES:

1. MATERIALS AND METHOD OF CONSTRUCTION SHALL CONFORM TO CHAIN LINK FENCE DETAIL ON THIS SHEET.
2. CONTRACTOR TO SUBMIT SHOP DRAWINGS FOR REVIEW AND APPROVAL

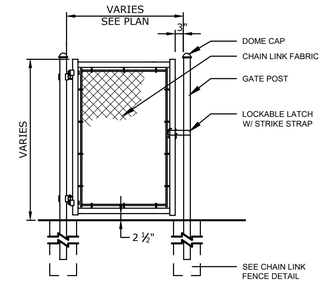

NOTES:

1. MATERIALS AND METHOD OF CONSTRUCTION SHALL CONFORM TO CHAIN LINK FENCE DETAIL ON THIS SHEET
2. CONTRACTOR TO SUBMIT SHOP DRAWINGS
3. GATE SWINGING DIRECTION:
   - 3.1. ALL SWING GATES ADJACENT TO SYNTHETIC TURF SHALL ONLY BE ALLOWED TO SWING AWAY FROM THE SYNTHETIC TURF WHERE POSSIBLE.
   - 3.2. PROVIDE STOP AS REQUIRED TO PREVENT SWINGING OF GATE TOWARDS THE SYNTHETIC SURFACE.

SINGLE CHAIN LINK FENCE GATE

NOT TO SCALE

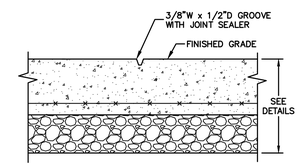

CONTROL JOINT

N.T.S.

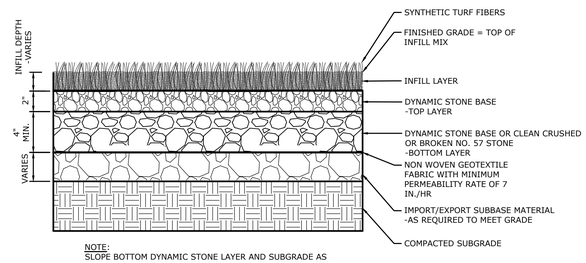

NOTE:
SLOPE BOTTOM DYNAMIC STONE LAYER AND SUBGRADE AS SHOWN ON THE GRADING PLAN TOWARDS COLLECTOR PIPES.

SYNTHETIC INFILL TURF

NOT TO SCALE

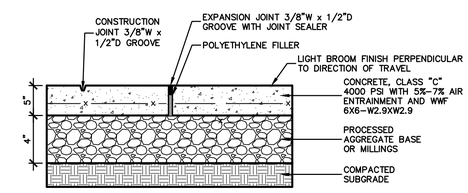

NOTES:

1. EXP. JOINTS 20' O.C. MAX. SCORE JOINTS EVERY 5' O.C..
2. CONCRETE SHALL BE SCREEDED, FLOATED, WITH STIFF BROOM FINISH, TOOLED JOINTS AND PITCHED TO GRADE. FINISH TO MATCH ADJACENT EXISTING CONDITIONS.
3. CROSS PITCH SHALL NOT EXCEED 2.0%.

CONCRETE SIDEWALK

N.T.S.

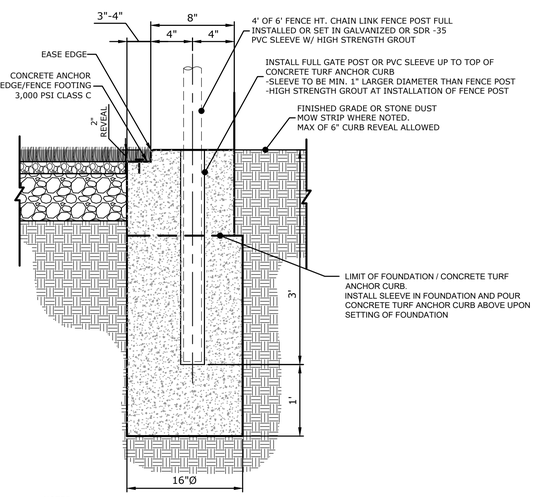

NOTES:
1. TOP OF CONCRETE TO HAVE STIFF BROOM FINISH PARALLEL TO CURB LINE
2. PROVIDE EXPANSION JOINTS IN CURB @ 20' MAXIMUM.
3. ANCHORING OF TURF PER FIELDTURF SPECIFICATIONS.

FLUSH CONCRETE TURF ANCHOR CURB AT FENCE GATE POST

NOT TO SCALE

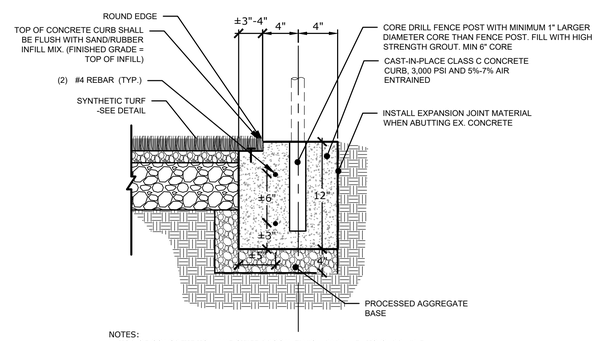

NOTES:
1. TOP OF CONCRETE TO HAVE STIFF BROOM FINISH PARALLEL TO CURB LINE
2. PROVIDE EXPANSION JOINTS IN CURB @ 20' MAXIMUM.
3. ANCHORING OF TURF PER FIELDTURF SPECIFICATIONS.

CONCRETE TURF ANCHOR CURB AT FENCE POST

NOT TO SCALE

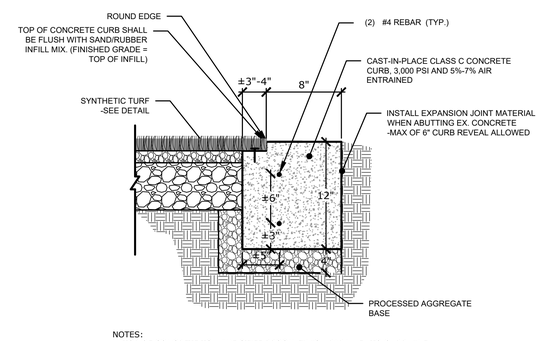

NOTES:
1. TOP OF CONCRETE TO HAVE STIFF BROOM FINISH PARALLEL TO CURB LINE
2. PROVIDE EXPANSION JOINTS IN CURB @ 20' MAXIMUM.
3. ANCHORING OF TURF PER FIELDTURF SPECIFICATIONS.

CONCRETE TURF ANCHOR CURB

NOT TO SCALE

CEH Engineering & Consulting
CEH ENGINEERING AND CONSULTING
580 SHEPARD AVENUE
HAMDEN, CT 06514

FieldTurf
A Tarkett Sports Company

DESCRIPTION	DATE	BY
PZC SUBMISSION	1/22/2024	CEH

SITE DETAILS

PROPOSED SYNTHETIC TURF FIELD AND TENNIS COURT DEVELOPMENT
SOUTH WINDSOR HIGH SCHOOL

AYERS ROAD AND NEVERS ROAD
SOUTH WINDSOR, CONNECTICUT

CEH	JDH
DESIGNED	DRAWN

NOT TO SCALE
SCALE

DECEMBER 15, 2023
DATE

D-2
SHEET

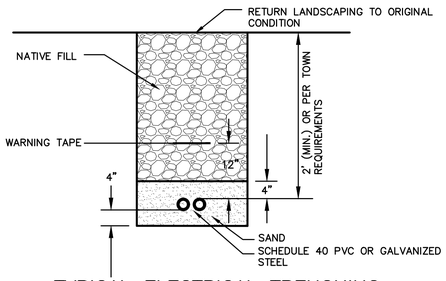

TYPICAL ELECTRICAL TRENCHING AND BACKFILL DETAIL

NOT TO SCALE

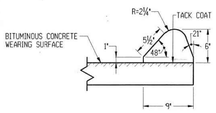

BITUMINOUS LIP CURBING

NOT TO SCALE

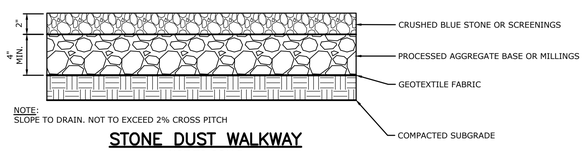

NOTE:
SLOPE TO DRAIN. NOT TO EXCEED 2% CROSS PITCH

STONE DUST WALKWAY

NOT TO SCALE

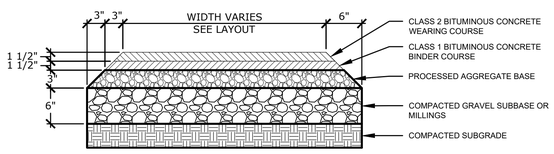

BITUMINOUS CONCRETE WALK

NOT TO SCALE

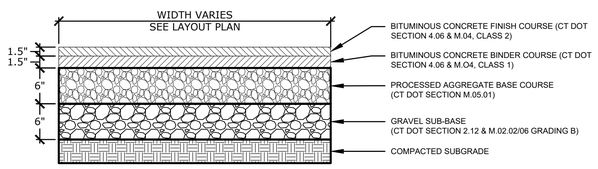

BITUMINOUS CONCRETE

NOT TO SCALE

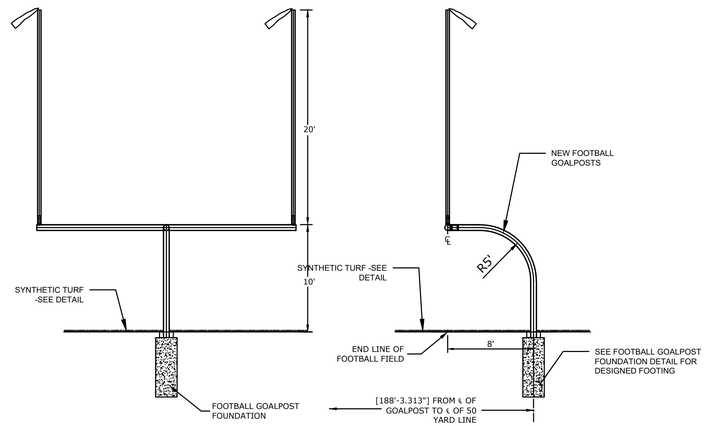

FOOTBALL GOAL POST

N.T.S.

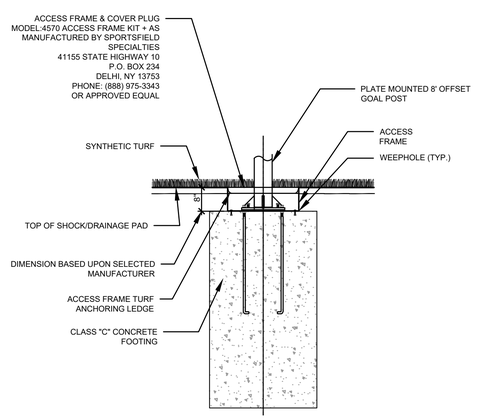

SIDE ELEVATION

FOOTBALL GOALPOST ACCESS FRAME

N.T.S.

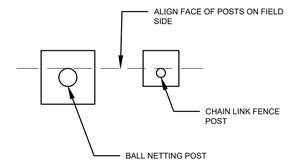

POST ALIGNMENT

N.T.S.

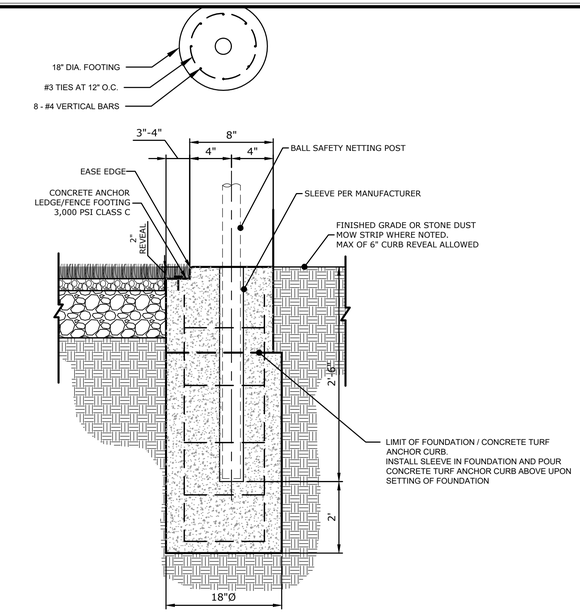

NOTES:
1. TOP OF CONCRETE TO HAVE STIFF BROOM FINISH PARALLEL TO CURB LINE
2. PROVIDE EXPANSION JOINTS IN CURB @ 20' MAXIMUM.
3. ANCHORING OF TURF PER FIELDTURF SPECIFICATIONS.

INTEGRAL BALL SAFETY NETTING FOUNDATION ABOVE FENCE

NOT TO SCALE

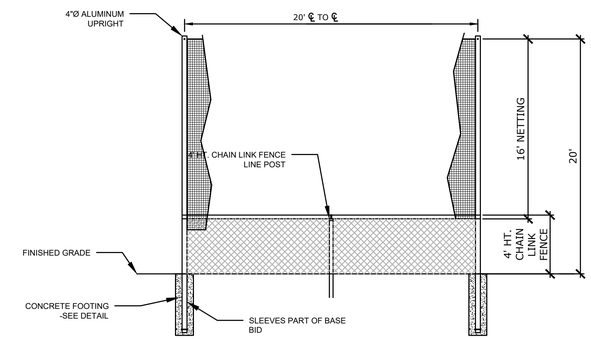

NOTES:
1. 20' HT. BALL SAFETY SYSTEM, MODEL: TFBSS420-SG-20' HT. WITH CUSTOM NET AS MANUFACTURED BY SPORTSFIELD SPECIALTIES, INC. NEW DELHI, NY TEL: 888-975-3343, OR APPROVED EQUAL.
2. NETTING SHALL OVERLAP CHAIN LINK FENCE IF SELECTED WITH A MINIMUM OF 1-FOOT AND SHALL BE SECURED TO THE FENCING FABRIC WITH QUICK CLIP SPRING HOOKS.
3. NETTING SHALL OVERLAP THE CHAIN LINK FENCE ON THE PLAYING FIELD SIDE OF THE FENCE FABRIC.

INTEGRAL BALL SAFETY NETTING - 20' HT.

N.T.S.

CEH Engineering & Consulting
CEH ENGINEERING AND CONSULTING
580 SHEPARD AVENUE
HAMDEN, CT 06514

FieldTurf
A Tarkett Sports Company

DATE	BY
1/22/2024	CEH

DESCRIPTION
PZC SUBMISSION

SITE DETAILS

PROPOSED SYNTHETIC TURF FIELD AND TENNIS COURT DEVELOPMENT
SOUTH WINDSOR HIGH SCHOOL

AYERS ROAD AND NEVERS ROAD
SOUTH WINDSOR, CONNECTICUT

CEH	JDH
DESIGNED	DRAWN

SCALE: NOT TO SCALE

DATE: DECEMBER 15, 2023

SHEET: D-3

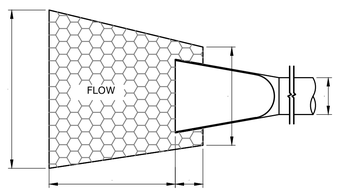

PLAN

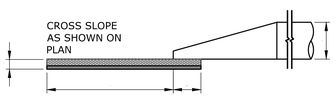

ELEVATION

OUTLET PROTECTION ID	TYPE	SP (FT)	RP (FT)	LA (FT)	W1 (FT)	W2 (FT)	D (IN)
FES ANALYSIS POINT C	TYPE B INTER-MEDIATE	1.25	1.25	10.0	4.0	7.0	12

FLARED END WITH RIP RAP SPLASH PAD

NOT TO SCALE

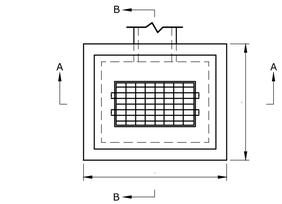

PLAN

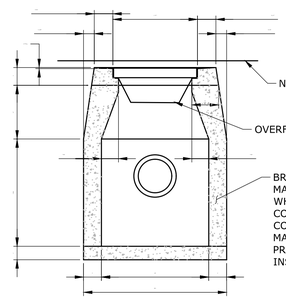

SECTION A-A

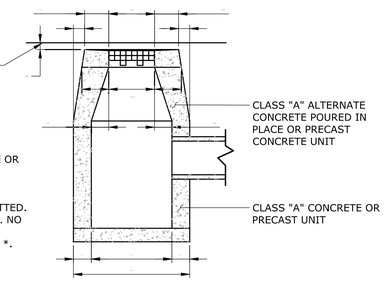

SECTION B-B

PREFORMED CONCRETE STRUCTURE OR APPROVED EQUAL

TYPICAL OUTLET CONTROL STRUCTURE

NOT TO SCALE

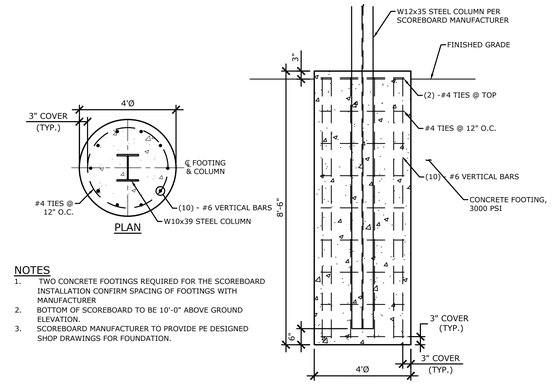

NOTES

1. TWO CONCRETE FOOTINGS REQUIRED FOR THE SCOREBOARD INSTALLATION CONFIRM SPACING OF FOOTINGS WITH MANUFACTURER
2. BOTTOM OF SCOREBOARD TO BE 10'-0" ABOVE GROUND ELEVATION.
3. SCOREBOARD MANUFACTURER TO PROVIDE PE DESIGNED SHOP DRAWINGS FOR FOUNDATION.

SCOREBOARD FOOTING DETAIL

NOT TO SCALE

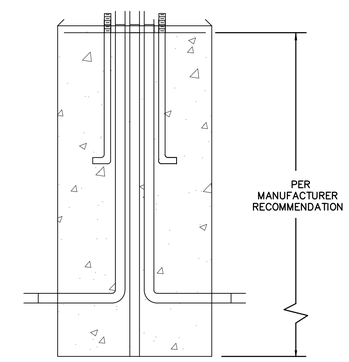

FRONT VIEW

DESIGN NOTES:

1 – CONCRETE 4000 PSI AT 28 DAYS.
2 – BASIS OF DESIGN: MUSCO LIGHTING PRECAST WITH REINFORCING AS SPECIFIED BY OEM.
3 – ANCHOR BOLTS AND GROUNDING AS SPECIFIED BY OEM.
4 – BALLAST POURED AROUND BASE IF REQUIRED.
5 – BOLT PROJECTION AS SPECIFIED BY POLE MANUFACTURER.
6 – 3/4" X 10' UL LISTED COPPER BONDED GROUND ROD.
7 – SEE PLAN FOR CONDUIT SIZES.
8 – EC TO COORDINATE CONDUIT ENTRANCE INTO THE FOUNDATION(S) PER SITE CONDITIONS/REQUIREMENTS.

TYPICAL ATHLETIC LIGHT POLE FOUNDATION DETAIL

NOT TO SCALE

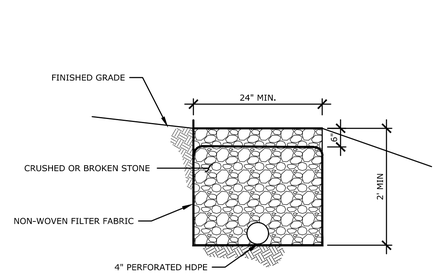

*SEE SITE PLAN FOR INVERTS, CONNECTIONS, AND CLEANOUT LOCATIONS

STONE TRENCH IN BASIN

NOT TO SCALE

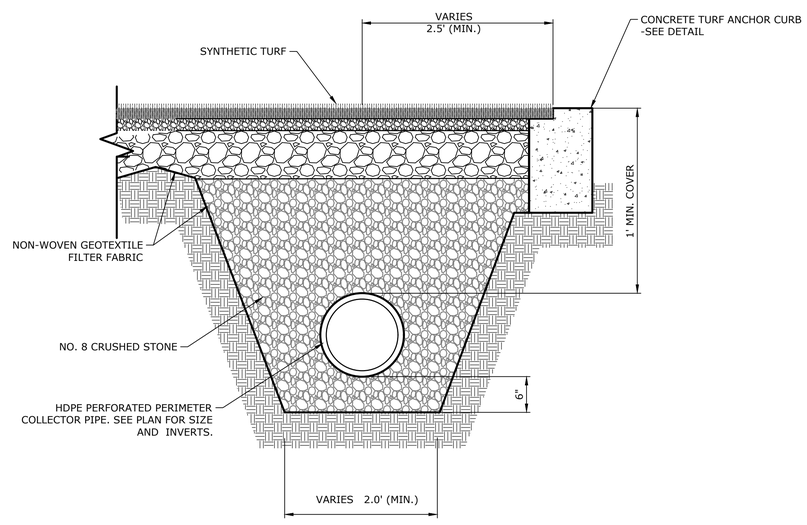

COLLECTOR PIPE SECTION

NOT TO SCALE

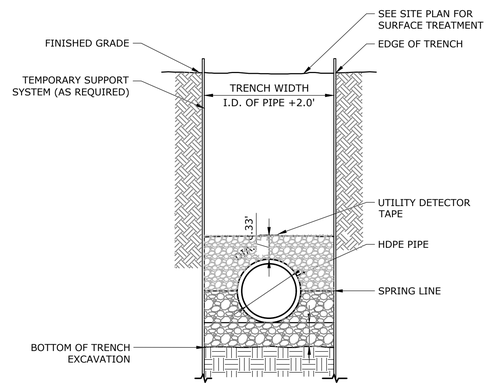

TYPICAL STORM DRAINAGE TRENCH

NOT TO SCALE

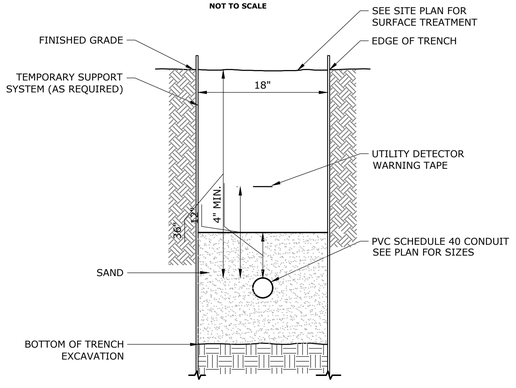

TYPICAL ELECTRICAL CONDUIT TRENCHING

NOT TO SCALE

CEH Engineering & Consulting
CEH ENGINEERING AND CONSULTING
580 SHEPARD AVENUE
HAMDEN, CT 06514

FieldTurf
A Tarkett Sports Company

DATE	BY	DESCRIPTION
1/22/2024	CEH	PZC SUBMISSION

SITE DETAILS

PROPOSED SYNTHETIC TURF FIELD AND TENNIS COURT DEVELOPMENT
SOUTH WINDSOR HIGH SCHOOL

AVERS ROAD AND NEVERS ROAD
SOUTH WINDSOR, CONNECTICUT

CEH	JDH
DESIGNED	DRAWN

SCALE: NOT TO SCALE

DATE: DECEMBER 15, 2023

SHEET: D-4

Drawing: P:\ESTIMATING\2023 BID ACTIVITY\CONNECTICUT\SOUTH WINDSOR CT\CAD\SW-SITEDETAILS.DWG Layout Tab:SD-5
Plotted by: T024735 On this date: Mon, 2024 February 5 - 12:04pm

Datasheet: TLC-LED-550 Luminaire and Driver

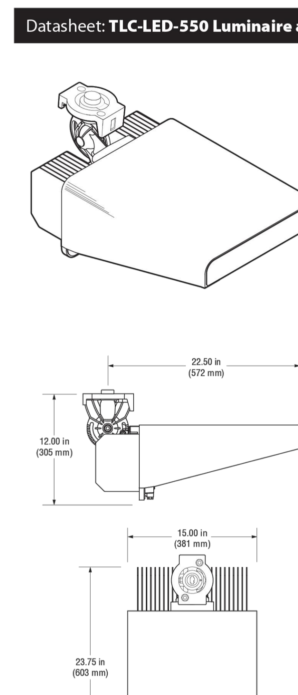

Luminaire Data

Weight (luminaire)	25 lb (11 kg)
UL listing number	E338094
UL listed for USA / Canada	UL1598 CSA-C22.2 No.250.0
CE Declaration	LVD, EMC, RoHS
Ingress protection, luminaire	(pending) IP65
Impact rating	IK07
Material and finish	Aluminum, powder-coat painted
Wind speed rating (aiming only)	150 mi/h (67 m/s)
UL, IEC ambient temperature rating, luminaire	(pending) 50°C (122°F)

Photometric Characteristics

Projected lumen maintenance per IES TM-21-11	
L90 (20k)	>120,000 h
L80 (20k)	>120,000 h
L70 (20k)	>120,000 h
Lumens[1]	67,000
CIE correlated color temperature	5700 K
Color rendering index (CRI)	75 typ, 70 min
LED binning tolerance	7-step MacAdam Ellipse

Footnotes:
1) Incorporates appropriate dirt depreciation factor for life of luminaire.

Datasheet: TLC-LED-550 Luminaire and Driver

Driver Data

Electrical Data

Rated wattage[1]	
Per driver	1080 W
Per luminaire	540 W
Number of luminaires per driver	2
Starting (inrush) current	<40 A, 256 µs
Fuse rating	15 A
UL, IEC ambient temperature rating, electrical components enclosure	(pending) 50°C (122°F)
Ingress protection, electrical components enclosure	IP54
Efficiency	95%
Dimming mode	optional
Range, energy consumption	15 - 100%
Range, light output	20 - 100%
Flicker	<2%
Total harmonic distortion (THD) at full output	<20%

Typical Wiring

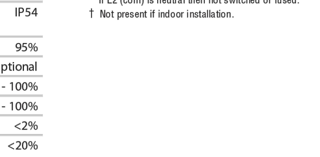

* If L2 (com) is neutral then not switched or fused.
† Not present if indoor installation.

	200 Vac 50/60 Hz	208 Vac 60 Hz	220 Vac 50/60 Hz	230 Vac 50 Hz	240 Vac 50/60 Hz	277 Vac 60 Hz	347 Vac 60 Hz	380 Vac 50/60 Hz	400 Vac 50 Hz	415 Vac 50 Hz	480 Vac 60 Hz
Max operating current per luminaire[2]	3.32 A	3.19 A	3.02 A	2.89 A	2.77 A	2.40 A	1.92 A	1.75 A	1.66 A	1.60 A	1.39 A

Footnotes:
1) Rated wattage is the power consumption, including driver efficiency losses, at stabilized operation in 25°C ambient temperature environment.
2) Operating current includes allowance for 0.90 minimum power factor, operating temperature, and LED light source manufacturing tolerances.

Notes
1. Use thermal magnetic HID-rated or D-curve circuit breakers.
2. See *Musco Control System Summary* for circuit information.

TENNIS COURT FIXTURE
TLC-LED-550
NOT TO SCALE

Datasheet: Light-Structure System™

Luminaire and Driver – TLC-LED-900

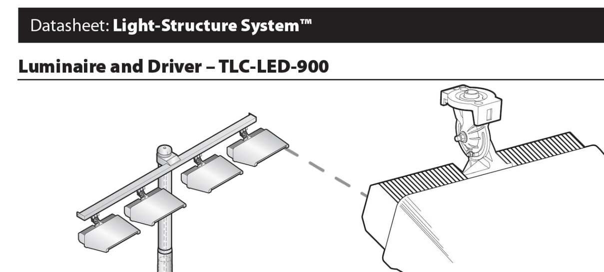

Luminaire Data

Weight (luminaire)	40 lb (18 kg)
UL listing number	E338094
UL listed for USA/Canada	UL1598 CSA-C22.2 No.250.0
CE Declaration	LVD, EMC, RoHS
Ingress protection (luminaire)	IP65
Impact rating	IK07
Material and finish	Aluminum, powder-coat painted
Wind speed rating (aiming only)	150 mi/h (67 m/s)
UL, IEC ambient temperature rating (luminaire)	50°C (122°F)

Photometric Characteristics

Projected lumen maintenance per IES TM-21-11	
L90 (20k)	>120,000 h
L80 (20k)	>120,000 h
L70 (20k)	>120,000 h
Lumens[1]	89,600
CIE correlated color temperature	5700 K
Color rendering index (CRI)	75 typ, 70 min
LED binning tolerance	7-step MacAdam Ellipse

Footnotes:
1) Incorporates appropriate dirt depreciation factor for life of luminaire.

All components from foundation to poletop are designed to work together in Light-Structure System™ to ensure reliable, trouble-free operation.

Datasheet: Light-Structure System™

Luminaire and Driver – TLC-LED-900

Driver Data

Electrical Data

Rated wattage[1]	
Per driver	890 W
Per luminaire	890 W
Number of luminaires per driver	1
Starting (inrush) current	<40 A, 256 µs
Fuse rating	15 A
UL, IEC ambient temperature rating, electrical components enclosure	50°C (122°F)
Ingress protection, electrical components enclosure	IP54
Efficiency	95%
Dimming mode	optional
Range, energy consumption	25 – 100%
Range, light output	30 – 100%
Flicker	<2%
Total harmonic distortion (THD) at full output	<20%

Typical Wiring

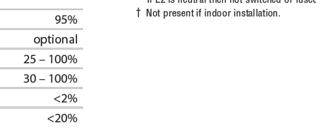

* If L2 is neutral then not switched or fused.
† Not present if indoor installation.

	200 Vac 50/60 Hz	208 Vac 60 Hz	220 Vac 50/60 Hz	230 Vac 50 Hz	240 Vac 50/60 Hz	277 Vac 60 Hz	347 Vac 60 Hz	380 Vac 50/60 Hz	400 Vac 50 Hz	415 Vac 50 Hz	480 Vac 60 Hz
Max operating current per luminaire[2]	5.50 A	5.29 A	5.00 A	4.78 A	4.58 A	3.97 A	3.17 A	2.90 A	2.75 A	2.65 A	2.29 A

Footnotes:
1) Rated wattage is the power consumption, including driver efficiency losses, at stabilized operation in 25°C ambient temperature environment.
2) Operating current includes allowance for 0.90 minimum power factor, operating temperature, and LED light source manufacturing tolerances.

Notes
1. Use thermal magnetic HID-rated or D-curve circuit breakers.
2. See *Musco Control System Summary* for circuit information.

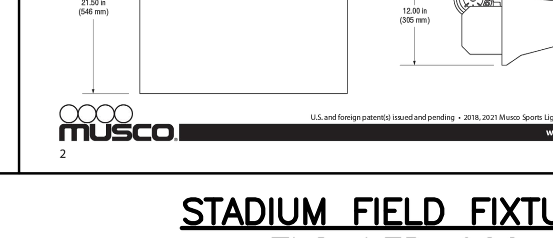

STADIUM FIELD FIXTURE
TLC-LED-900
NOT TO SCALE

Datasheet: Light-Structure System™

Luminaire and Driver – TLC-LED-1200

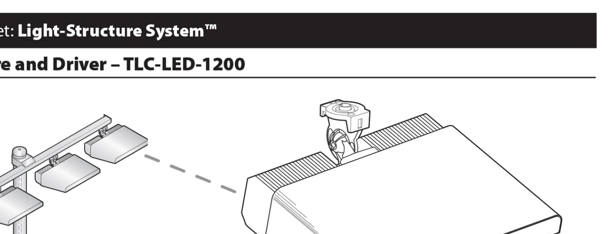

Luminaire Data

Weight (luminaire)	45 lb (20 kg)
UL listing number	E338094
UL listed for USA/Canada	UL1598 CSA-C22.2 No.250.0
CE Declaration	LVD, EMC, RoHS
Ingress protection (luminaire)	IP65
Impact rating	IK07
Material and finish	Aluminum, powder-coat painted
Wind speed rating (aiming only)	150 mi/h (67 m/s)
UL, IEC ambient temperature rating (luminaire)	50°C (122°F) (pending)

Photometric Characteristics

Projected lumen maintenance per IES TM-21-11	
L90 (20k)	>120,000 h
L80 (20k)	>120,000 h
L70 (20k)	>120,000 h
Lumens[1]	150,000
CIE correlated color temperature	5700 K
Color rendering index (CRI)	75 typ, 70 min
LED binning tolerance	5-step MacAdam Ellipse

Footnotes:
1) Incorporates appropriate dirt depreciation factor for life of luminaire.

All components from foundation to poletop are designed to work together in Light-Structure System™ to ensure reliable, trouble-free operation.

Datasheet: Light-Structure System™

Luminaire and Driver – TLC-LED-1200

Driver Data

Electrical Data

Rated wattage[1]	
Per driver	1170 W
Per luminaire	1170 W
Number of luminaires per driver	1
Starting (inrush) current	<40 A, 256 µs
Fuse rating	15 A
UL, IEC ambient temperature rating (electrical components enclosure)	50°C (122°F) (pending)
Ingress protection (electrical components enclosure)	IP54
Efficiency	95%
Dimming mode	optional
Range, energy consumption	13 – 100%
Range, light output	18 – 100%
Flicker	<2%
Total harmonic distortion (THD) at full output	<20%

Typical Wiring

* If L2 is neutral then not switched or fused.
† Not present if indoor installation.

	200 Vac 50/60 Hz	208 Vac 60 Hz	220 Vac 50/60 Hz	230 Vac 50 Hz	240 Vac 50/60 Hz	277 Vac 60 Hz	347 Vac 60 Hz	380 Vac 50/60 Hz	400 Vac 50 Hz	415 Vac 50 Hz	480 Vac 60 Hz
Max operating current per luminaire[2]	7.20 A	6.92 A	6.54 A	6.26 A	6.00 A	5.20 A	4.15 A	3.79 A	3.60 A	3.47 A	3.00 A

Footnotes:
1) Rated wattage is the power consumption, including driver efficiency losses, at stabilized operation in 25°C ambient temperature environment.
2) Operating current includes allowance for 0.90 minimum power factor, operating temperature, and LED light source manufacturing tolerances.

Notes
1. Use thermal magnetic HID-rated or D-curve circuit breakers.
2. See *Musco Control System Summary* for circuit information.

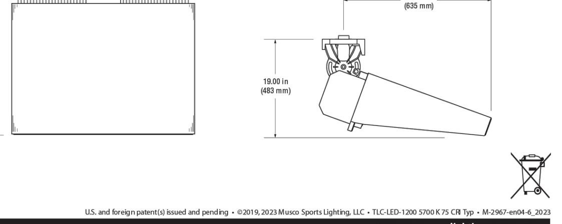

STADIUM FIELD FIXTURE
TLC-LED-1200
NOT TO SCALE

Datasheet: TLC-LED-1500 Luminaire and Driver

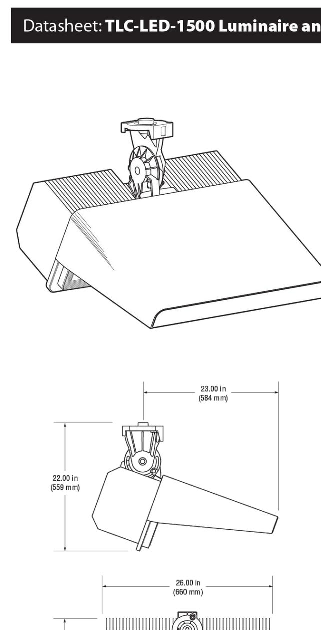

Luminaire Data

Weight (luminaire)	67 lb (30 kg)
UL listing number	E338094
UL listed for USA / Canada	UL1598 CSA-C22.2 No.250.0
CE Declaration	LVD, EMC, RoHS
Ingress protection, luminaire	IP65
Impact rating	IK07
Material and finish	Aluminum, powder-coat painted
Wind speed rating (aiming only)	150 mi/h (67 m/s)
UL, IEC ambient temperature rating, luminaire	50°C (122°F)

Photometric Characteristics

Projected lumen maintenance per IES TM-21-11	
L90 (20k)	>120,000 h
L80 (20k)	>120,000 h
L70 (20k)	>120,000 h
Lumens[1]	160,000
CIE correlated color temperature	5700 K
Color rendering index (CRI)	75 typ, 70 min
LED binning tolerance	7-step MacAdam Ellipse

Footnotes:
1) Incorporates appropriate dirt depreciation factor for life of luminaire.

Datasheet: TLC-LED-1500 Luminaire and Driver

Driver Data

Electrical Data

Rated wattage[1]	
Per driver	1430 W
Per luminaire	1430 W
Number of luminaires per driver	1
Starting (inrush) current	<40 A, 256 µs
Fuse rating	15 A
UL, IEC ambient temperature rating, electrical components enclosure	50°C (122°F)
Ingress protection, electrical components enclosure	IP54
Efficiency	95%
Dimming mode	optional
Range, energy consumption	12 – 100%
Range, light output	17 – 100%
Flicker	<2%
Total harmonic distortion (THD) at full output	<20%

Typical Wiring

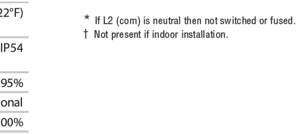

* If L2 (com) is neutral then not switched or fused.
† Not present if indoor installation.

	200 Vac 50/60 Hz	208 Vac 60 Hz	220 Vac 50/60 Hz	230 Vac 50 Hz	240 Vac 50/60 Hz	277 Vac 60 Hz	347 Vac 60 Hz	380 Vac 50/60 Hz	400 Vac 50 Hz	415 Vac 50 Hz	480 Vac 60 Hz
Max operating current per luminaire[2]	8.86 A	8.52 A	8.06 A	7.71 A	7.39 A	6.40 A	5.11 A	4.67 A	4.43 A	4.27 A	3.70 A

Footnotes:
1) Rated wattage is the power consumption, including driver efficiency losses, at stabilized operation in 25°C ambient temperature environment.
2) Operating current includes allowance for 0.90 minimum power factor, operating temperature, and LED light source manufacturing tolerances.

Notes
1. Use thermal magnetic HID-rated or D-curve circuit breakers.
2. See *Musco Control System Summary* for circuit information.

STADIUM FIELD FIXTURE
TLC-LED-1500
NOT TO SCALE

Datasheet: Light-Structure System™

Luminaire and Driver – TLC-BT-575

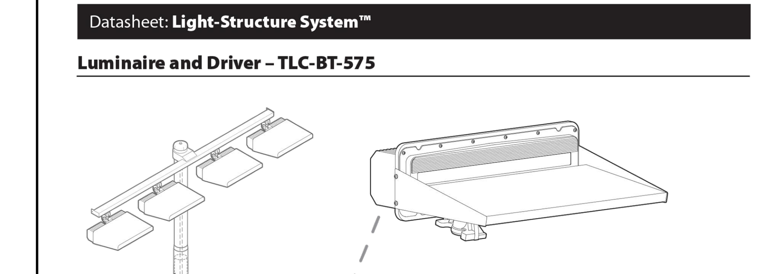

Luminaire Data

Weight (luminaire)	34 lb (15 kg)
UL listing number	E338094
UL listed for USA/Canada	UL1598 CSA-C22.2 No.250.0
CE Declaration	LVD, EMC, RoHS
Ingress protection (luminaire)	IP65
Impact rating	IK07
Material and finish	Aluminum, powder-coat painted
Wind speed rating (aiming only)	150 mi/h (67 m/s)
UL, IEC ambient temperature rating (luminaire)	50°C (122°F)

Photometric Characteristics

Projected lumen maintenance per IES TM-21-11	
L90 (20k)	>120,000 h
L80 (20k)	>120,000 h
L70 (20k)	>120,000 h
Lumens[1]	52,000
CIE correlated color temperature	5700 K
Color rendering index (CRI)	75 typ, 70 min
LED binning tolerance	7-step MacAdam Ellipse

Footnotes:
1) Incorporates appropriate dirt depreciation factor for life of luminaire.

All components from foundation to poletop are designed to work together in Light-Structure System™ to ensure reliable, trouble-free operation.

Datasheet: Light-Structure System™

Luminaire and Driver – TLC-BT-575

Driver Data

Electrical Data

Rated wattage[1]	
Per driver	575 W
Per luminaire	575 W
Number of luminaires per driver	1
Starting (inrush) current	<40 A, 256 µs
Fuse rating	15 A
UL, IEC ambient temperature rating, electrical components enclosure	50°C (122°F)
Ingress protection, electrical components enclosure	IP54
Efficiency	95%
Total harmonic distortion (THD) at full output	<20%

Typical Wiring

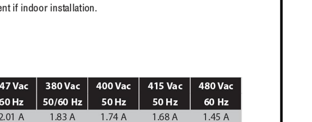

* If L2 is neutral then not switched or fused.
† Not present if indoor installation.

	200 Vac 50/60 Hz	208 Vac 60 Hz	220 Vac 50/60 Hz	230 Vac 50 Hz	240 Vac 50/60 Hz	277 Vac 60 Hz	347 Vac 60 Hz	380 Vac 50/60 Hz	400 Vac 50 Hz	415 Vac 50 Hz	480 Vac 60 Hz
Max operating current per luminaire[2]	3.48 A	3.35 A	3.16 A	3.03 A	2.90 A	2.51 A	2.01 A	1.83 A	1.74 A	1.68 A	1.45 A

Footnotes:
1) Rated wattage is the power consumption, including driver efficiency losses, at stabilized operation in 25°C ambient temperature environment.
2) Operating current includes allowance for 0.90 minimum power factor, operating temperature, and LED light source manufacturing tolerances.

Notes
1. Use thermal magnetic HID-rated or D-curve circuit breakers.
2. See *Musco Control System Summary* for circuit information.

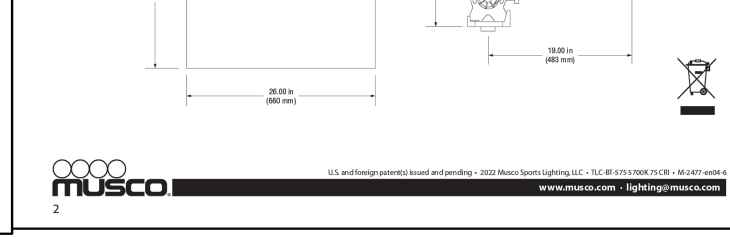

STADIUM FIELD FIXTURE (UPLIGHTING)
TLC-BT-575
NOT TO SCALE

RATIO LED SERIES
AREA/SITE LIGHTER

Cat.# | Job | Type | Approvals

HUBBELL Outdoor Lighting

SPECIFICATIONS

Intended Use:
Low profile LED area/site luminaire with a variety of IES distributions for lighting applications such as retail, commercial and campus parking lots.

Construction:
- Rectilinear form mimics the traditional shoebox form factor keeping a similar but updated style and appearance, ideal for retrofit applications.
- Diecast housing with hidden vertical heat fins that are optimal for heat dissipation while keeping a clean smooth outer surface
- Corrosion resistant, die-cast aluminum housing with powder coat paint finish

Optics/LED:
- 80, 160, 320 or 480 midpower LEDs
- Entire optical aperture illuminates to create a larger luminous surface area resulting in a low glare appearance without sacrificing optical performance
- 3000K, 4000K, or 5000K (70 CRI) CCT
- Zero uplight at 0 degrees of tilt

Electrical:
- Universal 120-277 VAC or 347-480 VAC input voltage, 50/60 Hz
- Ambient operating temperature -40°C to 40°C
- Drivers have greater than 90% power factor and less than 20% THD
- LED drivers have output power over-voltage, over-current protection and short circuit protection with auto recovery
- Field replaceable surge protection device provides 20KA protection meeting ANSI/IEEE C62.41.2 Category C High and Surge Location Category C3; Automatically takes fixture off-line for protection when device is consumed

Controls:
- Photo control, occupancy sensor and wireless available for complete on/off and dimming control
- 7-pin ANSI C136.41-2013 photocontrol receptacle option available for twist lock photocontrols or wireless control modules (control accessories sold separately)
- 0-10V dimming leads available for use with control devices (provided by others, must specify lead length)
- SiteSync™ wireless control system is available via 7-pin and can be ordered separately. See ordering information and details at: www.hubbelllighting.com/sitesync

Installation:
- Standard square arm mounts
- Optional universal mounting block and round pole adapter also available as accessories
- Knuckle arm fitter option available for 2-3/8" OD tenon. Max tilt of 60 degrees with 4 degree adjustable increments. (restrictions apply for 7-pin options)

Warranty:
Five year limited warranty (for more information visit: http://www.hubbelloutdoor.com/resources/warranty/

Listings:
- Listed to UL1598 and CSA C22.2#250.0-24 for wet locations and 40°C ambient temperatures
- 3G rated for ANSI C136.31 high vibration applications
- Fixture is IP66 rated
- Meets IDA recommendations using 3K CCT configuration at 0 degrees of tilt

CERTIFICATIONS/LISTINGS
cULus IP66

PRODUCT IMAGE(S)

DIMENSIONS

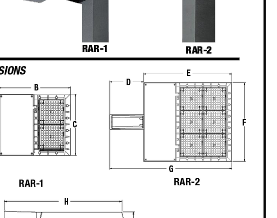

A	B	C	D	E	F
5.0" 127mm	14.0" 355.6mm	12.0" 304.8mm	7.5" 190.5mm	19.5" 495.3mm	17.39" 441.7mm

G	H	I
27.0" 685.8mm	18.2" 462.8mm	3.25" 82.5mm

Weight	
RAR-1	13.5 lbs (6.12 kgs)
RAR-2	24.0 lbs (10.8 kgs)

SHIPPING INFORMATION

Catalog Number	G.W.(kg)/CTN	Carton Dimensions Length Inch (cm)	Width Inch (cm)	Height Inch (cm)
RAR-1	15 (6.8)	20.75 (52.7)	15.125 (38.4)	6.9375 (17.6)
RAR-2	19 (8.6)	25 (63.5)	15.125 (38.4)	6.9375 (17.6)

ORDERING INFORMATION - STOCK CONFIGURATIONS

CATALOG DESCRIPTION	MOUNTING	DISTRIBUTION	WATTAGE	VOLTAGE	CCT	LUMENS	WEIGHT LBS. (KG)	Finish
RAR-1-160L-100-4K7-3-UNV-ASQ-DB	Arm	Type III	100W	120-277V	4000K	12,000	14 (6)	Bronze
RAR-1-160L-100-4K7-4-UNV-ASQ-DB	Arm	Type IV	100W	120-277V	4000K	12,000	14 (6)	Bronze
RAR-2-320L-140-4K7-3-UNV-ASQ-DB	Arm	Type III	140W	120-277V	4000K	18,000	24 (11)	Bronze
RAR-2-320L-140-4K7-4-UNV-ASQ-DB	Arm	Type IV	140W	120-277V	4000K	18,000	24 (11)	Bronze
RAR-2-320L-165-4K7-3-UNV-ASQ-DB	Arm	Type III	165W	120-277V	4000K	21,000	24 (11)	Bronze
RAR-2-320L-165-4K7-4-UNV-ASQ-DB	Arm	Type IV	165W	120-277V	4000K	21,000	24 (11)	Bronze

CONFIGURABLE ORDERING INFORMATION NEXT PAGE

ORDERING INFORMATION
ORDERING EXAMPLE: RFL2-80L-3K7-FR-UNV-ASQ-BL-NXWE-BC

SERIES
- RAR1 Ratio Area Size 1
- RAR2 Ratio Area Size 2

 # LEDS WATTAGE
- 80L-25 80 LEDs - 25w
- 80L-50 80 LEDs - 50w
- 160L-70 160 LEDs - 70w
- 160L-100 160 LEDs - 100w
- 320L-110 320 LEDs - 110w
- 320L-140 320 LEDs - 140w
- 320L-165 320 LEDs - 165w
- 480L-185 480 LEDs - 185w
- 480L-210 480 LEDs - 210w
- 480L-240 480 LEDs - 240w

CCT/CRI
- 3K7 3000K, 70 CRI
- 4K7 4000K, 70 CRI
- 5K7 5000K, 70 CRI

OPTICS ROTATION
- Blank for no rotation
- L Optic rotation left
- R Optic rotation right

DISTRIBUTION
- 2 IES TYPE II
- 3 IES TYPE III
- 4 IES TYPE IV
- 5 TYPE V

VOLTAGE
- UNV Universal 120-277V
- 347 347V
- 480 480V

COLOR
- BL Black textured
- DB Dark bronze textured
- GT Graphite textured
- GYS Light gray smooth
- PS Platinum silver smooth
- WH White textured
- CC Custom Color

MOUNTING
- ASQ Arm mount for square pole/flat surface
- ASQU Universal Arm mount for square pole/flat surface

MOUNTING ROUND POLES
- A_[1] Arm mount for round pole
- A_U[1] Universal arm mount for round point

MOUNTING OTHER
- WB Wall Bracket
- MAF Mast Arm Fitter for 2-3/8" OD horizontal arm
- K Knuckle

CONTROL OPTIONS NETWORK
- NXWE NX Wireless Enabled (module + radio)
- NXSPW_F[3] NX Wireless, PIR Occ. Sensor, Day-light Harvesting
- NXSP_F[3] NX, PIR Occ. Sensor, Daylight Harvesting

CONTROL OPTIONS OTHER
- SCP-_F[2] Programmable occupancy sensor
- 7PR 7-Pin twist lock receptacle
- 7PR-SC 7-Pin receptacle with shorting cap
- 7PR-MD_F[3] Low voltage sensor for 7PR
- 7PR-TL 7-Pin PCR with photocontrol

OPTIONS
- BC Backlight Control
- SF Single Fuse
- DF Double Fuse
- TB Terminal Block
- 2PF 2 power feed with 2 drivers

1 Replace "__" with "3" for 3.5"-4.13" OD pole, "4" for 4.18"-5.25" OD pole, "5" for 5.5"-6.5" OD pole
2 Replace "__" with "14" for up to 14' mounting height, "30F" for 15-30' mounting height
3 Replace "__" with "8" for up to 8' mounting height, "40F" for 9-40' mounting height

STOCK - ACCESSORIES/REPLACEMENT PARTS - Order Separately

Catalog Number	Description
RARRPA3DB	Round pole adapter 3.5" TO 4.13"
RARA3UDB	Universal mount for square pole or round pole 3.5" to 4.13"
RARBC80L	Ratio blacklight control 80L
RARBC160L	Ratio blacklight control 160L
RARBC320L	Ratio blacklight control 320L
RARBC480L	Ratio blacklight control 320L

CONTROLS ACCESSORIES - Order Separately

Catalog Number	Description
SW7PR	SiteSync™ on fixture module via 7PR
SWUSB	SiteSync™ Software on USB
SWTAB	SiteSync™ Windows Tablet
SWBRG	SiteSync™ Wireless Bridge Node
SWFC	SiteSync™ Field Commission Serv
SCPREMOTE	Order at least one per project location to program and control
WIR-RME-L	wiSCAPE™ external control node; use with 7PR
NXOFM-1R1D-UNV	NX external control node; use with 7PR

ACCESSORIES/REPLACEMENT PARTS - Order Separately

Catalog Number	Description
RAR-ASQU-XX	Universal arm mount for square pole/flat surface
RAR-A_U-XX	Universal arm mount for round poles
RAR-RPA_-XX	Round pole adapter
TPLBARA3	Twin Parallel Luminaire Bracket
SETA2	4" square pole top tenon adapter, 2 3/8" OD slipfitter
RETA2	4" round pole top tenon adapter; 2 3/8" OD slipfitter for max. Four fixtures (90o); order 4" round pole adapters separately
TETA2	Three-sided pole top tenon adapter, 2 3/8" OD slipfitter
SPIKE	Bird Deterent
RARWB-XX	Wall Bracket - use with Mast Arm Fitter or Knuckle

1 Replace "_" with "3" for 3.5"-4.13" OD pole, "4" for 4.18"-5.25" OD pole, "5" for 5.5"-6.5" OD pole

MOUNTING

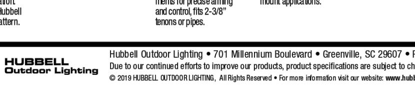

Arm Mount – Fixture ships with integral arm for ease of installation. Compatible with Hubbell Outdoor #2 drill pattern.
MAF – Fits 2-3/8" OD arms Roadway applications.
Knuckle – Knuckle mount 15° aiming angle increments for precise aiming and control, fits 2-3/8" tenons or pipes.
Wall Mount – Wall mount bracket designed for building mount applications.

PARKING LOT FIXTURE
NOT TO SCALE

CEH Engineering & Consulting
CEH ENGINEERING AND CONSULTING
580 SHEPARD AVENUE
HAMDEN, CT 06514

FieldTurf
A Tarkett Sports Company

DESCRIPTION	DATE	BY
PZC SUBMISSION	1/22/2024	CEH

SITE DETAILS

PROPOSED SYNTHETIC TURF FIELD AND TENNIS COURT DEVELOPMENT
SOUTH WINDSOR HIGH SCHOOL

AYERS ROAD AND NEVERS ROAD
SOUTH WINDSOR, CONNECTICUT

DESIGNED	DRAWN
CEH	JDH

SCALE: NOT TO SCALE

DATE: DECEMBER 15, 2023

SHEET: D-5