TAMARACK AVENUE

LAND USE PERMITTING PLANS

EVERGREEN WALK · SOUTH WINDSOR · CONNECTICUT

EVERGREEN WALK, LLC

JANUARY 7, 2021

PREPARED FOR

EVERGREEN WALK, LLC
SOUTH WINDSOR
100 EVERGREEN WAY,
SOUTH WINDSOR, CT 06074

PREPARED BY

FUSS & O'NEILL
146 HARTFORD ROAD
MANCHESTER, CONNECTICUT 06040
860.646.2469
www.fando.com

SHEET INDEX

SHEET No.	SHEET TITLE
GI-001	COVER SHEET
GI-002	GENERAL NOTES
GI-003	AREA PLAN
CP-101	SITE PREPARATION PLAN
CE-101	EROSION & SEDIMENT CONTROL PLAN
CS-101	SITE PLAN
CG-101	GRADING AND DRAINAGE PLAN
LP-101	LANDSCAPE PLAN
CL-101	SITE LIGHTING PLAN
CW-101	WETLANDS ALTERATION PLAN
CD-501	EROSION & SEDIMENT CONTROL DETAILS
CD-502-503	SITE DETAILS
CD-504	STORMWATER MANAGEMENT DETAILS
CD-505	UTILITIES & LANDSCAPE DETAILS

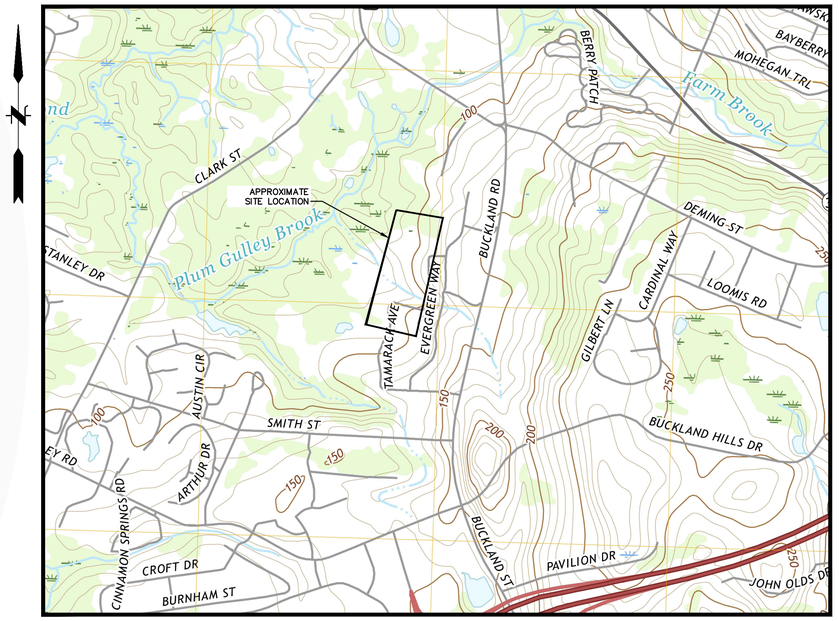

LOCATION MAP
SCALE: 1" = 1000'

PROJ. No.: 2000481.Y21	
DATE: JANUARY 2021	

GI-001

File Path: J:\DWG\P2000481\Y21\CivilPlan\Tamarack Ave\2000481Y21_COV.dwg, Layout: GI-001, Plotted: Monday, January 04, 2021, User: jdeninger Plotter: AUTOCAD PDF (GENERAL DOCUMENTATION).PC3 CTB File: FO.STB

CIVIL GENERAL NOTES

GENERAL

1. SYMBOLS AND LEGENDS OF PROJECT FEATURES ARE GRAPHIC REPRESENTATIONS AND ARE NOT NECESSARILY SHOWN ON THE DRAWINGS TO SCALE OR TO THEIR ACTUAL DIMENSION OR LOCATION. COORDINATE DETAIL SHEET DIMENSIONS, MANUFACTURERS' LITERATURE, SHOP DRAWINGS AND FIELD MEASUREMENTS OF SUPPLIED PRODUCTS FOR LAYOUT OF THE PROJECT FEATURES.
2. DO NOT RELY SOLELY ON ELECTRONIC VERSIONS OF DRAWINGS, SPECIFICATIONS, AND DATA FILES THAT ARE PROVIDED BY THE ENGINEER. FIELD VERIFY LOCATION OF PROJECT FEATURES.
3. PERFORM NECESSARY CONSTRUCTION NOTIFICATIONS, APPLY FOR AND OBTAIN NECESSARY PERMITS, PAY FEES, AND POST BONDS ASSOCIATED WITH THE WORK AS REQUIRED BY THE CONTRACT DOCUMENTS.
4. BASE PLAN: THE PROPERTY LINES SHOWN WERE DETERMINED BY AN ACTUAL FIELD SURVEY CONDUCTED BY FUSS & O'NEILL, AND FROM PLANS OF RECORD. THE TOPOGRAPHY AND PHYSICAL FEATURES ARE BASED ON A COMPILATION OF ACTUAL FIELD SURVEY PERFORMED ON THE GROUND BY FUSS & O'NEILL AND PLANS OF RECORD.
6. TOPOGRAPHIC ELEVATIONS ARE BASED ON NGVD 29 DATUM.
7. WETLANDS WERE DELINEATED BY FUSS & O'NEILL.

WORK RESTRICTIONS

1. DO NOT CLOSE OR OBSTRUCT ROADWAYS, SIDEWALKS, FIRE HYDRANTS, AND UTILITIES WITHOUT APPROPRIATE PERMITS.
2. WORK IS RESTRICTED TO THE HOURS OF TO THE HOURS 7AM TO 5PM ON MONDAY THROUGH SATURDAY.

REGULATORY REQUIREMENTS

1. WITHIN LOCAL RIGHTS-OF-WAY, PERFORM THE WORK IN ACCORDANCE WITH LOCAL MUNICIPAL STANDARDS.
2. WITHIN STATE RIGHTS-OF-WAY, PERFORM THE WORK IN ACCORDANCE WITH THE LATEST EDITION OF THE DEPARTMENT OF TRANSPORTATION'S STANDARD SPECIFICATIONS AND ISSUED REVISIONS/SUPPLEMENTS.
3. PROVIDE TRAFFIC SIGNAGE AND PAVEMENT MARKINGS IN CONFORMANCE WITH THE LATEST EDITION OF THE MANUAL OF UNIFORM TRAFFIC CONTROL DEVICES.
4. BE RESPONSIBLE FOR SITE SECURITY AND JOB SAFETY. PERFORM CONSTRUCTION ACTIVITIES IN ACCORDANCE WITH OSHA STANDARDS AND LOCAL REQUIREMENTS.
5. DISPOSE OF DEMOLITION DEBRIS IN ACCORDANCE WITH APPLICABLE FEDERAL, STATE AND LOCAL REGULATIONS, ORDINANCES AND STATUTES.
6. THIS PROJECT DISTURBS MORE THAN ONE ACRE OF LAND AND FALLS WITHIN THE CONNECTICUT DEEP STORMWATER AND DEWATERING WASTEWATER CONSTRUCTION ACTIVITIES GENERAL PERMIT PROCESS. A COPY OF THIS GENERAL PERMIT SHALL BE KEPT ON SITE AT ALL TIMES.

EROSION AND SEDIMENT CONTROL

1. INSTALL EROSION CONTROL MEASURES PRIOR TO STARTING ANY WORK ON THE SITE. REFER TO THE EROSION AND SEDIMENT CONTROL DRAWINGS.
2. IMPLEMENT ALL NECESSARY MEASURES REQUIRED TO CONTROL STORMWATER RUNOFF, DUST, SEDIMENT, AND DEBRIS FROM EXITING THE SITE. PERFORM CORRECTIVE ACTION AS NEEDED FOR EROSION CLEANUP AND REPAIRS TO OFF SITE AREAS, IF ANY, AT NO COST TO OWNER.
3. INSPECT AND MAINTAIN EROSION CONTROL MEASURES PER THE SCHEDULE IN THE EROSION AND SEDIMENT CONTROL DRAWINGS. DISPOSE OF SEDIMENT IN AN UPLAND AREA. DO NOT ENCUMBER OTHER DRAINAGE STRUCTURES AND PROTECTED AREAS.
4. PERFORM CONSTRUCTION SEQUENCING IN SUCH A MANNER TO CONTROL EROSION AND TO MINIMIZE THE TIME THAT EARTH MATERIALS ARE EXPOSED BEFORE THEY ARE COVERED, SEEDED, OR OTHERWISE STABILIZED.
5. UPON COMPLETION OF CONSTRUCTION AND ESTABLISHMENT OF PERMANENT GROUND COVER, REMOVE AND DISPOSE OF TEMPORARY EROSION CONTROL MEASURES. CLEAN SEDIMENT AND DEBRIS FROM TEMPORARY MEASURES AND FROM PERMANENT STORM DRAIN AND SANITARY SEWER SYSTEMS.

DEMOLITION

1. THE DEMOLITION PLAN IS PROVIDED FOR INFORMATION ONLY AND MAY NOT INDICATE ALL ITEMS REQUIRED TO BE DEMOLISHED. PERFORM A PRE-BID SITE INSPECTION. COORDINATE DEMOLITION OF UNIDENTIFIED UTILITIES OR STRUCTURES WITH OWNER. DEMOLISH STRUCTURES, SITE IMPROVEMENTS, UTILITIES, ETC. AS REQUIRED TO CONSTRUCT PROPOSED TO CONSTRUCT PROPOSED FACILITY AND UTILITY SERVICES.

CONSTRUCTION LAYOUT

1. PROVIDE PROPER TRANSITIONS BETWEEN EXISTING AND PROPOSED SITE IMPROVEMENTS. FIELD VERIFY EXISTING PAVEMENT AND GROUND ELEVATIONS AT THE INTERFACE WITH PROPOSED PAVEMENTS AND DRAINAGE STRUCTURES BEFORE START OF CONSTRUCTION.
2. PRIOR TO ORDERING MATERIALS AND BEGINNING CONSTRUCTION, FIELD VERIFY PROPOSED UTILITY ROUTES AND IDENTIFY ANY INTERFERENCES OR OBSTRUCTIONS WITH EXISTING UTILITIES OR PUBLIC RIGHTS-OF-WAY.
3. IMMEDIATELY INFORM THE ENGINEER IN WRITING IF EXISTING UTILITY CONDITIONS CONFLICT OR DIFFER FROM THAT INDICATED AND IF THE WORK CANNOT BE COMPLETED AS INDICATED.
4. DIMENSIONS ARE FROM FACE OF CURB, FACE OF BUILDING, FACE OF WALL, AND CENTER LINE OF PAVEMENT MARKINGS, UNLESS NOTED OTHERWISE.
5. BOUNDS OR MONUMENTATION DISTURBED DURING CONSTRUCTION SHALL BE SET OR RESET BY A PROFESSIONAL LICENSED SURVEYOR.

EARTHWORK

1. NOTIFY UTILITY LOCATOR SERVICE AT LEAST 72 HOURS BEFORE STARTING EXCAVATION. "CALL BEFORE YOU DIG" AT 1-800-922-4455.
2. STOP WORK IN THE VICINITY OF SUSPECTED CONTAMINATED SOIL, GROUNDWATER OR OTHER MEDIA. IMMEDIATELY NOTIFY THE OWNER SO THAT APPROPRIATE TESTING AND SUBSEQUENT ACTION CAN BE TAKEN. RESUME WORK IN THE IMMEDIATE VICINITY ONLY UPON DIRECTION BY THE OWNER.

UTILITIES

1. TERMINATE EXISTING UTILITIES IN CONFORMANCE WITH LOCAL, STATE AND INDIVIDUAL UTILITY COMPANY STANDARD SPECIFICATIONS AND DETAILS. COORDINATE UTILITY SERVICE DISCONNECTS WITH UTILITY REPRESENTATIVES.
2. THE TYPE, SIZE AND LOCATION OF DEPICTED UNDERGROUND UTILITIES ARE APPROXIMATE REPRESENTATIONS OF INFORMATION OBTAINED FROM FIELD LOCATIONS OF VISIBLE FEATURES, EXISTING MAPS AND PLANS OF RECORD, UTILITY MAPPING, AND OTHER SOURCES OF INFORMATION OBTAINED BY THE ENGINEER. ASSUME NO GUARANTEE AS TO THE COMPLETENESS, SERVICEABILITY, EXISTENCE, OR ACCURACY OF UNDERGROUND FACILITIES. FIELD VERIFY THE EXACT LOCATIONS, SIZES, AND ELEVATIONS OF THE POINTS OF CONNECTIONS TO EXISTING UTILITIES.
3. PAY ALL FEES AND COSTS ASSOCIATED WITH UTILITY MODIFICATIONS AND CONNECTIONS, REGARDLESS OF THE ENTITY THAT PERFORMS THE WORK.
4. COORDINATE THE WORK AND WORK SCHEDULE WITH UTILITY COMPANIES. PROVIDE ADEQUATE NOTICE TO UTILITIES TO PREVENT DELAYS IN CONSTRUCTION.
5. INTERIOR DIAMETERS OF STORM DRAIN AND SANITARY SEWER STRUCTURES SHALL BE DETERMINED BY THE PRECAST MANUFACTURER, BASED ON THE INDICATED PIPE SYSTEM LAYOUT AND LOCAL MUNICIPAL STANDARDS.

   MINIMUM INTERIOR DIAMETERS:
   0 TO 20 FEET DEEP; 4 FEET.
   20 FEET OR GREATER; 5 FEET.

5. RIM ELEVATIONS FOR MANHOLES, VALVE COVERS, GATE AND PULL BOXES, AND OTHER STRUCTURES ARE APPROXIMATE. SET OR RESET RIM ELEVATIONS AS FOLLOWS:

   IN PAVEMENTS AND CONCRETE SURFACES: FLUSH
   IN SURFACES ALONG ACCESSIBLE ROUTES: FLUSH
   IN LANDSCAPE, SEEDED, AND OTHER EARTH SURFACE AREAS:
   1 INCH ABOVE SURROUNDING AREA; TAPER EARTH TO RIM ELEVATION.

6. INSTALL PROPOSED PRIVATE UTILITY SERVICES ACCORDING TO THE REQUIREMENTS PROVIDED BY, AND APPROVED BY THE AUTHORITY HAVING JURISDICTION (WATER, SEWER, GAS, TELEPHONE, ELECTRIC, FIRE ALARM, ETC.). COORDINATE FINAL DESIGN LOADS AND LOCATIONS WITH OWNER AND ARCHITECT.

SITE RESTORATION

1. PROVIDE 6 INCHES OF TOPSOIL AND SEED TO AREAS DISTURBED DURING CONSTRUCTION AND NOT DESIGNATED TO BE RESTORED WITH IMPERVIOUS SURFACES (PAVEMENTS, WALKS, ETC.) UNLESS OTHERWISE NOTED.
2. REPAIR DAMAGES RESULTING FROM CONSTRUCTION LOADS, AT NO ADDITIONAL COST TO OWNER.
3. RESTORE AREAS DISTURBED BY CONSTRUCTION OPERATIONS TO THEIR ORIGINAL CONDITION OR BETTER, AT NO ADDITIONAL COST TO OWNER.

LAND USE PERMITTING PLANS

No.	DATE	DESCRIPTION	DESIGNER	REVIEWER

SCALE: HORZ.: N.T.S. VERT.:
DATUM: HORZ.: VERT.:
0 GRAPHIC SCALE

FUSS & O'NEILL
146 HARTFORD ROAD
MANCHESTER, CONNECTICUT 06040
860.646.2469
www.fando.com

EVERGREEN WALK, LLC
GENERAL NOTES
EVERGREEN WALK PLANNED COMMUNITY
SOUTH WINDSOR CONNECTICUT

PROJ. No.: 2000481.Y21
DATE: 01/07/2021

GI-002

File Path: J:\DWG\P2000481\Y21\Civil\Plan\Tamarack Ave\2000481Y21_DET01.dwg Layout: GI-002 Plotted: Mon, January 04, 2021 - 10:52 AM User: jdeninger
MS VIEW: LAYER STATE: Plotter: AUTOCAD PDF (GENERAL DOCUMENTATION).PC3 CTB File: FO.STB

LAND USE PERMITTING PLANS

No.	DATE	DESCRIPTION	DESIGNER	REVIEWER
1.			XX/XX	XX

SCALE:
HORZ.: 1" = 200'
VERT.:
DATUM:
HORZ.:
VERT.:
200 100 0 200
GRAPHIC SCALE

FUSS & O'NEILL
146 HARTFORD ROAD
MANCHESTER, CONNECTICUT 06040
860.646.2469
www.fando.com

EVERGREEN WALK, LLC

AREA PLAN

TAMARACK AVENUE DESIGN

SOUTH WINDSOR CONNECTICUT

PROJ. No.: 2000481.Y21
DATE: 01/07/2021

GI-003

File Path: J:\DWG\P2000\4811Y21\Civil\Plan\20004811Y21_overall.dwg Layout: GI-003-TAMARACK Plotted: Mon, January 04, 2021 - 10:57 AM User: jdeninger
MS VIEW: LAYER STATE: Plotter: AUTOCAD PDF (GENERAL DOCUMENTATION).PC3 CTB File: FO.STB

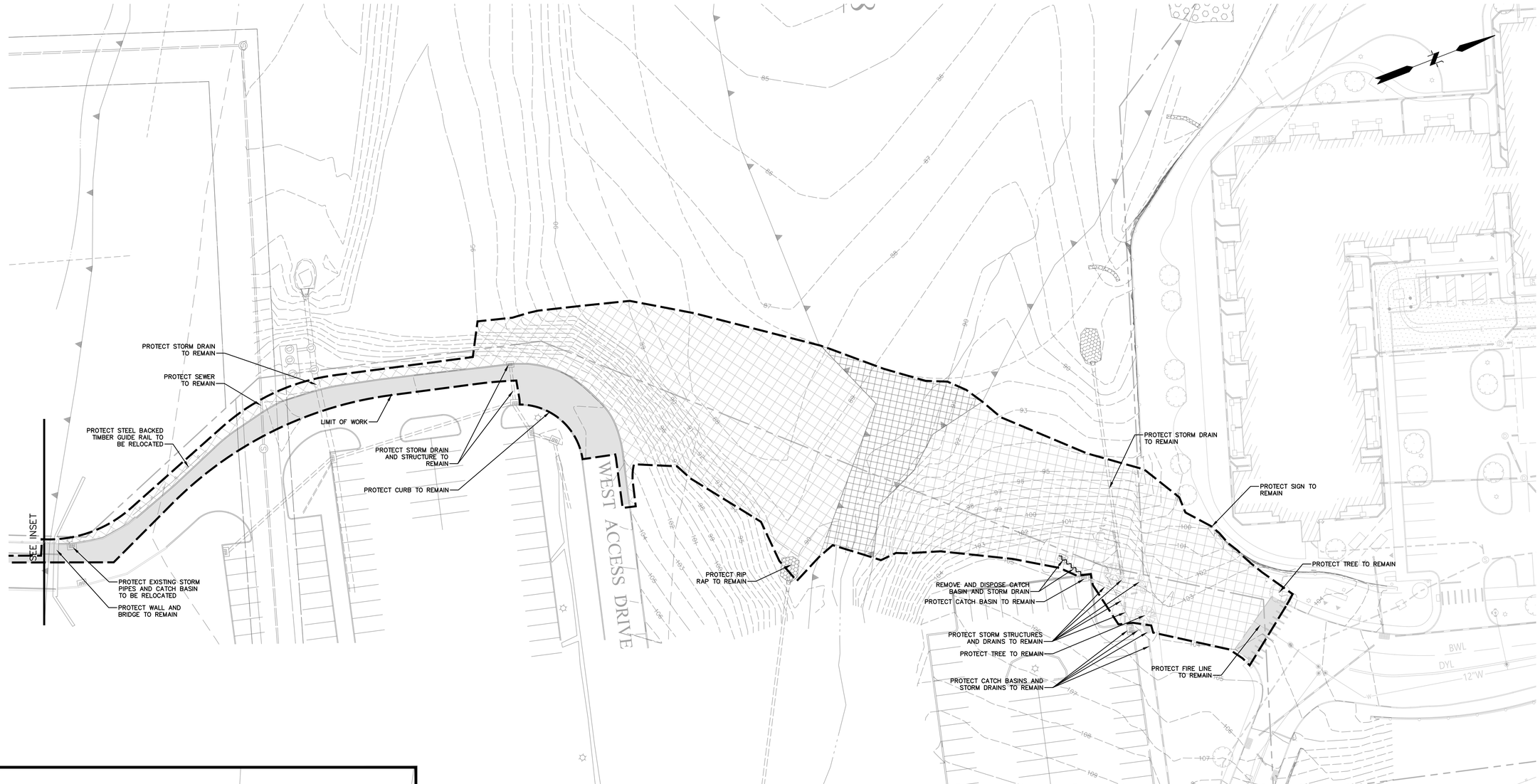

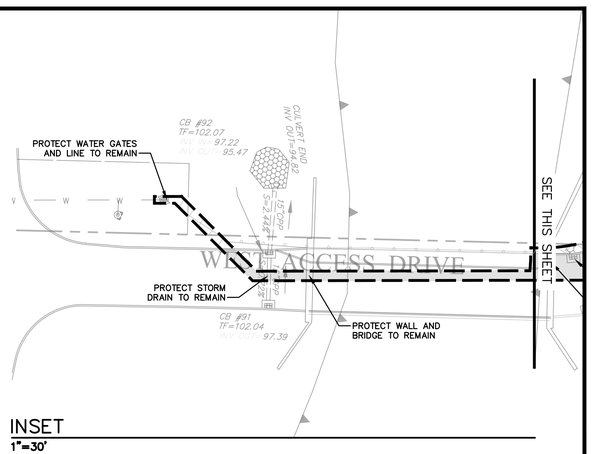

INSET
1"=30'

LEGEND

- LIMIT OF WORK
- PAVEMENT/CONCRETE DEMOLITION
- CLEAR AND GRUB WETLAND
- CLEAR AND GRUB EXISTING VEGETATION

NOTES:

1. PROTECT ITEMS TO REMAIN DURING CONSTRUCTION.
2. WHERE INDICATED, REMOVE EXISTING HARDSCAPED SURFACES (E.G. BITUMINOUS CONCRETE CURBS, CONCRETE WALKS, ETC.). SAWCUT HARDSCAPED SURFACES AT LIMIT OF REMOVAL. REMOVE CONCRETE WALKS AND CONCRETE CURBS TO NEAREST JOINT.
3. UNLESS INDICATED, EXISTING SITE IMPROVEMENTS (E.G. LIGHT POLES, FENCES, BOLLARDS, LANDSCAPING, ETC.) WITHIN THE LIMIT OF WORK ARE TO BE REMOVED.
4. UNLESS INDICATED, EXISTING UTILITIES WITHIN THE LIMIT OF WORK ARE TO BE ABANDONED OR REMOVED. PROPER COORDINATION WITH UTILITY PROVIDER IS REQUIRED PRIOR TO START OF WORK.
5. UTILITIES OUTSIDE THE LIMIT OF WORK ARE TO REMAIN UNLESS NOTED.
6. COORDINATE WITH UTILITY COMPANIES FOR UTILITIES TO BE RELOCATED, ABANDONED, OR REMOVED.

LAND USE PERMITTING PLANS

No.	DATE	DESCRIPTION	DESIGNER	REVIEWER

SCALE:
HORZ.: 1" = 30'
VERT.:
DATUM:
HORZ.:
VERT.:
30 15 0 30
GRAPHIC SCALE

FUSS & O'NEILL
146 HARTFORD ROAD
MANCHESTER, CONNECTICUT 06040
860.646.2469
www.fando.com

EVERGREEN WALK, LLC
SITE PREPARATION PLAN
EVERGREEN WALK PLANNED COMMUNITY
SOUTH WINDSOR CONNECTICUT

PROJ. No.: 2000481.Y21
DATE: 01/07/2021

CP-101

File Path: J:\DWG\P2000\481\Y21\Civil\Plan\Tamarack Ave\2000481Y21_ERO01.dwg Layout: CP-101 Plotted: Mon, January 04, 2021 - 11:04 AM User: jdeninger
MS VIEW: LAYER STATE: Plotter: AUTOCAD PDF (GENERAL DOCUMENTATION).PC3 CTB File: FO.STB

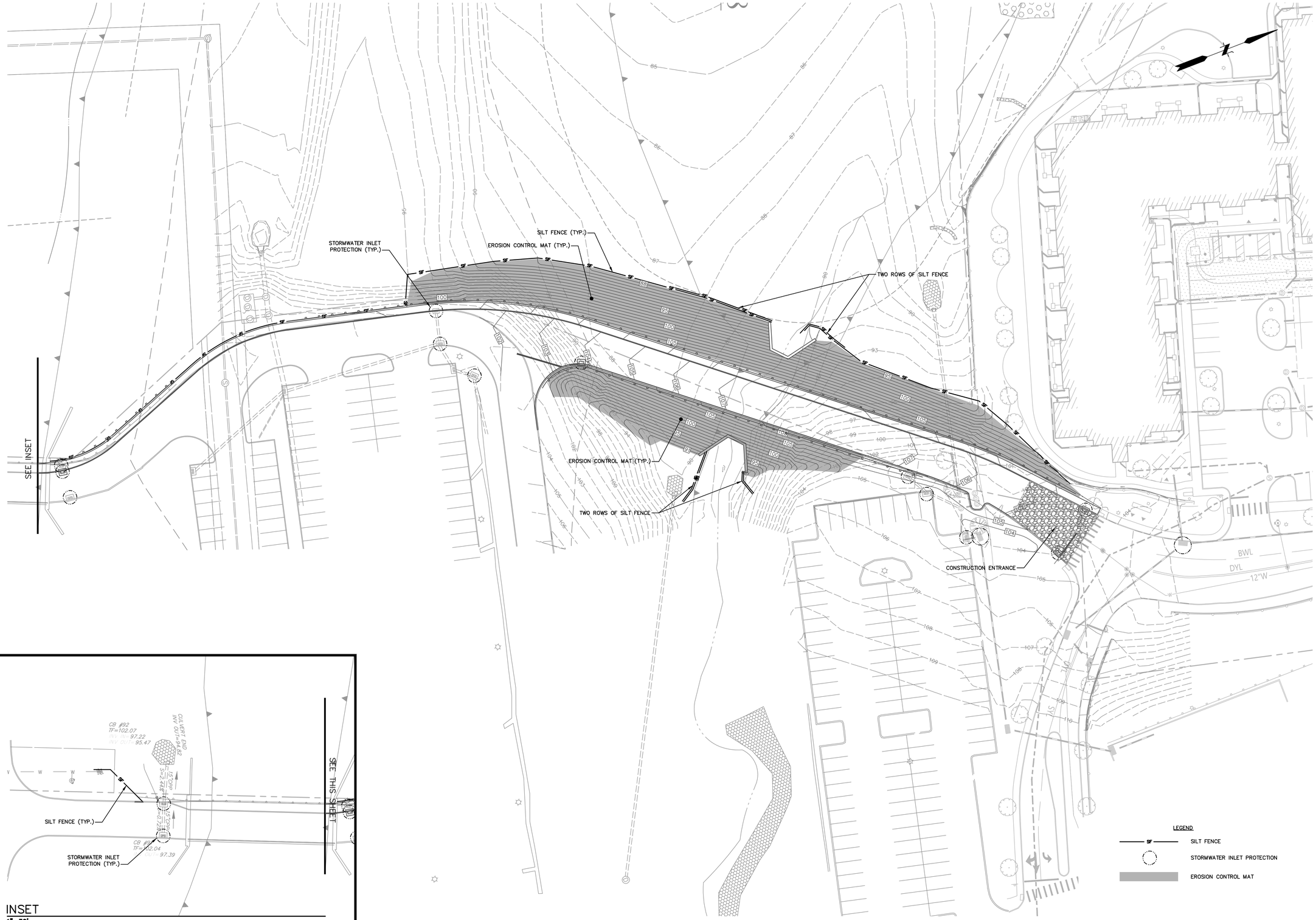

LAND USE PERMITTING PLANS

No.	DATE	DESCRIPTION	DESIGNER	REVIEWER

SCALE:
HORZ.: 1" = 30'
VERT.:
DATUM:
HORZ.:
VERT.:
30 15 0 30
GRAPHIC SCALE

FUSS & O'NEILL
146 HARTFORD ROAD
MANCHESTER, CONNECTICUT 06040
860.646.2469
www.fando.com

EVERGREEN WALK, LLC
EROSION & SEDIMENT CONTROL PLAN
EVERGREEN WALK PLANNED COMMUNITY
SOUTH WINDSOR CONNECTICUT

PROJ. No.: 2000481.Y21
DATE: 01/07/2021

CE-101

File Path: J:\DWG\P2000481\Y21\Civil\Plan\Tamarack Ave\2000481Y21_ERO01.dwg Layout: CE-101 Plotted: Mon, January 04, 2021 - 11:20 AM User: jdeninger
MS VIEW: LAYER STATE: Plotter: DWG TO PDF.PC3 CTB File: FO.STB

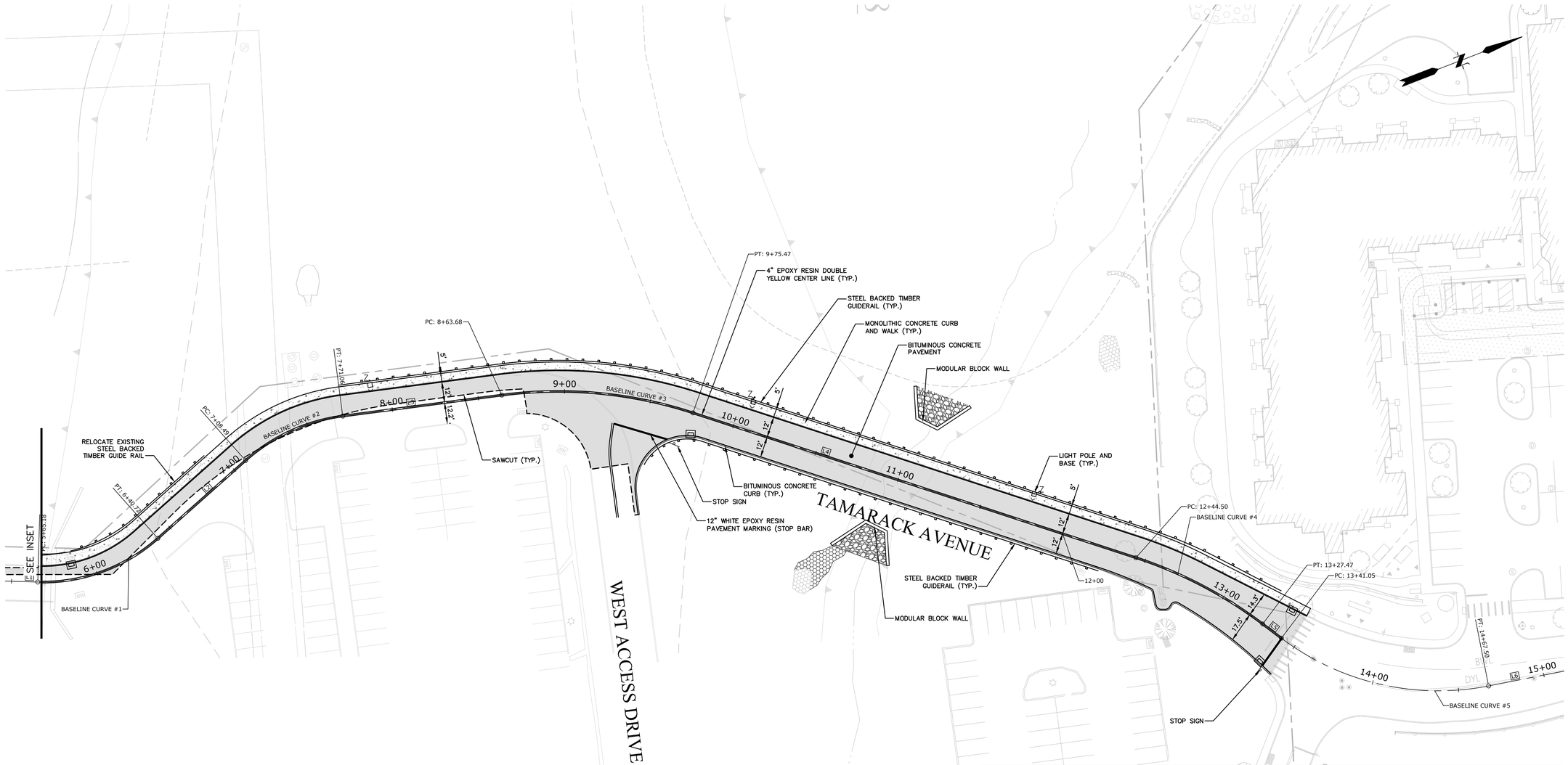

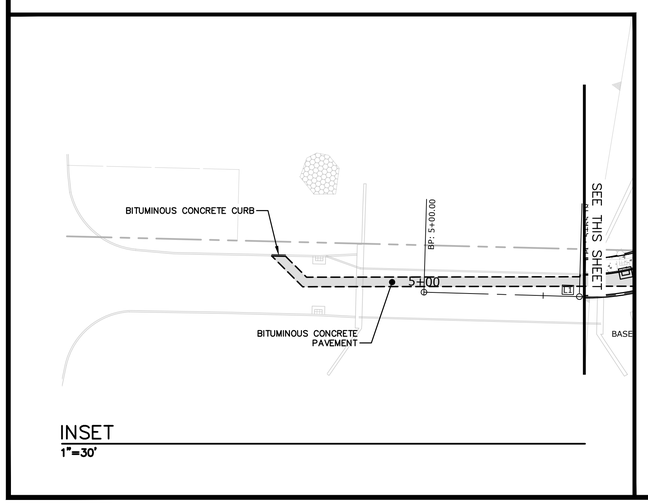

INSET
1"=30'

TAMARACK AVENUE CONSTRUCTION BASELINE DATA

N0.	BEGIN STATION	NORTHING	EASTING	CURVE DATA	LINE DATA	END STATION	NORTHING	EASTING
L1	5+00.00	856985.2503	1052160.8548		N22°45'52"E 65.18'	5+65.18	857045.3484	1052186.0738
BASELINE CURVE #1	5+65.18	857045.3484	1052186.0738	R=100.00' Δ=43°16'57" L=75.54' T=39.68'		6+40.72	857119.0932	1052187.5195
L2	6+40.72	857119.0932	1052187.5195		N20°31'06"W 67.78'	7+08.49	857182.5688	1052163.7639
BASELINE CURVE #2	7+08.49	857182.5688	1052163.7639	R=105.00' Δ=34°08'30" L=62.57' T=32.24'		7+71.06	857244.1036	1052160.0571
L3	7+71.06	857244.1036	1052160.0571		N13°37'25"E 92.62'	8+63.68	857334.1159	1052181.8724
BASELINE CURVE #3	8+63.68	857334.1159	1052181.8724	R=250.00' Δ=25°37'14" L=111.79' T=56.85'		9+75.47	857433.3865	1052231.2236
L4	9+75.47	857433.3865	1052231.2236		N39°14'38"E 269.03'	12+44.50	857641.7416	1052401.4200
BASELINE CURVE #4	12+44.50	857641.7416	1052401.4200	R=250.00' Δ=19°00'56" L=82.97' T=41.87'		13+27.47	857696.1956	1052463.5167
L5	13+27.47	857696.1956	1052463.5167		N58°15'34"E 13.58'	13+41.05	857703.3384	1052475.0636
BASELINE CURVE #5	13+41.05	857703.3384	1052475.0636	R=150.00' Δ=48°18'06" L=126.45' T=67.26'		14+67.50	857804.9659	1052543.8929
L6	14+67.50	857804.9659	1052543.8929		N9°57'28"E 82.50'	15+50.00	857886.2193	1052558.1584

LAND USE PERMITTING PLANS

No.	DATE	DESCRIPTION	DESIGNER	REVIEWER

SCALE:
HORZ.: 1" = 30'
VERT.:
DATUM:
HORZ.:
VERT.:
30 15 0 30
GRAPHIC SCALE

FUSS & O'NEILL
146 HARTFORD ROAD
MANCHESTER, CONNECTICUT 06040
860.646.2469
www.fando.com

EVERGREEN WALK, LLC
SITE LAYOUT PLAN
EVERGREEN WALK PLANNED COMMUNITY
SOUTH WINDSOR CONNECTICUT

PROJ. No.: 2000481.Y21
DATE: 01/07/2021

CS-101

File Path: J:\DWG\P2000481\Y21\Civil\Plan\Tamarack Ave\2000481Y21_HWD01.dwg Layout: CS-101 Plotted: Mon, January 04, 2021 - 11:06 AM User: jdeninger
Plotter: AUTOCAD PDF (GENERAL DOCUMENTATION).PC3 CTB File: FO.STB
LAYER STATE:
MS VIEW:

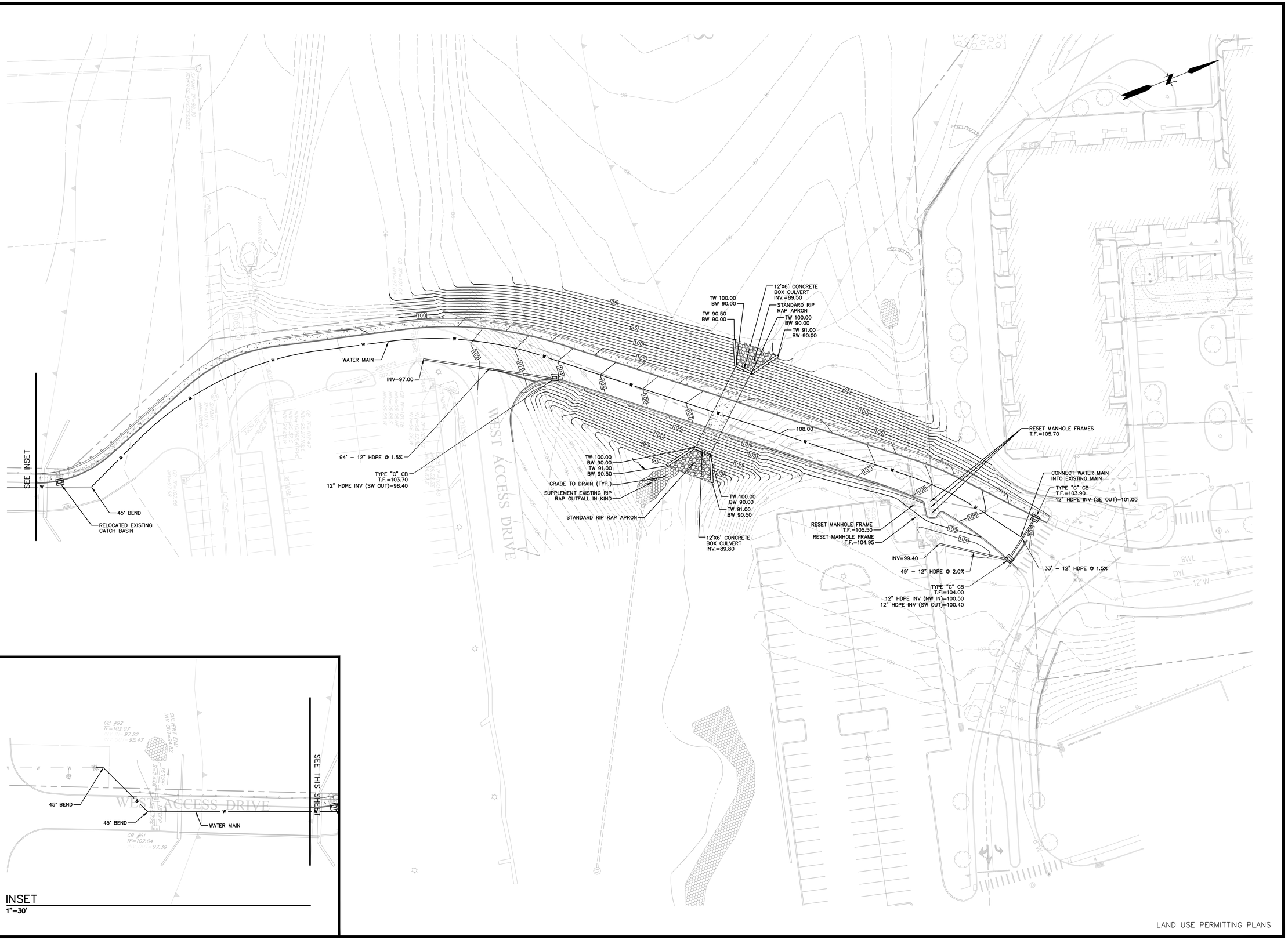

LAND USE PERMITTING PLANS

No.	DATE	DESCRIPTION	DESIGNER	REVIEWER

SCALE:
HORZ.: 1" = 30'
VERT.:
DATUM:
HORZ.:
VERT.:
30 15 0 30
GRAPHIC SCALE

FUSS & O'NEILL
146 HARTFORD ROAD
MANCHESTER, CONNECTICUT 06040
860.646.2469
www.fando.com

EVERGREEN WALK, LLC
GRADING AND DRAINAGE PLAN
EVERGREEN WALK PLANNED COMMUNITY
SOUTH WINDSOR CONNECTICUT

PROJ. No.: 2000481.Y21
DATE: 01/07/2021

CG-101

File Path: J:\DWG\P2000481Y21\Civil\Plan\Tamarack Ave\2000481Y21_GRD01.dwg Layout: CG-101 Plotted: Mon, January 04, 2021 - 11:08 AM User: jdeninger
Plotter: AUTOCAD PDF (GENERAL DOCUMENTATION).PC3 CTB File: FO.STB
MS VIEW:
LAYER STATE:

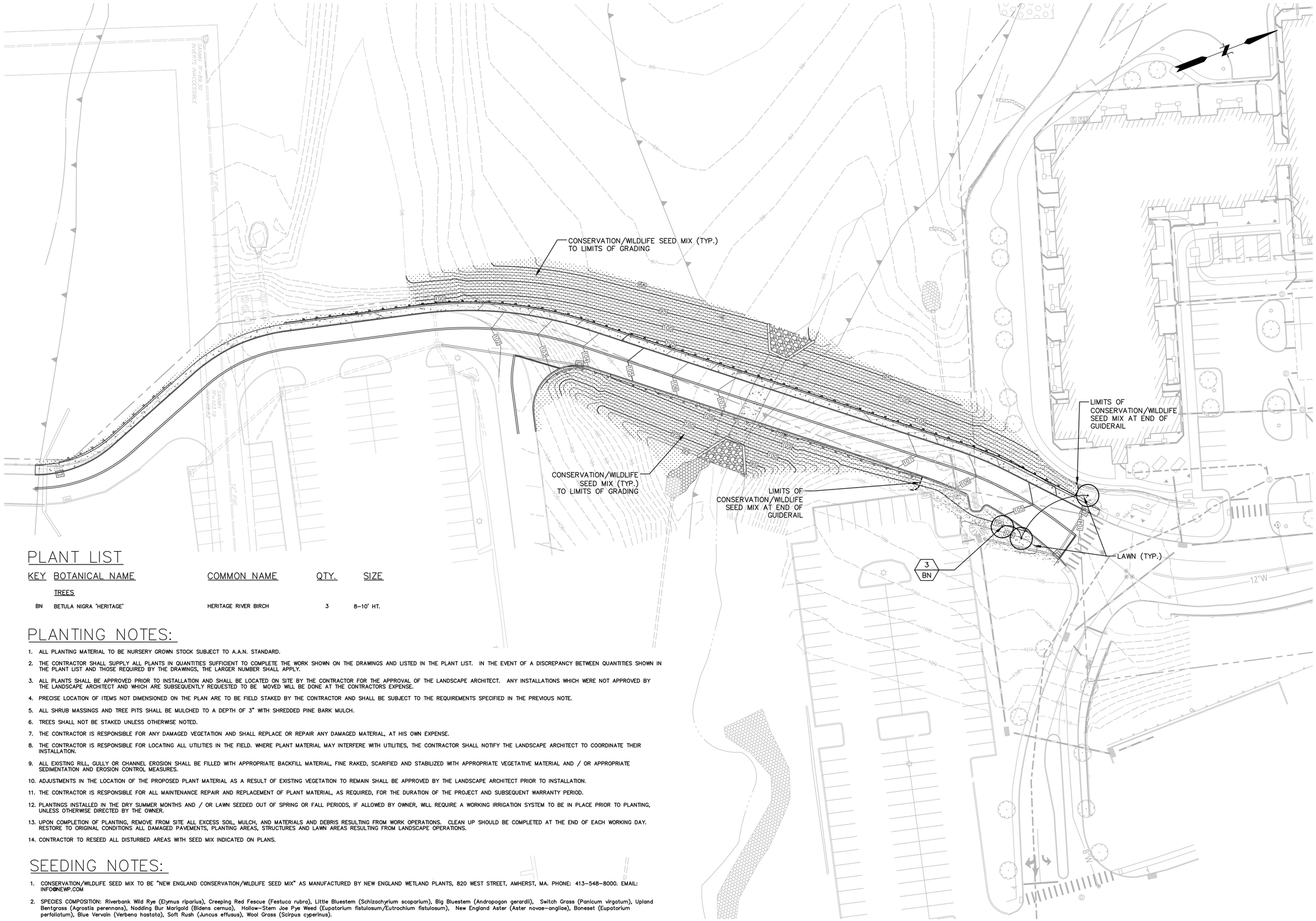

PLANT LIST

KEY	BOTANICAL NAME	COMMON NAME	QTY.	SIZE
	TREES			
BN	BETULA NIGRA 'HERITAGE'	HERITAGE RIVER BIRCH	3	8–10' HT.

PLANTING NOTES:

1. ALL PLANTING MATERIAL TO BE NURSERY GROWN STOCK SUBJECT TO A.A.N. STANDARD.
2. THE CONTRACTOR SHALL SUPPLY ALL PLANTS IN QUANTITIES SUFFICIENT TO COMPLETE THE WORK SHOWN ON THE DRAWINGS AND LISTED IN THE PLANT LIST. IN THE EVENT OF A DISCREPANCY BETWEEN QUANTITIES SHOWN IN THE PLANT LIST AND THOSE REQUIRED BY THE DRAWINGS, THE LARGER NUMBER SHALL APPLY.
3. ALL PLANTS SHALL BE APPROVED PRIOR TO INSTALLATION AND SHALL BE LOCATED ON SITE BY THE CONTRACTOR FOR THE APPROVAL OF THE LANDSCAPE ARCHITECT. ANY INSTALLATIONS WHICH WERE NOT APPROVED BY THE LANDSCAPE ARCHITECT AND WHICH ARE SUBSEQUENTLY REQUESTED TO BE MOVED WILL BE DONE AT THE CONTRACTORS EXPENSE.
4. PRECISE LOCATION OF ITEMS NOT DIMENSIONED ON THE PLAN ARE TO BE FIELD STAKED BY THE CONTRACTOR AND SHALL BE SUBJECT TO THE REQUIREMENTS SPECIFIED IN THE PREVIOUS NOTE.
5. ALL SHRUB MASSINGS AND TREE PITS SHALL BE MULCHED TO A DEPTH OF 3" WITH SHREDDED PINE BARK MULCH.
6. TREES SHALL NOT BE STAKED UNLESS OTHERWISE NOTED.
7. THE CONTRACTOR IS RESPONSIBLE FOR ANY DAMAGED VEGETATION AND SHALL REPLACE OR REPAIR ANY DAMAGED MATERIAL, AT HIS OWN EXPENSE.
8. THE CONTRACTOR IS RESPONSIBLE FOR LOCATING ALL UTILITIES IN THE FIELD. WHERE PLANT MATERIAL MAY INTERFERE WITH UTILITIES, THE CONTRACTOR SHALL NOTIFY THE LANDSCAPE ARCHITECT TO COORDINATE THEIR INSTALLATION.
9. ALL EXISTING RILL, GULLY OR CHANNEL EROSION SHALL BE FILLED WITH APPROPRIATE BACKFILL MATERIAL, FINE RAKED, SCARIFIED AND STABILIZED WITH APPROPRIATE VEGETATIVE MATERIAL AND / OR APPROPRIATE SEDIMENTATION AND EROSION CONTROL MEASURES.
10. ADJUSTMENTS IN THE LOCATION OF THE PROPOSED PLANT MATERIAL AS A RESULT OF EXISTING VEGETATION TO REMAIN SHALL BE APPROVED BY THE LANDSCAPE ARCHITECT PRIOR TO INSTALLATION.
11. THE CONTRACTOR IS RESPONSIBLE FOR ALL MAINTENANCE REPAIR AND REPLACEMENT OF PLANT MATERIAL, AS REQUIRED, FOR THE DURATION OF THE PROJECT AND SUBSEQUENT WARRANTY PERIOD.
12. PLANTINGS INSTALLED IN THE DRY SUMMER MONTHS AND / OR LAWN SEEDED OUT OF SPRING OR FALL PERIODS, IF ALLOWED BY OWNER, WILL REQUIRE A WORKING IRRIGATION SYSTEM TO BE IN PLACE PRIOR TO PLANTING, UNLESS OTHERWISE DIRECTED BY THE OWNER.
13. UPON COMPLETION OF PLANTING, REMOVE FROM SITE ALL EXCESS SOIL, MULCH, AND MATERIALS AND DEBRIS RESULTING FROM WORK OPERATIONS. CLEAN UP SHOULD BE COMPLETED AT THE END OF EACH WORKING DAY. RESTORE TO ORIGINAL CONDITIONS ALL DAMAGED PAVEMENTS, PLANTING AREAS, STRUCTURES AND LAWN AREAS RESULTING FROM LANDSCAPE OPERATIONS.
14. CONTRACTOR TO RESEED ALL DISTURBED AREAS WITH SEED MIX INDICATED ON PLANS.

SEEDING NOTES:

1. CONSERVATION/WILDLIFE SEED MIX TO BE "NEW ENGLAND CONSERVATION/WILDLIFE SEED MIX" AS MANUFACTURED BY NEW ENGLAND WETLAND PLANTS, 820 WEST STREET, AMHERST, MA. PHONE: 413–548–8000. EMAIL: INFO@NEWP.COM
2. SPECIES COMPOSITION: Riverbank Wild Rye (Elymus riparius), Creeping Red Fescue (Festuca rubra), Little Bluestem (Schizachyrium scoparium), Big Bluestem (Andropogon gerardii), Switch Grass (Panicum virgatum), Upland Bentgrass (Agrostis perennans), Nodding Bur Marigold (Bidens cernua), Hollow–Stem Joe Pye Weed (Eupatorium fistulosum/Eutrochium fistulosum), New England Aster (Aster novae–angliae), Boneset (Eupatorium perfoliatum), Blue Vervain (Verbena hastata), Soft Rush (Juncus effusus), Wool Grass (Scirpus cyperinus).
3. APPLICATION RATE: 25 LBS/ACRE (1 LB/1,750 SF). SOIL PREPARATION AND APPLICATION METHODOLOGY PER MANUFACTURER'S SUGGESTIONS.

LAND USE PERMITTING PLANS

No.	DATE	DESCRIPTION	DESIGNER	REVIEWER

SCALE:
HORZ.: 1" = 30'
VERT.:
DATUM:
HORZ.:
VERT.:
30 15 0 30
GRAPHIC SCALE

FUSS & O'NEILL
146 HARTFORD ROAD
MANCHESTER, CONNECTICUT 06040
860.646.2469
www.fando.com

EVERGREEN WALK, LLC
LANDSCAPE PLAN
EVERGREEN WALK PLANNED COMMUNITY
SOUTH WINDSOR CONNECTICUT

PROJ. No.: 2000481.Y21
DATE: 01/07/2021

LP-101

File Path: J:\DWG\P2000481\Y21\Civil\Plan\Tamarack Ave\2000481Y21_LND01.dwg Layout: LP-101 Plotted: Mon, January 04, 2021 - 11:10 AM User: jdeninger
MS VIEW: LAYER STATE: Plotter: AUTOCAD PDF (GENERAL DOCUMENTATION).PC3 CTB File: FO.STB

Site Lighting Calculation Summary (in footcandles)					
Area of Calculation	Average	Maximum	Minimum	Max/Min	Ave/Min
ROADWAY	1.80	3.00	0.40	7.5:1	4.5:1

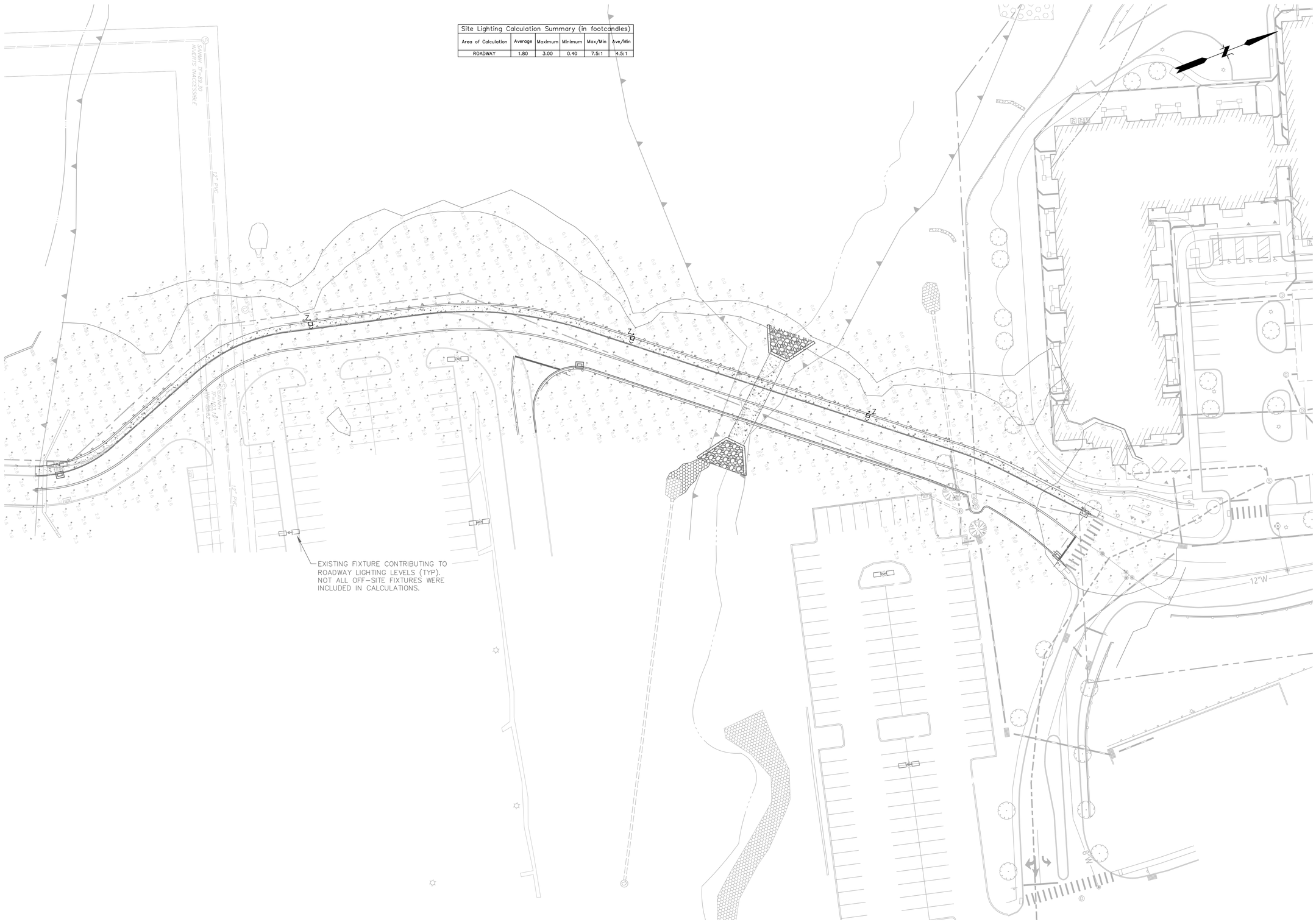

LAND USE PERMITTING PLANS

No.	DATE	DESCRIPTION	DESIGNER	REVIEWER

SCALE:
HORZ.: 1" = 30'
VERT.:
DATUM:
HORZ.:
VERT.:
30 15 0 30
GRAPHIC SCALE

FUSS & O'NEILL
146 HARTFORD ROAD
MANCHESTER, CONNECTICUT 06040
860.646.2469
www.fuss&o'neill.com

EVERGREEN WALK, LLC

SITE LIGHTING PLAN

EVERGREEN WALK PLANNED COMMUNITY

SOUTH WINDSOR CONNECTICUT

PROJ. No.: 2000481Y21
DATE: 01/07/2021

CL-101

File Path: J:\DWG\P2000481Y21\Civil\Plan\Tamarack Ave\2000481Y21_LUM01.dwg Layout: CL-101 Plotted: Mon, January 04, 2021 - 11:12 AM User: jdeninger
MS VIEW: LAYER STATE: Plotter: AUTOCAD PDF (GENERAL DOCUMENTATION).PC3 CTB File: FO.STB

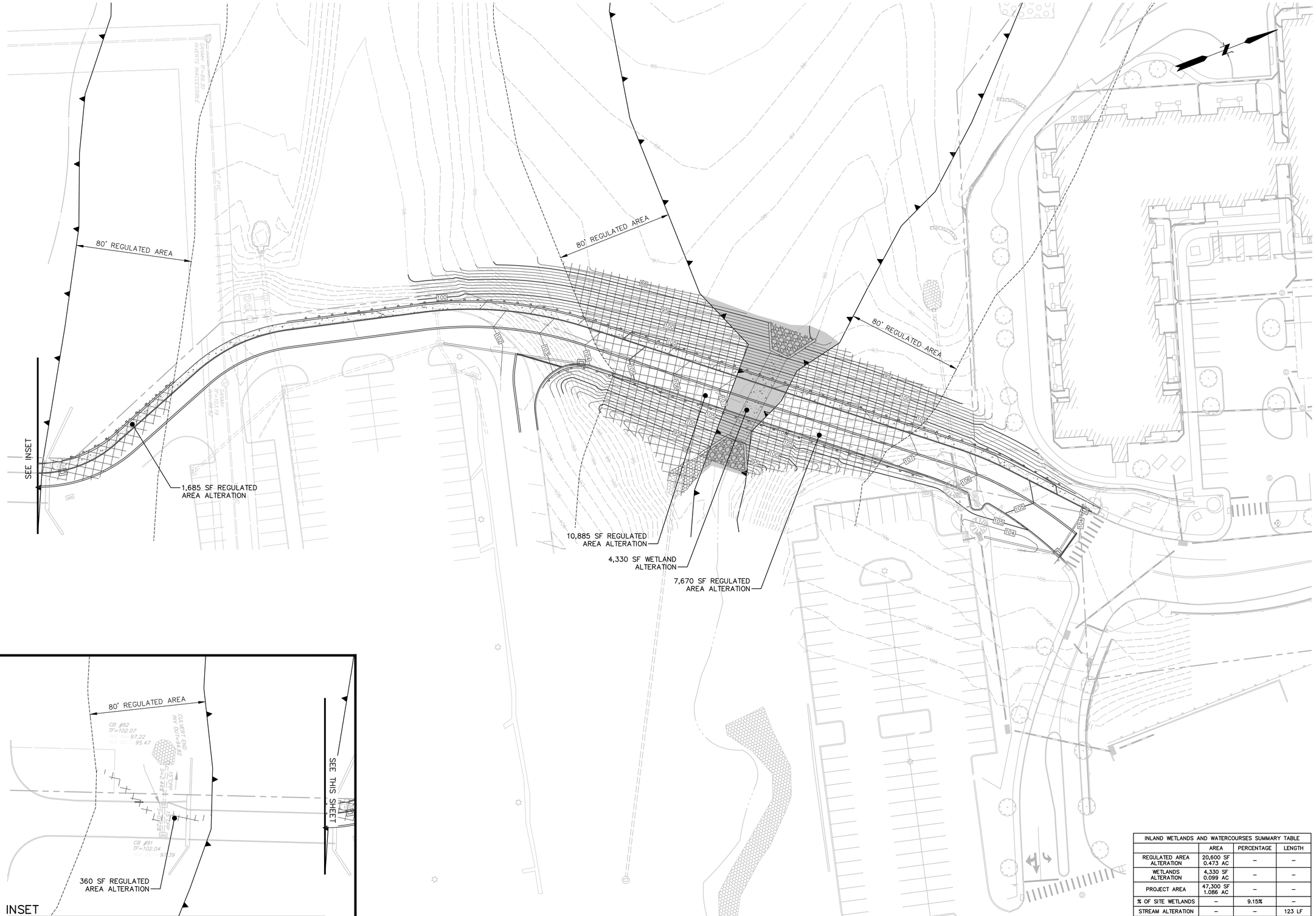

INLAND WETLANDS AND WATERCOURSES SUMMARY TABLE			
	AREA	PERCENTAGE	LENGTH
REGULATED AREA ALTERATION	20,600 SF 0.473 AC	–	–
WETLANDS ALTERATION	4,330 SF 0.099 AC	–	–
PROJECT AREA	47,300 SF 1.086 AC	–	–
% OF SITE WETLANDS	–	9.15%	–
STREAM ALTERATION	–	–	123 LF

LAND USE PERMITTING PLANS

No.	DATE	DESCRIPTION	DESIGNER	REVIEWER

SCALE:
HORZ.: 1" = 30'
VERT.:
DATUM:
HORZ.:
VERT.:
30 15 0 30
GRAPHIC SCALE

FUSS & O'NEILL
146 HARTFORD ROAD
MANCHESTER, CONNECTICUT 06040
860.646.2469
www.fando.com

EVERGREEN WALK, LLC

WETLANDS ALTERATION PLAN

EVERGREEN WALK PLANNED COMMUNITY

SOUTH WINDSOR CONNECTICUT

PROJ. No.: 2000481.Y21
DATE: 01/07/2021

CW-101

File Path: J:\DWG\P2000481\Y21\Civil\Plan\Tamarack Ave\2000481Y21_WET01.dwg Layout: CW-101 Plotted: Mon, January 04, 2021 - 11:14 AM User: jdeninger
MS VIEW: LAYER STATE: Plotter: AUTOCAD PDF (GENERAL DOCUMENTATION).PC3 CTB File: FO.STB

EROSION & SEDIMENT CONTROL NOTES

1. CONSTRUCTION STANDARDS – CONSTRUCT ALL EROSION AND SEDIMENT CONTROL MEASURES IN ACCORDANCE WITH THE STANDARDS AND SPECIFICATIONS OF THE MOST RECENT EDITION OF THE "CONNECTICUT GUIDELINES FOR SOIL EROSION AND SEDIMENT CONTROL" (CT DEP BULLETIN 34). ALL MEASURES SHALL BE MAINTAINED AND UPGRADED TO ACHIEVE PROPER SEDIMENT CONTROL DURING CONSTRUCTION.

2. PLAN IMPLEMENTATION – IMPLEMENT THIS EROSION AND SEDIMENT CONTROL PLAN. THIS IMPLEMENTATION INCLUDES THE INSTALLATION AND MAINTENANCE OF CONTROL MEASURES UNTIL PERMANENT STABILIZATION IS ACHIEVED, INFORMING ALL SUBCONTRACTORS OF THE REQUIREMENTS AND OBJECTIVES OF THE PLAN, AND NOTIFYING THE PROPER MUNICIPAL AGENCY OF ANY TRANSFER OF THIS RESPONSIBILITY. THE OWNER SHALL BE RESPONSIBLE FOR CONVEYING A COPY OF THE EROSION AND SEDIMENT CONTROL PLAN TO THE NEW OWNER IF THE TITLE OF THE LAND IS TRANSFERRED PRIOR TO ACHIEVING PERMANENT STABILIZATION.

3. INSTALLATION SCHEDULE – INSTALL THE CONSTRUCTION ENTRANCE BEFORE CONSTRUCTION TRAFFIC INTO AND OUT OF THE PROJECT AREA BEGINS. INSTALL EROSION AND SEDIMENT CONTROL MEASURES PRIOR TO STUMP REMOVAL AND CONSTRUCTION. INSTALL ADDITIONAL CONTROL MEASURES DURING THE CONSTRUCTION PERIOD, IF DEEMED NECESSARY BY THE OWNER, HIS AGENTS OR AGENTS OF THE MUNICIPALITY.

4. FUGITIVE DUST – CONTROL FUGITIVE DUST USING WATER SPRAYS OR CALCIUM CHLORIDE ON SOIL SURFACES, SWEEPING PAVED AREAS, TEMPORARY WINDBREAKS OR NON–ASPHALTIC SOIL TACKIFIERS.

5. STRAW BALE LIFE SPAN – INSTALL STRAW BALES WHERE PROTECTION AND EFFECTIVENESS IS REQUIRED FOR LESS THAN 90 DAYS. OTHERWISE, INSTALL SILT FENCE.

6. CATCH BASINS – PROTECT CATCH BASINS WITH PROPER CONTROLS THROUGHOUT THE CONSTRUCTION PERIOD UNTIL ALL DISTURBED AREAS ARE PERMANENTLY STABILIZED.

7. STOCKPILES – ENCIRCLE STOCKPILES OF ERODIBLE SOIL WITH A STRAW BALE OR SILT FENCE BARRIER. THE SIDE SLOPES OF ERODIBLE STOCKPILED MATERIAL SHALL BE NO STEEPER THAN 2:1. STOCKPILES THAT ARE NOT TO BE USED WITHIN 30 DAYS SHALL BE SEEDED AND MULCHED IMMEDIATELY AFTER THEY ARE FORMED.

8. TOE OF SLOPE – ESTABLISH AN EROSION CONTROL BARRIER (SILT FENCE OR STRAW BALE BARRIER) APPROXIMATELY 5 TO 10 FEET FROM THE PROPOSED TOE OF THE CUT OR FILL AREA PRIOR TO BEGINNING EARTHWORK.

9. SEDIMENT REMOVAL – SEDIMENT REACHING ½ THE HEIGHT OF THE EROSION CONTROL BARRIER SHALL BE REMOVED. REMOVE AND DISPOSE OF SEDIMENT IN A MANNER CONSISTENT WITH THE INTENT OF THE PLAN.

10. SOIL STABILIZATION SCHEDULE – APPLY PERMANENT SOIL STABILIZATION MEASURES TO ALL GRADED AREAS WITHIN 7 DAYS OF ESTABLISHING FINAL GRADE. APPLY TEMPORARY SOIL STABILIZATION MEASURES IF FINAL GRADING IS TO BE DELAYED MORE THAN 30 DAYS.

11. TEMPORARY SEEDING – TEMPORARILY SEED ERODIBLE SOILS THAT WILL BE EXPOSED GREATER THAN 1 BUT LESS THAN 12 MONTHS WITHIN THE FIRST 7 DAYS OF SUSPENDING GRADING OPERATIONS. APPLY LIME AT A RATE OF 90 LBS/1000 SQ. FT. APPLY 10–10–10 FERTILIZER AT A RATE OF 7 ½ LBS/1000 SQ. FT. APPLY PERENNIAL RYE GRASS AT A RATE OF 2 LBS/1000 SQ. FT. TO A DEPTH OF ½ INCH. OPTIMUM SEEDING DATES ARE MARCH 15 TO JULY 1 AND AUGUST 1 TO OCTOBER 15. MULCH FOR SEED APPLIED WITHIN THE OPTIMUM SEEDING DATES SHALL BE APPLIED EVENLY SUCH THAT IT PROVIDES 80%–95% SOIL COVERAGE. MULCH FOR SEED APPLIED OUTSIDE OF THE OPTIMUM SEEDING DATES SHALL BE APPLIED EVENLY SUCH THAT IT PROVIDES 95%–100% COVERAGE.

12. PERMANENT SEEDING – SEED PERMANENT LAWN AREAS IN ACCORDANCE WITH THE SPECIFICATIONS.

13. INSPECTION – THE OWNER SHALL SECURE THE SERVICES OF A SOIL SCIENTIST OR PROFESSIONAL ENGINEER TO VERIFY IN THE FIELD THAT THE CONTROLS REQUIRED BY THIS PLAN ARE PROPERLY INSTALLED AND MAINTAINED. THESE INSPECTIONS SHALL BE NOT LESS FREQUENTLY THAN WEEKLY AND WITHIN 24 HOURS OF THE END OF A STORM HAVING A RAINFALL AMOUNT OF 0.1 INCH OR GREATER. FOLLOWING THESE INSPECTIONS, A WRITTEN REPORT SHALL BE PREPARED, INFORMING THE OWNER OR HIS AGENT NOT LESS FREQUENTLY THAN WEEKLY AND THE MUNICIPALITY NOT LESS FREQUENTLY THAN MONTHLY OF OBSERVATIONS, MAINTENANCE, AND CORRECTIVE ACTIVITIES UNDERTAKEN.

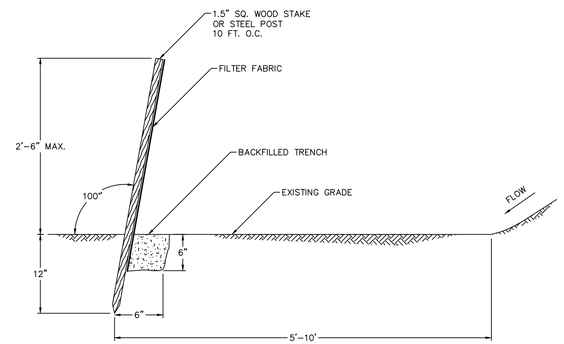

SILT FENCE
NOT TO SCALE

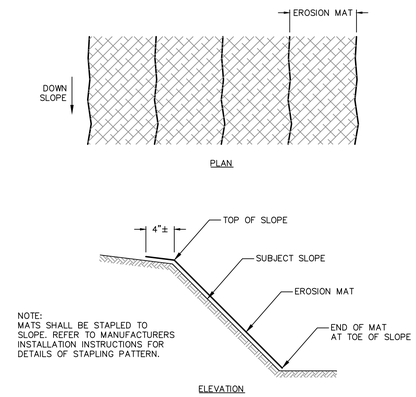

EROSION CONTROL MAT
NOT TO SCALE

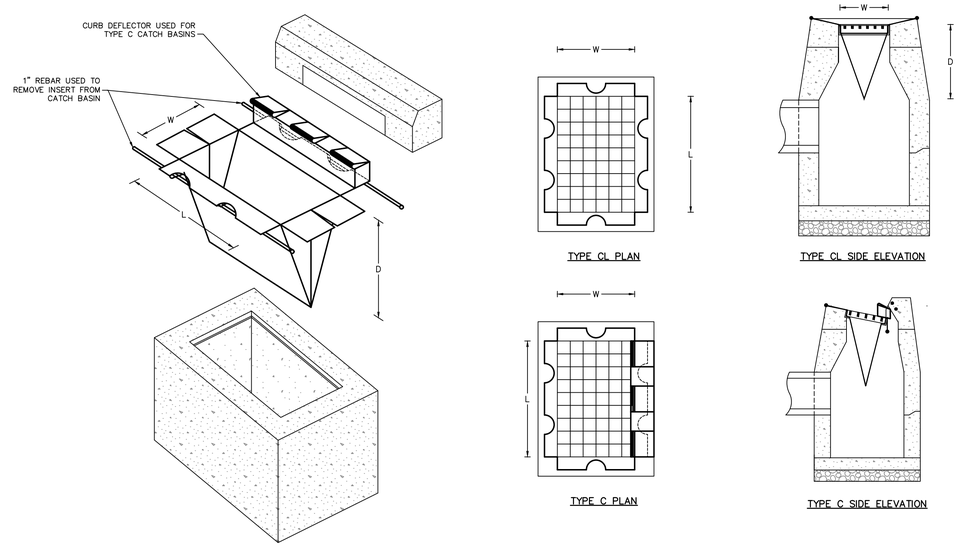

CATCH BASIN INSERT
NOT TO SCALE

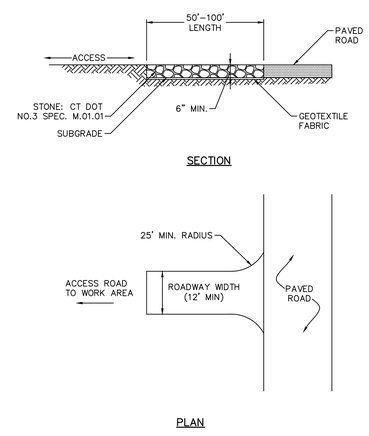

CONSTRUCTION ENTRANCE
NOT TO SCALE

LAND USE PERMITTING PLANS

No.	DATE	DESCRIPTION	DESIGNER	REVIEWER

SCALE: HORZ.: N.T.S. VERT.:
DATUM: HORZ.: VERT.:
0 GRAPHIC SCALE

FUSS & O'NEILL
146 HARTFORD ROAD
MANCHESTER, CONNECTICUT 06040
860.646.2469
www.fando.com

EVERGREEN WALK, LLC
EROSION & SEDIMENT CONTROL DETAILS
EVERGREEN WALK PLANNED COMMUNITY
SOUTH WINDSOR CONNECTICUT

PROJ. No.: 2000481.Y21
DATE: 01/07/2021

CD-501

File Path: J:\DWG\P2000481\Y21\Civil\Plan\Tamarack Ave\2000481Y21_DET01.dwg Layout: CD-501 Plotted: Mon, January 04, 2021 - 11:14 AM User: jdeninger
MS VIEW: LAYER STATE: Plotter: AUTOCAD PDF (GENERAL DOCUMENTATION).PC3 CTB File: FO.STB

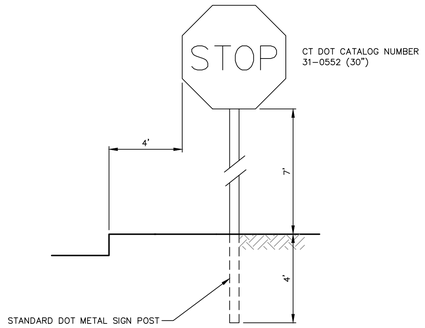

SIGN
NOT TO SCALE

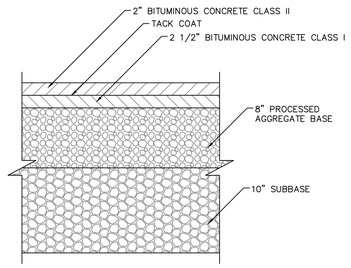

BITUMINOUS CONCRETE PAVEMENT
NOT TO SCALE

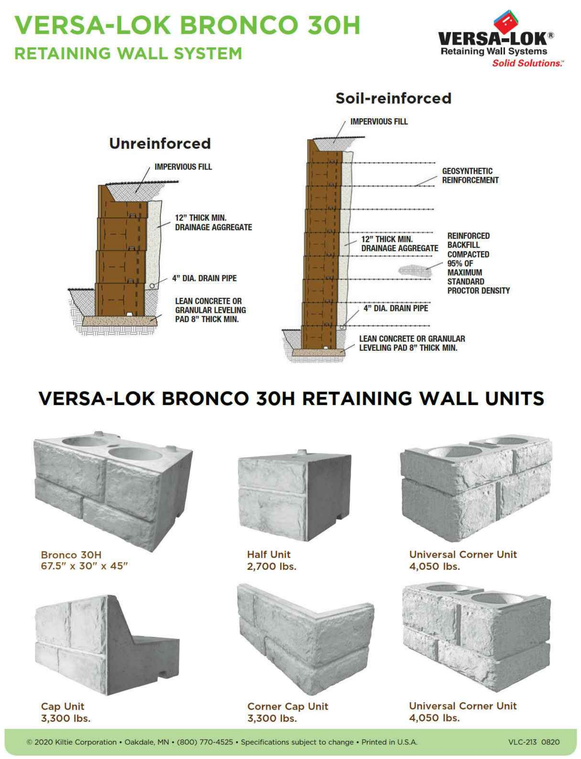

MODULAR BLOCK WALL
NOT TO SCALE

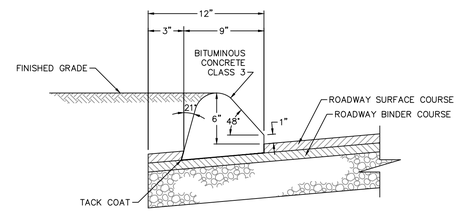

BITUMINOUS CONCRETE CURB
NOT TO SCALE

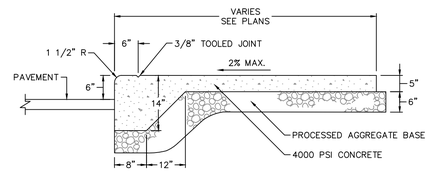

MONOLITHIC CONCRETE CURB AND WALK
NOT TO SCALE

LAND USE PERMITTING PLANS

No.	DATE	DESCRIPTION	DESIGNER	REVIEWER

SCALE: HORZ.: N.T.S. VERT.:
DATUM: HORZ.: VERT.:
0 GRAPHIC SCALE

FUSS & O'NEILL
146 HARTFORD ROAD
MANCHESTER, CONNECTICUT 06040
860.646.2469
www.fando.com

EVERGREEN WALK, LLC
SITE DETAILS
EVERGREEN WALK PLANNED COMMUNITY
SOUTH WINDSOR CONNECTICUT

PROJ. No.: 2000481.Y21
DATE: 01/07/2021

CD-502

File Path: J:\DWG\P2000481\Y21\Civil\Plan\Tamarack Ave\2000481Y21_DET01.dwg Layout: CD-502 Plotted: Mon, January 04, 2021 - 11:14 AM User: jdeninger
MS VIEW: LAYER STATE: Plotter: AUTOCAD PDF (GENERAL DOCUMENTATION).PC3 CTB File: FO.STB

NOTES

1. DELINEATOR REFLECTORS SHALL BE BROWN PLASTIC INVERTED T–SECTIONS CONFORMING TO DURAFLEX CORP. SLEXX 2020, OR APPROVED EQUAL. REFLECTIVE SHEETING SHALL BE SQUARE AND A MIN. OF 9 SQUARE INCHES, AND CONFORM TO SECTION M.18.09. DELINEATORS SHALL BE ATTACHED WITH FOUR (4) 1"–LONG, GALVANIZED WOOD SREWS. REFLECTORS SHALL BE SPACED IN ACCORDANCE WITH THE TABLE, AND POSITIONED PERPENDICULAR TO THE ADJACENT EDGE OF LANE. DO NOT ATTACH REFLECTORS ON FLAIR OR TERMINAL SECTIONS. REFLECTIVE SHEETING SHALL BE SILVER–WHITE ON ALL RAIL SECTIONS ADJACENT TO THE RIGHT SHOULDER, AND YELLOW ON RAIL SECTIONS ADJACENT TO THE LEFT SHOULDER OF TRAVEL LANES.

2. A 5/8" DIA. X 4" LAG SCREW AND WASHER SHALL BE INSTALLED IN PLACE OF THE 5/8" DIA. X 13" CARRIAGE BOLT IN THE ABSENCE OF ANY MID–RAIL POST CONNECTION.

3. ALL CONNECTION HARDWARE SHALL BE SUFFICIENTLY TIGHTENED TO ACCOMMODATE FOR SHRINKAGE OF THE WOOD ELEMENTS.

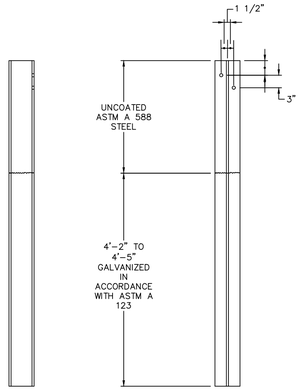

POST DETAIL

TABLE 2		
RADIUS R (ft..)	B/2 (Degrees)	D (1 inches)
35 min.	4.10	5/8"
Over 70	Flat	0

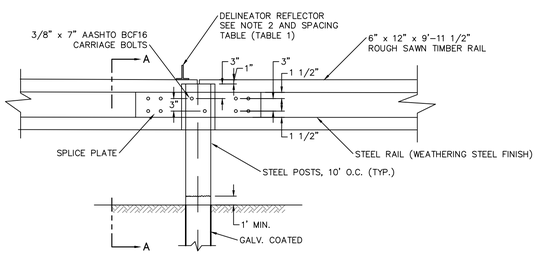

POST CONNECTION ELEVATION

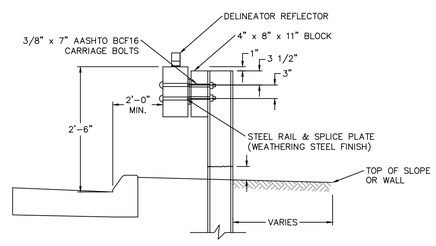

SECTION A–A

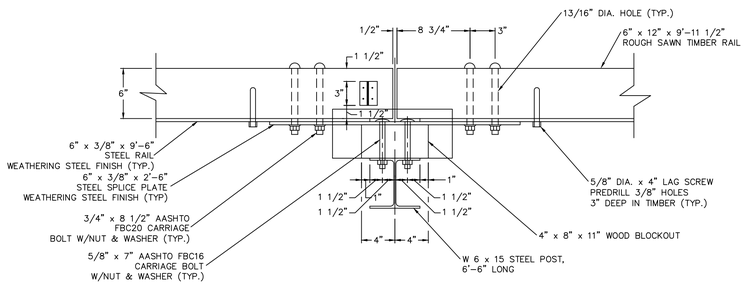

POST CONNECTION PLAN
(DIMENSIONS ARE TYPICAL)

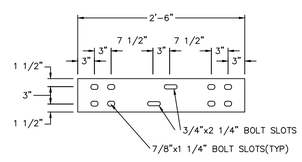

STEEL SPLICE PLATE DETAIL

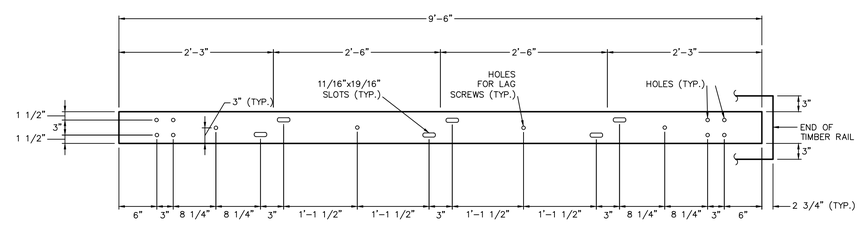

STEEL RAIL DETAIL

STEEL BACKED TIMBER GUIDE RAIL

NOT TO SCALE

LAND USE PERMITTING PLANS

No.	DATE	DESCRIPTION	DESIGNER	REVIEWER

SCALE: HORZ.: N.T.S.
VERT.:
DATUM: HORZ.:
VERT.:
0
GRAPHIC SCALE

FUSS & O'NEILL
146 HARTFORD ROAD
MANCHESTER, CONNECTICUT 06040
860.646.2469
www.fando.com

EVERGREEN WALK, LLC
SITE DETAILS
EVERGREEN WALK PLANNED COMMUNITY
SOUTH WINDSOR CONNECTICUT

PROJ. No.: 2000481.Y21
DATE: 01/07/2021

CD-503

File Path: J:\DWG\P2000481\Y21\Civil\Plan\Tamarack Ave\2000481Y21_DET01.dwg Layout: CD-503 Plotted: Mon, January 04, 2021 - 11:14 AM User: jdeninger
MS VIEW: LAYER STATE: Plotter: AUTOCAD PDF (GENERAL DOCUMENTATION).PC3 CTB File: FO.STB

UNITED CONCRETE PRODUCTS

Reinforced Concrete Boxes

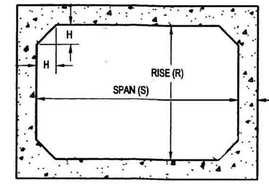

Section thru Box Culvert

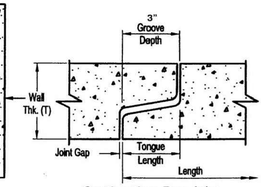

Section thru Box Joint

Standard UCP Box Culvert Weights

Rise (R) \ Span (S)	3	4	5	6	7	8	9	10	11	12
3	1500	1800	2000	2200	2390	2590	2780	3810	4060	5330
4		2000	2200	2390	2600	2800	2990	4060	4300	5700
5			2400	2600	2800	3000	3190	4300	4550	5930
6				2800	2990	3200	3390	4550	4790	6300
7					3190	3400	3590	4790	5040	6520
8						3600	3790	5040	5290	6900
9							3990	5290	5530	7110
10								5530	5780	7500
11									6025	7700
12										8100
Wall (T)	8	8	8	8	8	8	8	10	10	12
Haunch (H)	9	9	9	9	9	9	9	9	9	9

Box Dimensions will vary depending upon Equipment availability
Numbers in table are weights per foot.

NOTES:

1. Produced to current ASTM Specification and/or project specifications.
2. This drawing is not intended to show reinforcement design - either as to placement or steel area. Actual project specification or current ASTM specification will apply.
3. Contact a United Concrete representative for further details not listed on this drawing.
4. Custom sizes available upon request.

CONCRETE BOX CULVERT

NOT TO SCALE

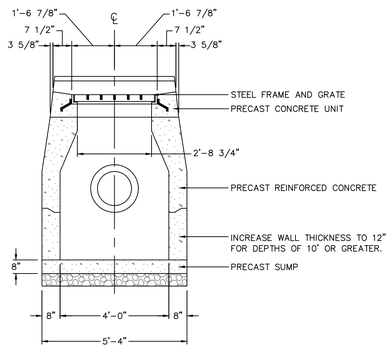

FRONT ELEVATION

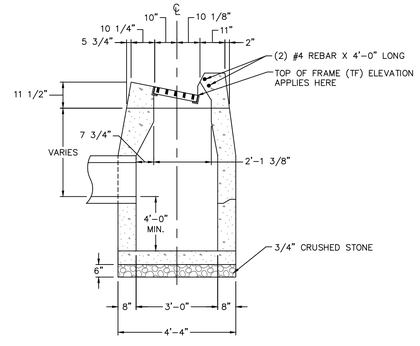

SIDE ELEVATION

TYPE "C" CATCH BASIN

NOT TO SCALE

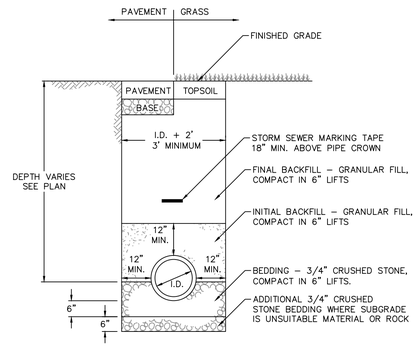

STORM SEWER TRENCH

NOT TO SCALE

LAND USE PERMITTING PLANS

No.	DATE	DESCRIPTION	DESIGNER	REVIEWER

SCALE: HORZ.: N.T.S. VERT.:
DATUM: HORZ.: VERT.:
GRAPHIC SCALE 0

FUSS & O'NEILL
146 HARTFORD ROAD
MANCHESTER, CONNECTICUT 06040
860.646.2469
www.fando.com

EVERGREEN WALK, LLC
STORMWATER MANAGEMENT DETAILS
EVERGREEN WALK PLANNED COMMUNITY
SOUTH WINDSOR CONNECTICUT

PROJ. No.: 2000481.Y21
DATE: 01/07/2021

CD-504

File Path: J:\DWG\P2000481\Y21\Civil\Plan\Tamarack Ave\2000481Y21_DET01.dwg Layout: CD-504 Plotted: Mon, January 04, 2021 - 11:15 AM User: jdeninger
MS VIEW: LAYER STATE: Plotter: AUTOCAD PDF (GENERAL DOCUMENTATION).PC3 CTB File: FO.STB

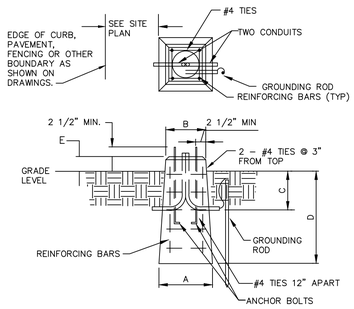

1. NUMBER, PATTERN AND SIZE OF ANCHOR BOLTS TO BE SPECIFIED BY LIGHTING POLE MANUFACTURER.
2. 4,000 PSI CONCRETE CURED FOR 7 DAYS PRIOR TO BACKFILL.
3. FORMS SHALL BE CUT AND REMOVED DOWN 12" BELOW GRADE.
4. NO. 5 REINFORCING BARS, ASTM A 615, GRADE 60 WITH MINIMUM 2" COVER.
5. EACH LIGHTING POLE SHALL BE GROUNDED WITH 8' LONG 3/4" DIAMETER COPPER GROUNDING ROD AND #6 AWG BARE COPPER CONDUCTOR. TOP OF GROUNDING ROD SHALL BE 6" BELOW GRADE.

SQUARE POLE BASE DIMENSIONS					
FIXTURE TYPE	DIMENSION "A"	DIMENSION "B"	DIMENSION "C"	DIMENSION "D"	DIMENSION "E"
Z	18"	18"	24"	54"	6"

POLE BASE DETAIL
NOT TO SCALE

NOTES:

1. REPORT POORLY DRAINING SOIL CONDITIONS TO ARCHITECT FOR HIS DIRECTION PRIOR TO PREPARATION AND PLANTING.
2. NO STOCK WRAPPED AND TIED WITH PLASTIC, PRESERVED OR NON–BIODEGRADABLE MATERIALS IS TO BE INSTALLED ON THIS JOB. REMOVE SUCH MATERIALS COMPLETELY.
3. SCARIFY ROOTBALLS OF CONTAINER STOCK BEFORE PLANTING.
4. PRUNE AS SPECIFIED AND DIRECTED BY ARCHITECT.
5. APPLY BIOSTIMULANT, WATER, MULCH, WRAP AND GUY WITHOUT DELAY.
6. SEE DETAIL X/XXX FOR STAKING AND GUYING OF TREES.
7. INSTALL EVERGREEN TREES SIMILARLY EXCEPT DELETE THREE WRAP.
8. WHERE SHRUBS ARE LOCATED OUTSIDE OF PLANTS BED INSTALL IN PITS SIMILARLY EXCEPT DELETE TREE WRAP, GUYING AND STALKING.

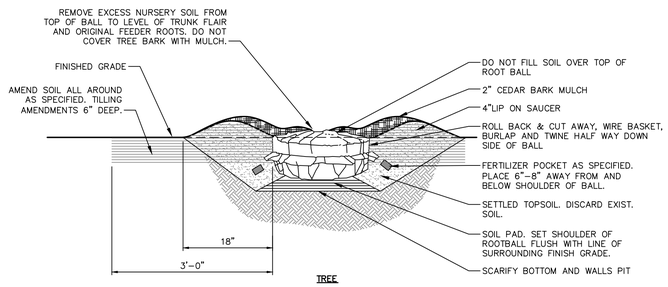

TYPICAL TREE PIT PLANTING
NOT TO SCALE

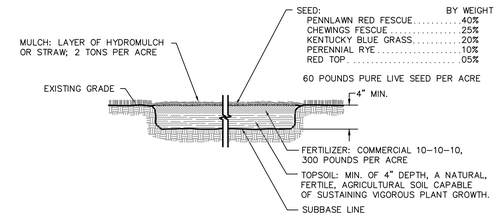

TOPSOIL, FERTILIZER, SEED & MULCH
NOT TO SCALE

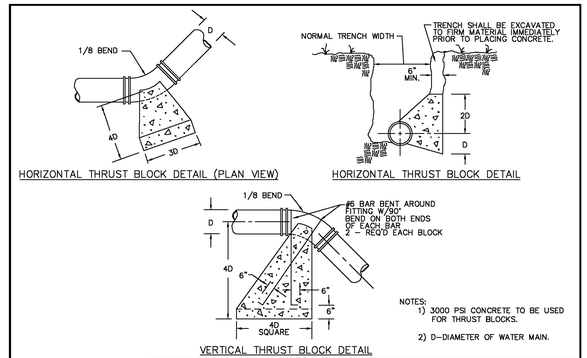

Drawn By: LRS Date: 4/2/03 Approved by:	ConnecticutWater 93 WEST MAIN STREET CLINTON, CT 06413–1600 www.ctwater.com	THRUST BLOCK DETAILS	Scale: NTS Drawing Number SD-2 BU Number – X Sheet 1 of 1

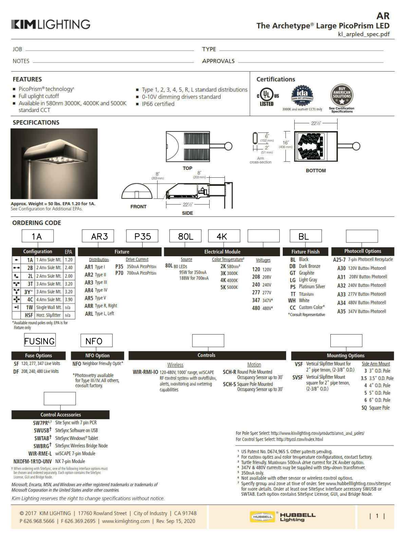

SITE LIGHTING FIXTURE DETAIL
NOT TO SCALE

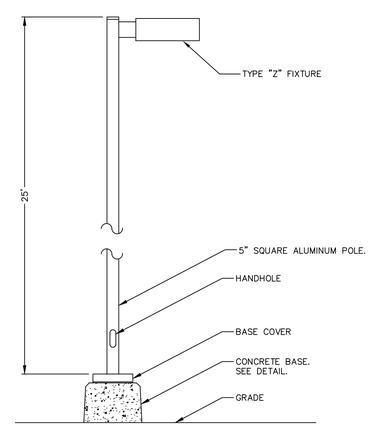

LIGHT POLE DETAIL
NOT TO SCALE

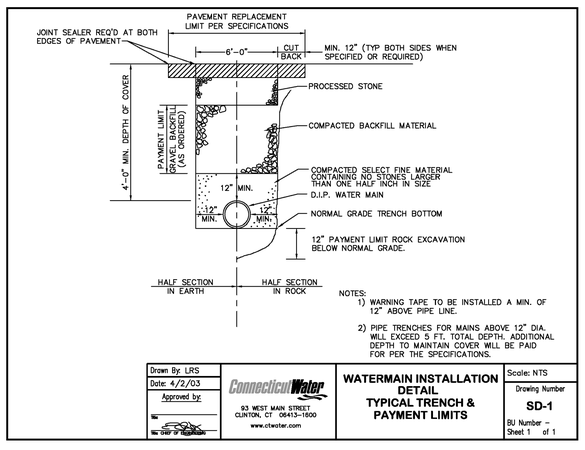

Drawn By: LRS Date: 4/2/03 Approved by:	ConnecticutWater 93 WEST MAIN STREET CLINTON, CT 06413–1600 www.ctwater.com	WATERMAIN INSTALLATION DETAIL TYPICAL TRENCH & PAYMENT LIMITS	Scale: NTS Drawing Number SD-1 BU Number – Sheet 1 of 1

LAND USE PERMITTING PLANS

No.	DATE	DESCRIPTION	DESIGNER	REVIEWER

SCALE: HORZ.: N.T.S. VERT.:
DATUM: HORZ.: VERT.:
0 GRAPHIC SCALE

FUSS & O'NEILL
146 HARTFORD ROAD
MANCHESTER, CONNECTICUT 06040
860.646.2469
www.fando.com

EVERGREEN WALK, LLC
UTILITIES & LANDSCAPE DETAILS
EVERGREEN WALK PLANNED COMMUNITY
SOUTH WINDSOR CONNECTICUT

PROJ. No.: 2000481.Y21
DATE: 01/07/2021

CD-505

File Path: J:\DWG\P2000481\Y21\Civil\Plan\Tamarack Ave\2000481Y21_DET01.dwg Layout: CD-505 Plotted: Mon, January 04, 2021 - 11:15 AM User: jdeninger Plotter: AUTOCAD PDF (GENERAL DOCUMENTATION).PC3 CTB File: FO.STB
MS VIEW: LAYER STATE: