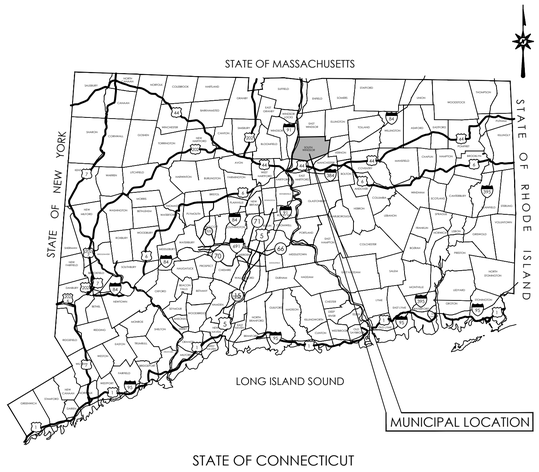

LOCATION MAP

N.T.S.

LAND DEVELOPMENT PLANS FOR THE PROPOSED DEVELOPMENT

TOWN OF SOUTH WINDSOR PLANNING AND ZONING COMMISSION

240 ELLINGTON ROAD SOUTH WINDSOR, CT

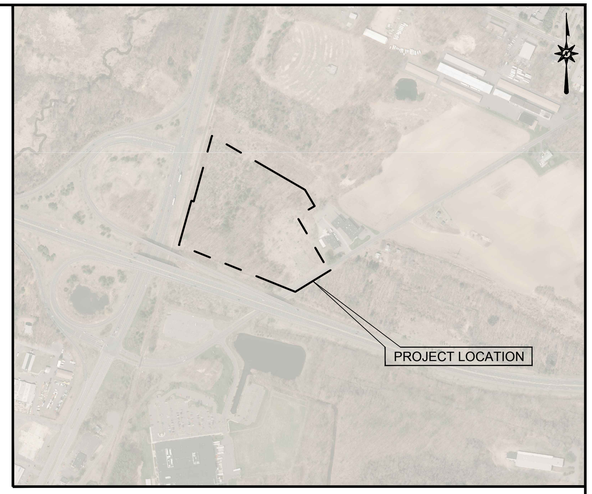

VICINITY MAP

SCALE: 1"=500'

CONTENTS

	TITLE SHEET
OEX-1	OVERALL EXISTING CONDITIONS PLAN
EX-1	EXISTING CONDITIONS PLAN
EX-2	EXISTING CONDITIONS PLAN
ODM-1	OVERALL DEMOLITION PLAN
DM-1	DEMOLITION PLAN
DM-2	DEMOLITION PLAN
OSP-1	OVERALL SITE PLAN
SP-1	SITE PLAN
SP-2	SITE PLAN
OSS-1	OVERALL SIGNAGE AND STRIPING PLAN
SS-1	SIGNAGE AND STRIPING PLAN
SS-2	SIGNAGE AND STRIPING PLAN
OGD-1	OVERALL GRADING AND DRAINAGE PLAN
GD-1	GRADING AND DRAINAGE PLAN
GD-2	GRADING AND DRAINAGE PLAN
OSU-1	OVERLL SITE UTILITIES PLAN
SU-1	SITE UTILITIES PLAN
SU-2	SITE UTILITIES PLAN
OEC-1	OVERALL SEDIMENT AND EROSION CONTROL PLAN
EC-1	SEDIMENT AND EROSION CONTROL PLAN
EC-2	SEDIMENT AND EROSION CONTROL PLAN
EC-3	SEDIMENT AND EROSION CONTROL NOTES
OLL-1	OVERALL LANDSCAPING PLAN
LL-1	LANDSCAPE PLAN
LL-2	LANDSCAPE PLAN
LL-3	LANDSCAPE NOTES AND DETAILS
ES-1	ELECTRICAL EV SITE PLAN
ES-2	ELECTRICAL EV SITE PLAN
TT-1	TRUCK TURN PLAN
GN-1	GENERAL NOTES
DN-1 THRU DN-8	DETAIL SHEETS
A5.01	EXTERIOR ELEVATIONS
A5.02	EXTERIOR ELEVATIONS

CAD FILE: CV200116601
XREF(S): XXXXXXXX

PREPARED FOR:

SCANNELL PROPERTIES LLC.
8801 RIVER CROSSING BLVD
INDIANAPOLIS, IN 46240

PREPARED BY:

BL Companies

ARCHITECTURE
ENGINEERING
ENVIRONMENTAL
LAND SURVEYING

100 CONSTITUTION PLAZA, 10TH FLOOR
HARTFORD, CONNECTICUT 06103
(860) 249-2200
(860) 249-2400 Fax

FOR PERMITTING PURPOSES ONLY
NOT RELEASED FOR CONSTRUCTION

STATE OF CONNECTICUT
MATTHEW J. BRUNO
No. 30356
LICENSED
PROFESSIONAL ENGINEER

APPLICANT:

SCANNELL PROPERTIES LLC.
8801 RIVER CROSSING BLVD
INDIANAPOLIS, IN 46240
(763) 331-8853

OWNER:

SCANNELL PROPERTIES LLC.
8801 RIVER CROSSING BLVD
INDIANAPOLIS, IN 46240
(763) 331-8853

DATES

ISSUE DATE: NOVEMBER 20, 2020

© 2020 BL COMPANIES, INC. THESE DRAWINGS SHALL NOT BE UTILIZED BY ANY PERSON, FIRM OR CORPORATION WITHOUT THE SPECIFIC WRITTEN PERMISSION OF BL COMPANIES.

LEGEND

- Property Line
- Easement Line
- Fence

NOTES

THE EXISTING CONDITIONS MAP IS A COMPILATION OF BEST AVAILABLE MAPPING INCLUDING PREVIOUSLY APPROVED AND BUILT DESIGN PLANS AND TOWN DATA.

FOR PERMITTING PURPOSES ONLY
NOT RELEASED FOR CONSTRUCTION

GRAPHIC SCALE
60 30 0 60
SCALE IN FEET

Architecture
Engineering
Environmental
Land Surveying

BL Companies

355 Research Parkway
Meriden, CT 06450
(203) 630-1406
(203) 630-2615 Fax

STATE OF CONNECTICUT
MATTHEW J. BUTCH
No. 20288
LICENSED
PROFESSIONAL ENGINEER

PROPOSED WAREHOUSE

240 ELLINGTON ROAD
SOUTH WINDSOR, HARTFORD COUNTY, CONNECTICUT

REVISIONS

No.	Date	Desc.

Designed	A.J.S.
Drawn	S.E.L.
Reviewed	
Scale	1"=60'
Project No.	2001166
Date	11/20/2020
CAD File: EX200116601	

Title

OVERALL EXISTING CONDITIONS PLAN

Sheet No.

OEX-1

Xref (s) : BD200116601 ; XC200116601 ; XC200116603

11/20/2020, \\BRALLC\J:\JOBS\2\100\001\WORK\BD\01\WP\OEX001.MAX\BRVG\OEX-1.DWG\OEX-1 24X36.MSC

© 2020 BL COMPANIES, INC. THESE DRAWINGS SHALL NOT BE UTILIZED BY ANY PERSON, FIRM OR CORPORATION WITHOUT THE SPECIFIC WRITTEN PERMISSION OF BL COMPANIES.

LEGEND

- Property Line
- Easement Line
- Fence

FOR PERMITTING PURPOSES ONLY
NOT RELEASED FOR CONSTRUCTION

Architecture
Engineering
Environmental
Land Surveying

BL Companies

355 Research Parkway
Meriden, CT 06450
(203) 630-1406
(203) 630-2615 Fax

STATE OF CONNECTICUT
MATTHEW J. BUTKUS
No. 25384
LICENSED
PROFESSIONAL ENGINEER

PROPOSED WAREHOUSE

240 ELLINGTON ROAD
SOUTH WINDSOR, HARTFORD COUNTY, CONNECTICUT

REVISIONS

No.	Date	Desc.

Designed	A.J.S.
Drawn	S.E.L.
Reviewed	
Scale	1"=40'
Project No.	2001166
Date	11/20/2020
CAD File: EX200116601	

Title

EXISTING CONDITIONS PLAN

Sheet No.

EX-1

Xref (s) : BD200116601 ; XC200116601

11/20/2020, IRFRALLI, G:\CREDO\WORK\2001166\WWW\EX2001166D.DWG,EX-1 24X36,40SC

© 2020 BL COMPANIES, INC. THESE DRAWINGS SHALL NOT BE UTILIZED BY ANY PERSON, FIRM OR CORPORATION WITHOUT THE SPECIFIC WRITTEN PERMISSION OF BL COMPANIES.

LEGEND

- Property Line
- Easement Line
- Fence

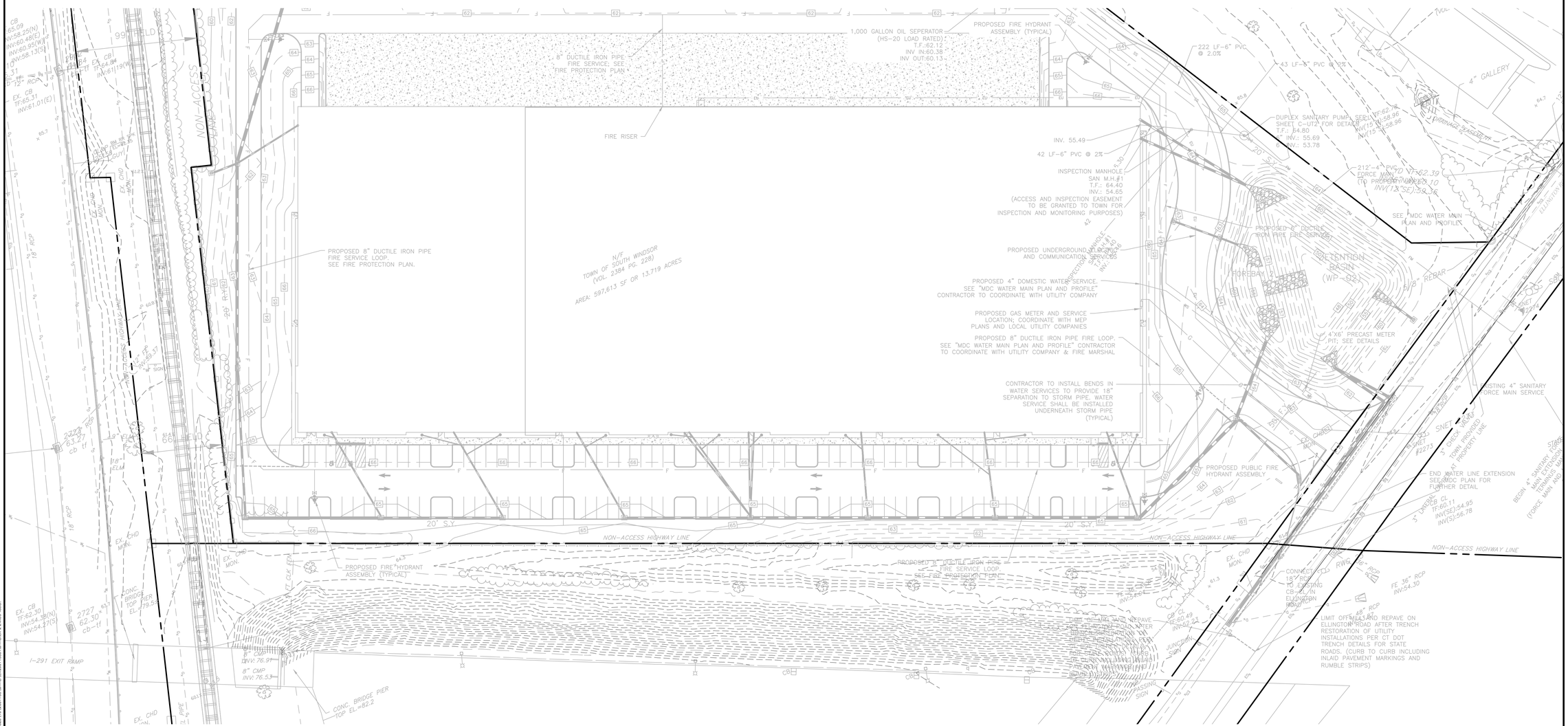

FOR PERMITTING PURPOSES ONLY
NOT RELEASED FOR CONSTRUCTION

Architecture
Engineering
Environmental
Land Surveying

BL Companies

355 Research Parkway
Meriden, CT 06450
(203) 630-1406
(203) 630-2615 Fax

STATE OF CONNECTICUT
MATTHEW T. BUTCH
No. 20288
LICENSED
PROFESSIONAL ENGINEER

PROPOSED WAREHOUSE

240 ELLINGTON ROAD
SOUTH WINDSOR, HARTFORD COUNTY, CONNECTICUT

REVISIONS

No.	Date	Desc.

Designed	A.J.S.
Drawn	S.E.L.
Reviewed	
Scale	1"=40'
Project No.	2001166
Date	11/20/2020
CAD File: EX200116601	

Title

EXISTING CONDITIONS PLAN

Sheet No.

EX-2

Xref (s) : B020011601 ; XC200116601 ; XC200116601

11/20/2020, tfitzwalter, U:\CADGEN\Projects\2001166\Drawings\EX2001166.dwg\EX-2 EXISTING 40SC

© 2020 BL COMPANIES, INC. THESE DRAWINGS SHALL NOT BE UTILIZED BY ANY PERSON, FIRM OR CORPORATION WITHOUT THE SPECIFIC WRITTEN PERMISSION OF BL COMPANIES.

DEMOLITION LEGEND:

	PROPERTY LINE
LOD	LIMIT OF DISTURBANCE LINE AND CONTRACT LIMIT LINE
	SAWCUT LINE
SF SF	SILT FENCE
XXXXXXXXXXXXXXXXXXXX	REMOVE AND DISPOSE OF UNDERGROUND STORMWATER OR UTILITY PIPE, CURB, FENCING, WALLS, OVERHEAD WIRES, ETC.
	REMOVE AND DISPOSE OF LIGHT POLE, SIGN, PIPING, UTILITY STRUCTURE, APPURTENANCE, FIXTURE, TREE, AND/OR TREE STUMP ETC.
	REMOVE AND DISPOSE OF TREE, SHRUB, AND/OR STUMP (TYP.)
	REMOVE AND DISPOSE OF EXISTING CONCRETE PADS AND/OR CONCRETE SIDEWALKS
	REMOVE AND DISPOSE OF EXISTING BITUMINOUS CONCRETE PAVEMENT STRUCTURE
	LIMIT OF TREE AND VEGETATION CLEARING

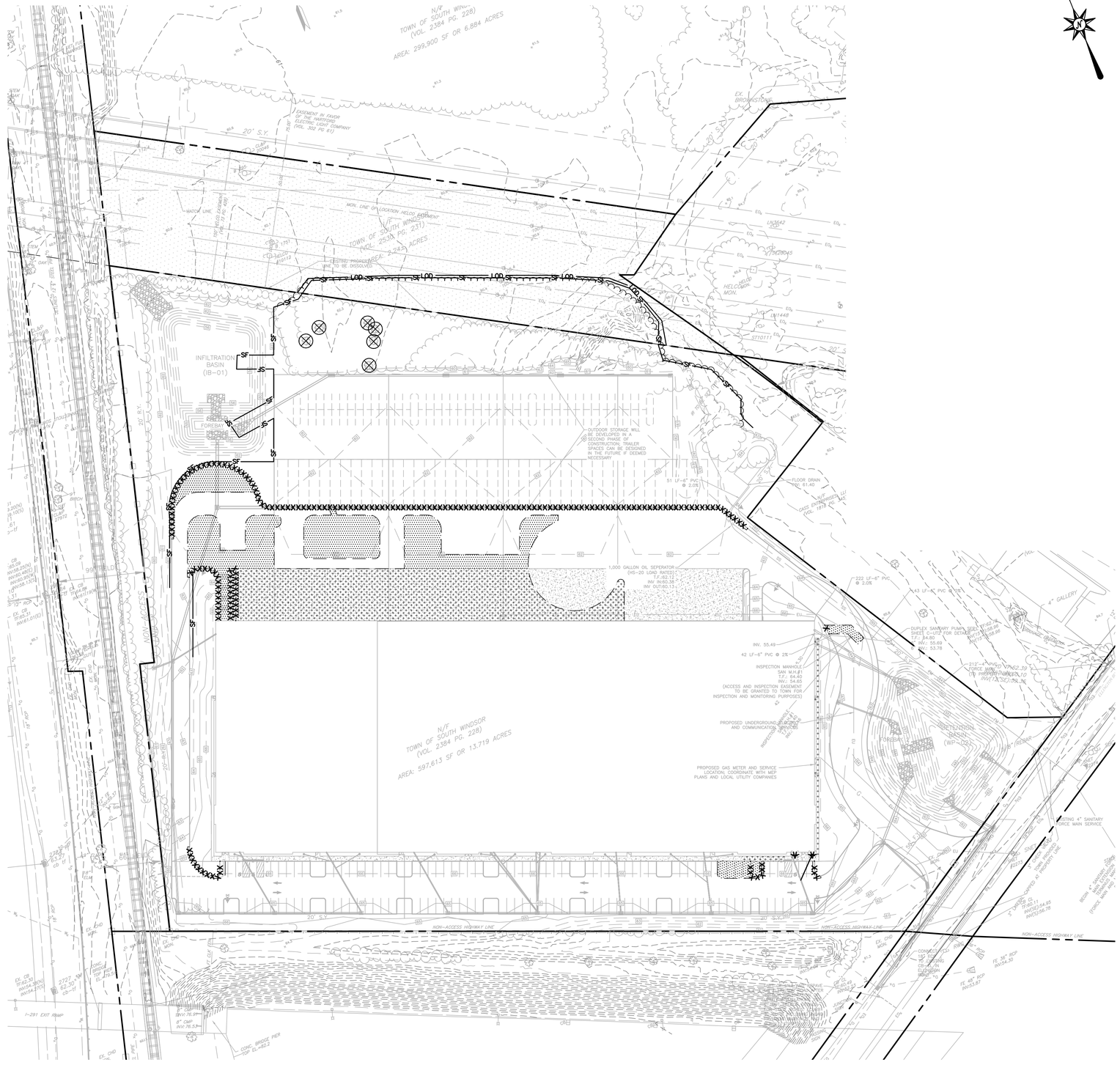

FOR PERMITTING PURPOSES ONLY
NOT RELEASED FOR CONSTRUCTION

GRAPHIC SCALE
60 30 0 60
SCALE IN FEET

Architecture
Engineering
Environmental
Land Surveying

BL Companies

355 Research Parkway
Meriden, CT 06450
(203) 630-1406
(203) 630-2615 Fax

STATE OF CONNECTICUT
MATTHEW T. BUTCH
No. 20594
LICENSED
PROFESSIONAL ENGINEER

PROPOSED WAREHOUSE
240 ELLINGTON ROAD
SOUTH WINDSOR, HARTFORD COUNTY, CONNECTICUT

REVISIONS		
No.	Date	Desc.

Designed	A.J.S.
Drawn	S.E.L.
Reviewed	
Scale	1"=60'
Project No.	2001166
Date	11/20/2020
CAD File: DM200116601	

Title

OVERALL DEMOLITION PLAN

Sheet No.

ODM-1

Xref (s): : B02001166\1 ; XC200116601 ; XC200116602 ; XC200116603 ; XC200116604 ; XC200116605 ; XC200116606

© 2020 BL COMPANIES, INC. THESE DRAWINGS SHALL NOT BE UTILIZED BY ANY PERSON, FIRM OR CORPORATION WITHOUT THE SPECIFIC WRITTEN PERMISSION OF BL COMPANIES.

DEMOLITION LEGEND:

	PROPERTY LINE
LOD	LIMIT OF DISTURBANCE LINE AND CONTRACT LIMIT LINE
	SAWCUT LINE
SF SF	SILT FENCE
XXXXXXXXXXXXXXXXXXXX	REMOVE AND DISPOSE OF UNDERGROUND STORMWATER OR UTILITY PIPE, CURB, FENCING, WALLS, OVERHEAD WIRES, ETC.
	REMOVE AND DISPOSE OF LIGHT POLE, SIGN, PIPING, UTILITY STRUCTURE, APPURTENANCE, FIXTURE, TREE, AND/OR TREE STUMP ETC.
	REMOVE AND DISPOSE OF TREE, SHRUB, AND/OR STUMP (TYP.)
	REMOVE AND DISPOSE OF EXISTING CONCRETE PADS AND/OR CONCRETE SIDEWALKS
	REMOVE AND DISPOSE OF EXISTING BITUMINOUS CONCRETE PAVEMENT STRUCTURE
	LIMIT OF TREE AND VEGETATION CLEARING

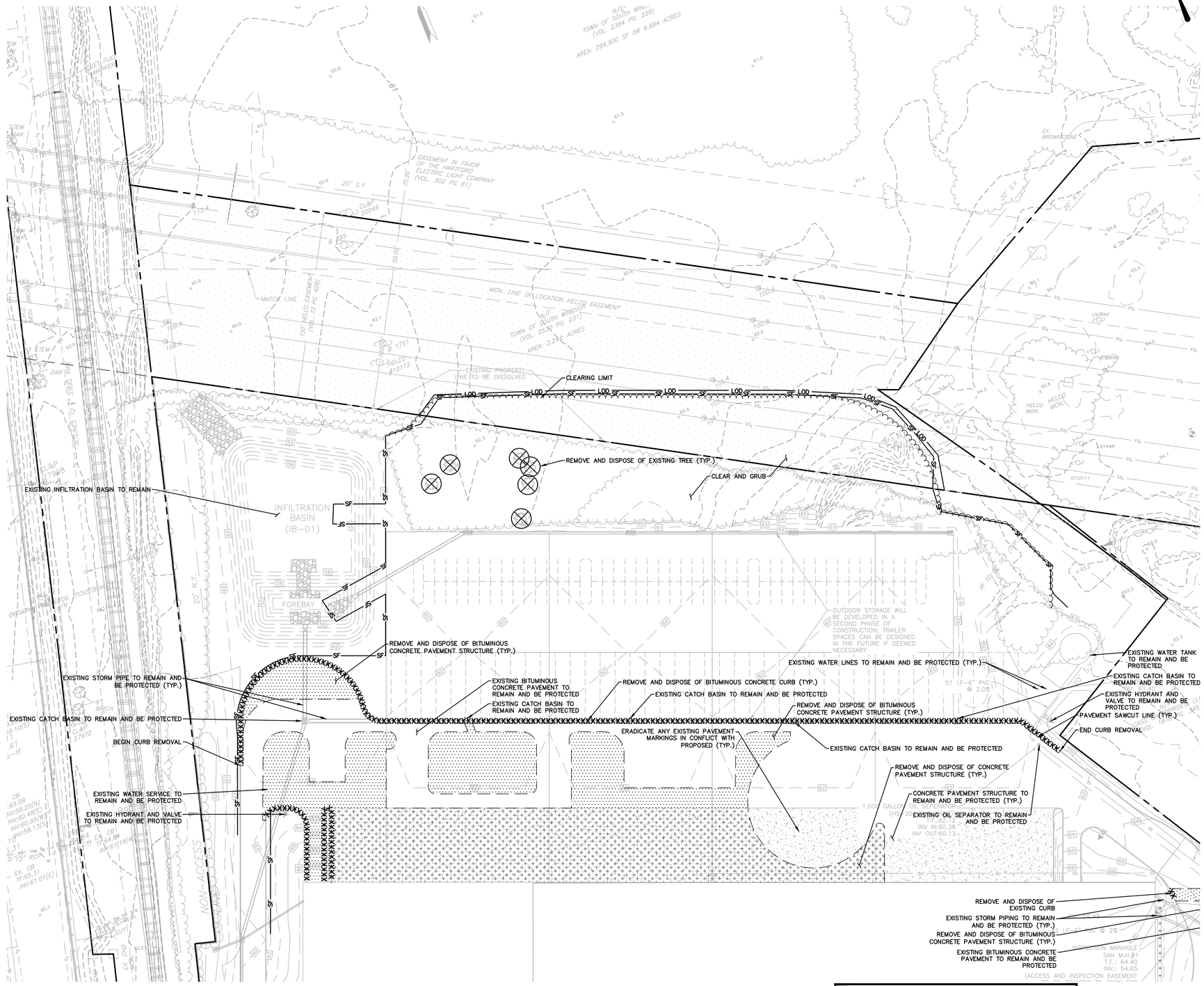

FOR PERMITTING PURPOSES ONLY NOT RELEASED FOR CONSTRUCTION

Architecture
Engineering
Environmental
Land Surveying

BL Companies

355 Research Parkway
Meriden, CT 06450
(203) 630-1406
(203) 630-2615 Fax

STATE OF CONNECTICUT
MATTHEW T. BUTCH
No. 22584
LICENSED
PROFESSIONAL ENGINEER

PROPOSED WAREHOUSE

240 ELLINGTON ROAD
SOUTH WINDSOR, HARTFORD COUNTY, CONNECTICUT

REVISIONS

No.	Date	Desc.

Designed	A.J.S.
Drawn	S.E.L.
Reviewed	
Scale	1"=40'
Project No.	2001166
Date	11/20/2020

CAD File: DM200116601

Title

DEMOLITION PLAN

Sheet No.

DM-1

Xref (s): : BX200116601 : XX200116601 : XC200116601 : XC200116605 : XC200116606

11/20/2020, YRIGHALL G:\CADD\2001\2001166\DWGS\DM200116601.DWG,DM-1, 24X36, ARCH

© 2020 BL COMPANIES, INC. THESE DRAWINGS SHALL NOT BE UTILIZED BY ANY PERSON, FIRM OR CORPORATION WITHOUT THE SPECIFIC WRITTEN PERMISSION OF BL COMPANIES.

DEMOLITION LEGEND:

	PROPERTY LINE
LOD	LIMIT OF DISTURBANCE LINE AND CONTRACT LIMIT LINE
	SAWCUT LINE
SF SF	SILT FENCE
XXXXXXXXXXXXXXXXXXXX	REMOVE AND DISPOSE OF UNDERGROUND STORMWATER OR UTILITY PIPE, CURB, FENCING, WALLS, OVERHEAD WIRES, ETC.
	REMOVE AND DISPOSE OF LIGHT POLE, SIGN, PIPING, UTILITY STRUCTURE, APPURTENANCE, FIXTURE, TREE, AND/OR TREE STUMP ETC.
	REMOVE AND DISPOSE OF TREE, SHRUB, AND/OR STUMP (TYP.)
	REMOVE AND DISPOSE OF EXISTING CONCRETE PADS AND/OR CONCRETE SIDEWALKS
	REMOVE AND DISPOSE OF EXISTING BITUMINOUS CONCRETE PAVEMENT STRUCTURE
	LIMIT OF TREE AND VEGETATION CLEARING

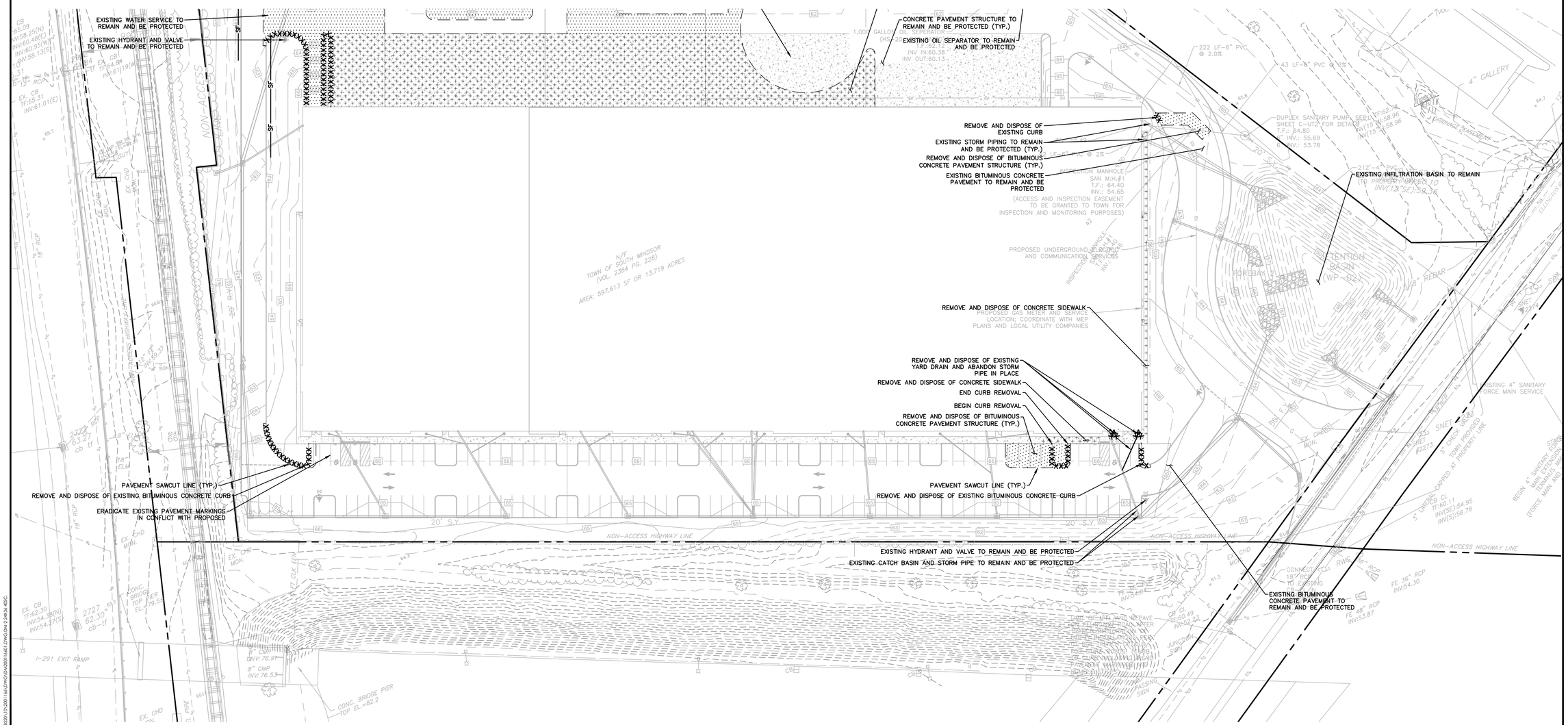

FOR PERMITTING PURPOSES ONLY
NOT RELEASED FOR CONSTRUCTION

GRAPHIC SCALE
40 20 0 40
SCALE IN FEET

Architecture
Engineering
Environmental
Land Surveying

BL Companies

355 Research Parkway
Meriden, CT 06450
(203) 630-1406
(203) 630-2615 Fax

STATE OF CONNECTICUT
MATTHEW T. BUTCH
No. 20288
LICENSED
PROFESSIONAL ENGINEER

PROPOSED WAREHOUSE

240 ELLINGTON ROAD
SOUTH WINDSOR, HARTFORD COUNTY, CONNECTICUT

REVISIONS

No.	Date	Desc.

Designed	A.J.S.
Drawn	S.E.L.
Reviewed	
Scale	1"=40'
Project No.	2001166
Date	11/20/2020
CAD File: DM200116601	

Title

DEMOLITION PLAN

Sheet No.

DM-2

Xref (s): : BD200116601 : XC200116601 : XC200116605 : XC200116606

L:\PROJECTS_FINALS_ECS\DESIGN\DWGS\01-MAIN\DWG\DM-DEMO\01-MAIN\DWG\DM-2-240 ELL.DWG

© 2020 BL COMPANIES, INC. THESE DRAWINGS SHALL NOT BE UTILIZED BY ANY PERSON, FIRM OR CORPORATION WITHOUT THE SPECIFIC WRITTEN PERMISSION OF BL COMPANIES.

ZONING INFORMATION

LOCATION: SOUTH WINDSOR, HARTFORD COUNTY				
ZONE: CD (I-291 CORRIDOR DEVELOPMENT ZONE)				
USE: WAREHOUSE (PERMITTED USE)				
ITEM #	ITEM	REQUIREMENTS	PROPOSED	VARIANCE
1	MINIMUM LOT AREA	5 AC	15.96 AC	NO
2	MINIMUM LOT FRONTAGE	300 FEET	304.16 FEET	NO
3	MINIMUM FRONT SETBACK	50 FEET	139.9 FEET	NO
4	MINIMUM SIDE SETBACK	20 FEET	47 FEET	NO
5	MINIMUM REAR SETBACK	20 FEET	35 FEET	NO
6	MAXIMUM BUILDING HEIGHT	5 STORIES; 60 FEET	1 STORY; 41.5 FEET	NO
7	MAXIMUM IMPERVIOUS COVERAGE	65 PERCENT	63.1 PERCENT	NO
8	MINIMUM INTERIOR LANDSCAPING	10 PERCENT	10.8 PERCENT	NO
9	MAXIMUM BUILDING COVERAGE	25 PERCENT	26.2 PERCENT	NO*

*PREVIOUSLY APPROVED

PARKING INFORMATION

ITEM #	ITEM	REQUIREMENTS	PROPOSED	VARIANCE
1	BUILDING SIZE	N/A	182,000 S.F.	NO
2	PARKING REQUIRED	WAREHOUSE: 1 SPACE PER EVERY 1,250 S.F. OF GROSS FLOOR AREA (163,952 S.F.) =132 SPACES OFFICE: 1 SPACE PER EVERY 1,000 S.F. OF GROSS FLOOR AREA (18,048 S.F.) = 82 SPACES TOTAL REQUIRED SPACES= 214 SPACES	384 TOTAL SPACES– 9'X18': 129 SPACES 11'X27': 255 SPACES	NO
3	MINIMUM HANDICAPPED PARKING SPACES REQUIRED	5 SPACES	6 SPACES	NO
4	MINIMUM PARKING DIMENSIONS	9 FEET X 18 FEET	9 FEET X 18 FEET	NO
5	MINIMUM LOADING DIMENSIONS	N/A	13.5 FEET X 60 FEET	NO
6	MINIMUM AISLE WIDTH	24 FEET – TWO WAY 24 FEET – ONE–WAY (PARKING BOTH SIDES) 18 FEET – ONE–WAY	24 FEET – TWO–WAY 18 FEET – ONE–WAY	NO
7	MINIMUM FRONT SETBACK	50 FEET	105.8 FEET	NO
8	MINIMUM SIDE SETBACK	20 FEET	20.2 FEET	NO
9	MINIMUM REAR SETBACK	20 FEET	92.7 FEET	NO

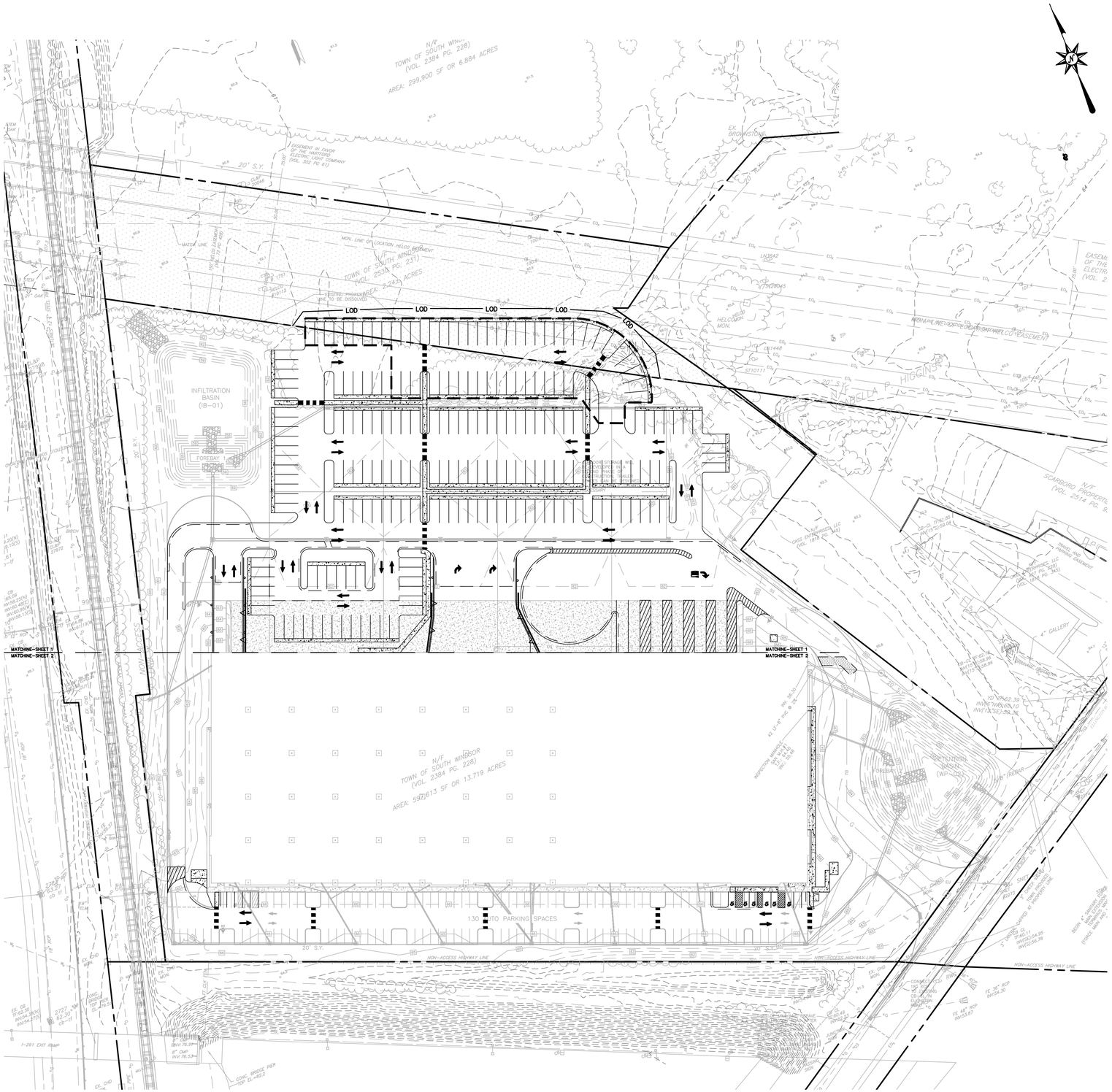

FOR PERMITTING PURPOSES ONLY
NOT RELEASED FOR CONSTRUCTION

GRAPHIC SCALE
60 30 0 60
SCALE IN FEET

Architecture
Engineering
Environmental
Land Surveying
BL Companies
355 Research Parkway
Meriden, CT 06450
(203) 630-1406
(203) 630-2615 Fax

STATE OF CONNECTICUT
MATTHEW J. BUDNY
No. 20288
LICENSED
PROFESSIONAL ENGINEER

PROPOSED WAREHOUSE
240 ELLINGTON ROAD
SOUTH WINDSOR, HARTFORD COUNTY, CONNECTICUT

REVISIONS		
No.	Date	Desc.

Designed	A.J.S.
Drawn	S.E.L.
Reviewed	
Scale	1"=60'
Project No.	2001166
Date	11/20/2020
CAD File: SP200116601	

Title
OVERALL SITE PLAN

Sheet No.
OSP-1

Xref (s): : BD200116601 : XC200116601 : XZ200116601

11/20/2020, YRIGALLE, G:\JOBS\2001\01601\AUTO\SP\01601\01601 DWG\OSP-1 2-BOX.DWG
© 2020 BL COMPANIES, INC. THESE DRAWINGS SHALL NOT BE UTILIZED BY ANY PERSON, FIRM OR CORPORATION WITHOUT THE SPECIFIC WRITTEN PERMISSION OF BL COMPANIES.

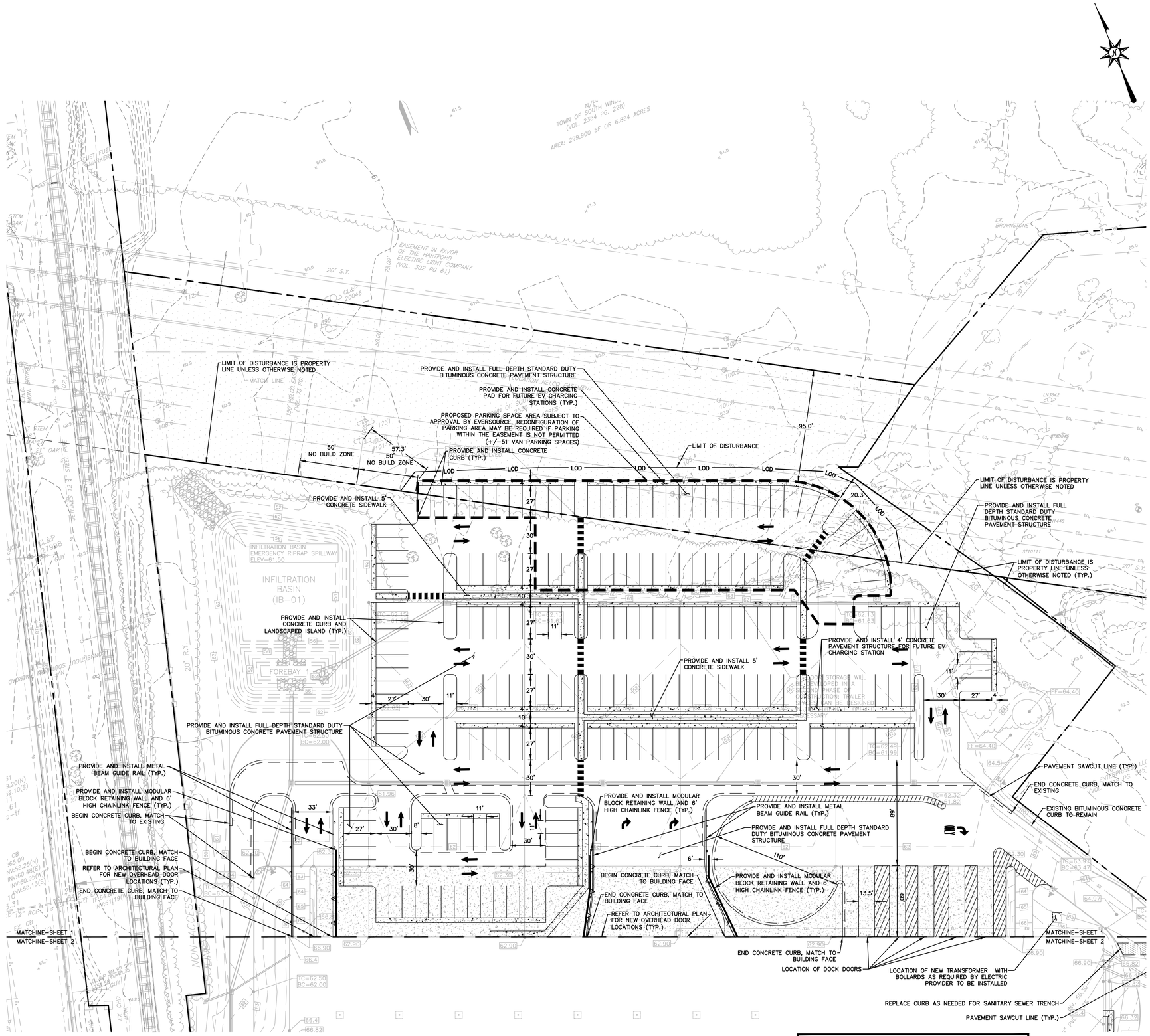

FOR PERMITTING PURPOSES ONLY
NOT RELEASED FOR CONSTRUCTION

Architecture
Engineering
Environmental
Land Surveying

BL Companies

355 Research Parkway
Meriden, CT 06450
(203) 630-1406
(203) 630-2615 Fax

STATE OF CONNECTICUT
MATTHEW T. BUTCH
No. 22584
LICENSED
PROFESSIONAL ENGINEER

PROPOSED WAREHOUSE

240 ELLINGTON ROAD
SOUTH WINDSOR, HARTFORD COUNTY, CONNECTICUT

REVISIONS

No.	Date	Desc.

Designed	A.J.S.
Drawn	S.E.L.
Reviewed	
Scale	1"=40'
Project No.	2001166
Date	11/20/2020
CAD File: SP200116601	

Title

SITE PLAN

Sheet No.

SP-1

Xref (s) : BX200116601 ; XC200116601 ; XZ200116601

11/20/2020, HTRAUL: G:\JOBS\01\2001166\DWG\SP\2001166T.DWG,SP-1 24X36 ARCH

© 2020 BL COMPANIES, INC. THESE DRAWINGS SHALL NOT BE UTILIZED BY ANY PERSON, FIRM OR CORPORATION WITHOUT THE SPECIFIC WRITTEN PERMISSION OF BL COMPANIES.

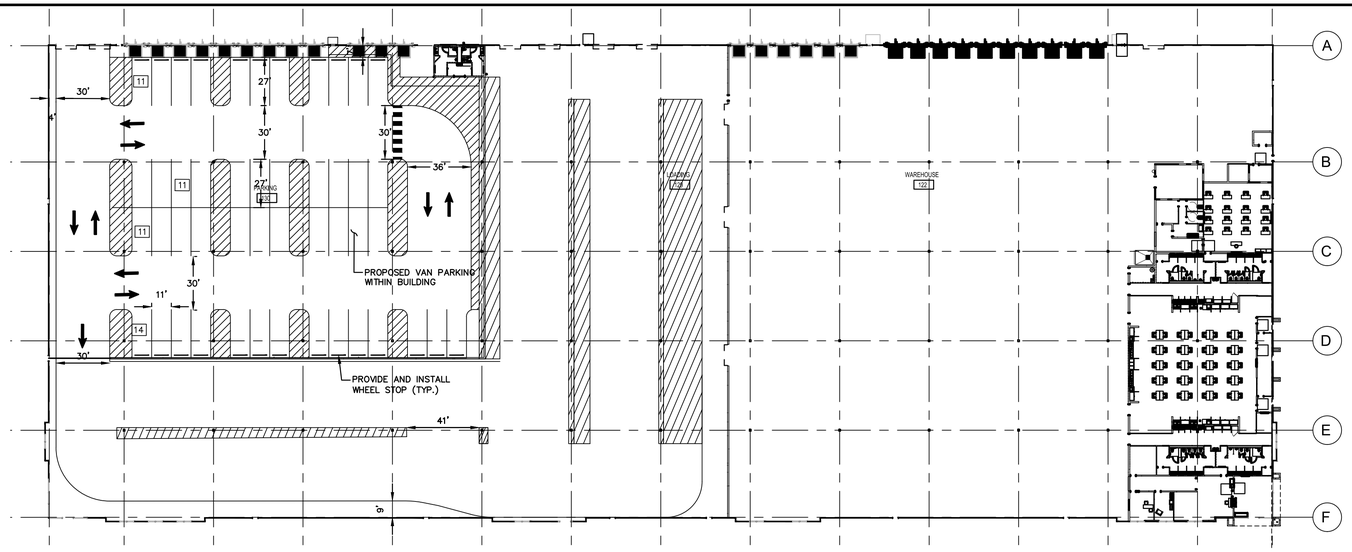

INTERIOR BUILDING PARKING INSET

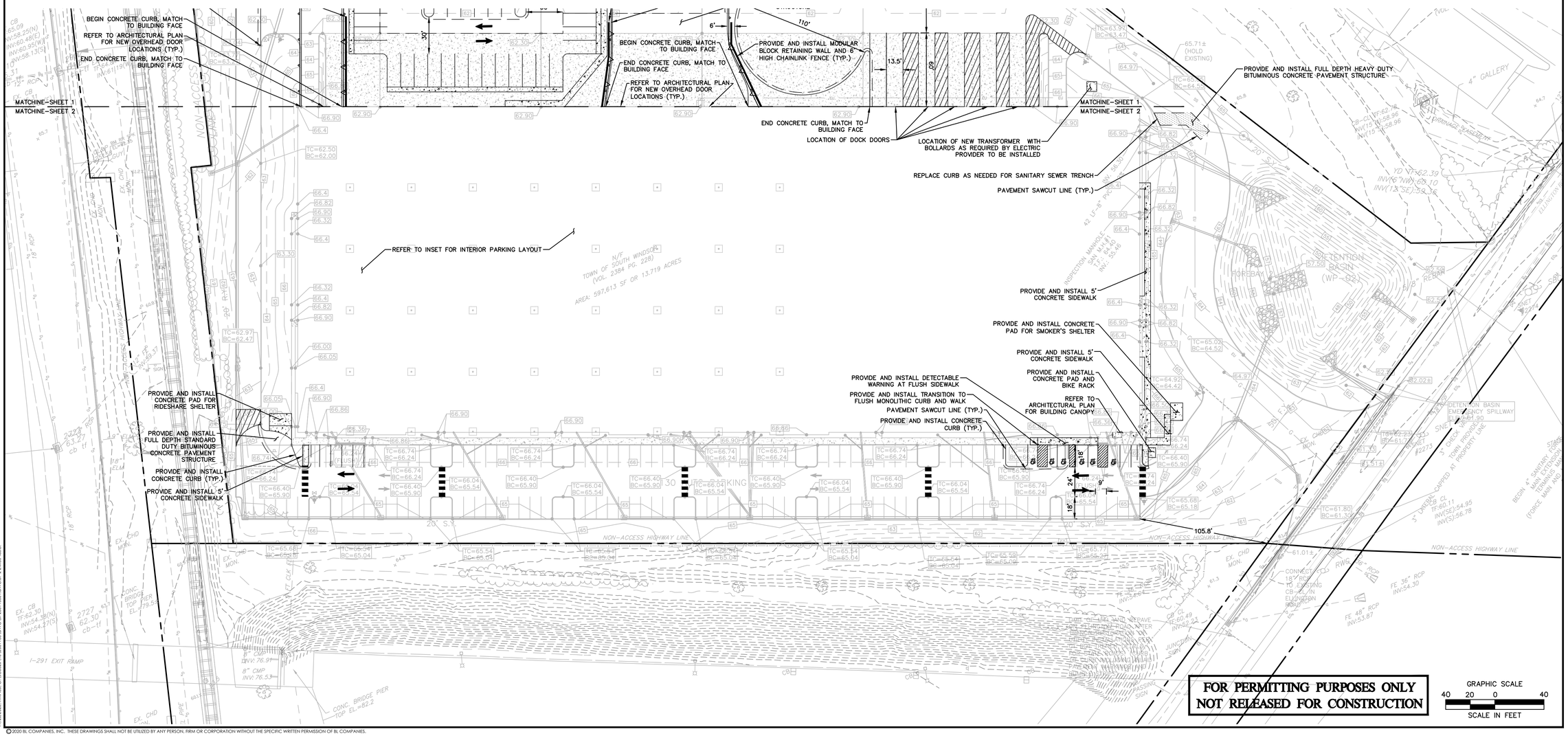

© 2020 BL COMPANIES, INC. THESE DRAWINGS SHALL NOT BE UTILIZED BY ANY PERSON, FIRM OR CORPORATION WITHOUT THE SPECIFIC WRITTEN PERMISSION OF BL COMPANIES.

Architecture
Engineering
Environmental
Land Surveying
BL Companies
355 Research Parkway
Meriden, CT 06450
(203) 630-1406
(203) 630-2615 Fax

STATE OF CONNECTICUT
MATTHEW T. BUTCH
LICENSED PROFESSIONAL ENGINEER

PROPOSED WAREHOUSE
240 ELLINGTON ROAD
SOUTH WINDSOR, HARTFORD COUNTY, CONNECTICUT

REVISIONS

No.	Date	Desc.

Designed	A.J.S.
Drawn	S.E.L.
Reviewed	
Scale	1"=40'
Project No.	2001166
Date	11/20/2020
CAD File: SP200116601	

Title
SITE PLAN

Sheet No.
SP-2

Xref (s): : BD200116601 ; XC200116601 ; X2200116601

11/20/2020, HRAULI, G:\JOBS2011\2001166\DWG\SP200116601.DWG,SP-2,24X36,40SC

SIGN LEGEND

A	STOP SIGN	(S-1)
B	DO NOT ENTER SIGN	(S-2)
C	SPEED LIMIT, 5 MPH SIGN	(S-3)
D	SPEED BUMP SIGN W/ 5 MPH PLACARD SIGN	(S-3-MOD)
E	SPEED LIMIT SIGN, 10 MPH SIGN	(S-4)
~~F~~	~~SPEED HUMP SIGN W/ 10 MPH PLACARD SIGN~~	~~(S-4-MOD)~~
G	PEDESTRIAN CROSSING, LEFT ARROW SIGN	(S-5(L))
H	PEDESTRIAN CROSSING, RIGHT ARROW SIGN	(S-5(R))
~~I~~	~~ONE WAY, LEFT ARROW SIGN~~	~~(S-7(L))~~
~~J~~	~~ONE WAY, RIGHT ARROW SIGN~~	~~(S-7(R))~~
~~K~~	~~LEFT TURN ONLY SIGN~~	~~(S-9(L))~~
L	RIGHT TURN ONLY SIGN	(S-9(R))
~~M~~	~~NO LEFT TURN SIGN~~	~~(S-11(L))~~
~~N~~	~~NO RIGHT TURN SIGN~~	~~(S-11(R))~~
~~O~~	~~NO U TURN SIGN~~	~~(S-12)~~
~~P~~	~~TRUCK PROHIBITED SIGN~~	~~(S-13)~~
~~Q~~	~~NO PARKING SIGN~~	~~(S-14)~~
R	CONNECTICUT ACCESSIBLE CAR PARKING SIGN	(S-15)
S	CONNECTICUT ACCESSIBLE VAN PARKING SIGN	(S-16)
~~T~~	~~NO TRESPASSING SIGN~~	~~(S-17)~~
~~U~~	~~NO PARKING FIRE LANE SIGN~~	~~(S-21)~~

TENANT SIGN LEGEND

AA	ADDRESS SIGN	(AS-1)
AB	TRUCK/VISITOR USHER SIGN	(AS-2)
AC	YARD RULES SIGN	(AS-5)
~~AD~~	~~TRUCK ENTRANCE SIGN~~	~~(AS-6)~~
~~AE~~	~~DRIVER'S LOUNGE SIGN~~	~~(AS-7)~~
~~AF~~	~~RECEIVING DRIVER ENTRANCE SIGN~~	~~(AS-8)~~
~~AG~~	~~SHIPPING DRIVER ENTRANCE SIGN~~	~~(AS-9)~~
~~AH~~	~~TRACTOR PARKING SIGN~~	~~(AS-10)~~
~~AI~~	~~TRAILER 3FT FROM WALL SIGN~~	~~(AS-12)~~
AJ	NO ENTRANCE SIGN	(AS-13)
~~AK~~	~~NO EXIT SIGN~~	~~(AS-14)~~
~~AL~~	~~EXIT SIGN – LEFT~~	~~(AS-15(L))~~
AM	EXIT SIGN – RIGHT	(AS-15(R))
~~AN~~	~~EXIT SIGN – STRAIGHT~~	~~(AS-15(S))~~
~~AO~~	~~WAYFINDING SIGN~~	~~(AS-16 (2))~~
~~AP~~	~~WAYFINDING SIGN~~	~~(AS-16 (3))~~
AQ	DOCK NUMBER SIGN (REFER TO ARCH. PLAN)	(AS-20)
AR	DROP-OFF AND PICK-UP SIGN	(AS-22)
~~AS~~	~~ASSOCIATE OF THE MONTH SIGN~~	~~(AS-23)~~
~~AT~~	~~VISITOR PARKING SIGN~~	~~(AS-24)~~
~~AU~~	~~VENDOR PARKING SIGN~~	~~(AS-25)~~
AW	MUSTER AREA SIGN	(AS-26)
~~AX~~	~~MOTORCYCLE PARKING SIGN~~	~~(AS-29)~~
~~AY~~	~~NON-SMOKING AREA SIGN~~	~~(AS-30)~~
AZ	CUSTOMER PARKING SIGN	(AS-31)
~~BA~~	~~NO IDLING~~	~~(AS-33)~~
~~BB~~	~~TURN OFF ENGINE~~	~~(AS-35)~~
~~BC~~	~~TRAILER PARKING SIGN~~	~~(AS-38)~~

PAVEMENT GRAPHIC/SITE LEGEND

1	VEHICLE STOP LINE	(PG-1)
2	STRAIGHT ARROW	(PG-5)
~~3~~	~~LEFT TURN ARROW~~	~~(PG-6(L))~~
4	RIGHT TURN ARROW	(PG-6(R))
~~5~~	~~STRAIGHT OR LEFT TURN ARROW~~	~~(PG-7(L))~~
~~6~~	~~STRAIGHT OR RIGHT TURN ARROW~~	~~(PG-7(R))~~
~~7~~	~~LEFT OR RIGHT TURN ARROWS~~	~~(PG-8)~~
~~8~~	~~LEFT, STRAIGHT, OR RIGHT TURN ARROWS~~	~~(PG-9)~~
9	18" STRIPING OUTLINE AND FILL AT 45 DEGREES	(PG-10)
10	12" STRIPING OUTLINE AND HATCH @ 36" O.C. (WHITE)	(PG-11)
~~11~~	~~12" STRIPING OUTLINE AND HATCH @ 36" O.C. (YEL.)~~	~~(PG-12)~~
12	TRAILER SPACE NUMBERING	(PG-14)
~~13~~	~~SPEED HUMP~~	~~(PG-15)~~
14	SPEED BUMP (BITUMINOUS CONCRETE)	(PG-16)
15	SPEED BUMP (RUBBER)	(PG-16)
16	CONNECTICUT ACCESSIBLE CAR PARKING	(PG-17)
17	CONNECTICUT ACCESSIBLE VAN PARKING	(PG-18)
18	PEDESTRIAN TABLE	(PG-20)
~~19~~	~~EMPTY TRAILER SLIP~~	~~(PG-21)~~
~~20~~	~~TRACTOR DOCK PARKING~~	~~(PG-22)~~
~~21~~	~~JACK STAND AREA~~	~~(PG-23)~~
22	4" WIDE ORANGE WARNING LINE	(PG-24)
23	4" WIDE YELLOW STRIPE LINE	()
24	4" WIDE DOUBLE YELLOW STRIPE LINE	()
25	4" WIDE WHITE STRIPE LINE	()
26	4" WIDE WHITE DOUBLE PARKING STRIPING	()
~~27~~	~~GUIDERAIL~~	~~()~~
~~28~~	~~CONCRETE TRAFFIC BARRIER (TYPE 2)~~	~~()~~

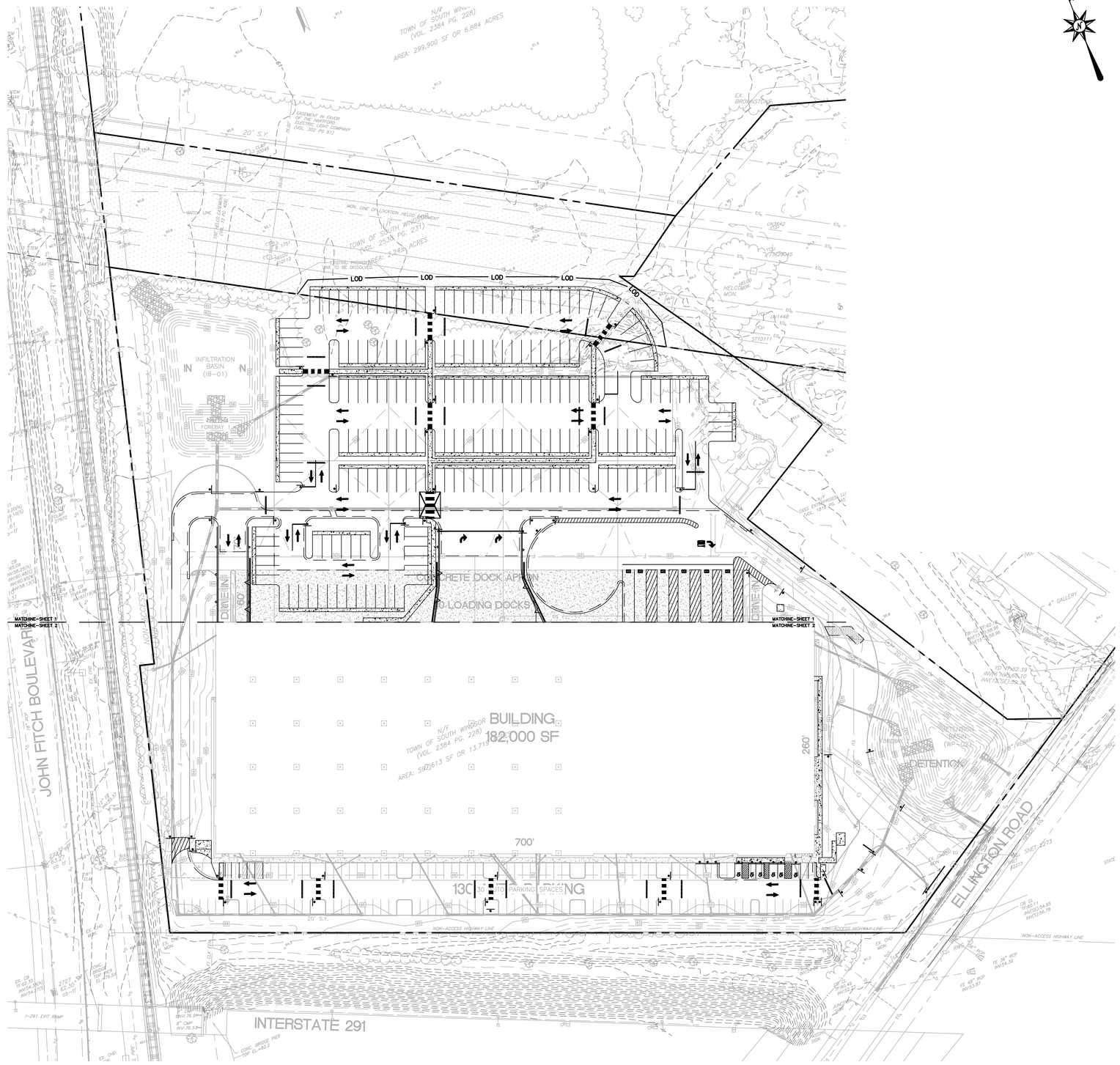

FOR PERMITTING PURPOSES ONLY
NOT RELEASED FOR CONSTRUCTION

GRAPHIC SCALE
60 30 0 60
SCALE IN FEET

Architecture
Engineering
Environmental
Land Surveying
BL Companies
355 Research Parkway
Meriden, CT 06450
(203) 630-1406
(203) 630-2615 Fax

STATE OF CONNECTICUT
MATTHEW T. BUTCHY
No. 22516
LICENSED PROFESSIONAL ENGINEER

PROPOSED WAREHOUSE
240 ELLINGTON ROAD
SOUTH WINDSOR, HARTFORD COUNTY, CONNECTICUT

No.	REVISIONS Date	Desc.

Designed	A.J.S.
Drawn	S.E.L.
Reviewed	
Scale	1"=60'
Project No.	2001166
Date	11/20/2020
CAD File: SS200116601	

Title
OVERALL SIGNAGE AND STRIPING PLAN

Sheet No.
OSS-1

Xref (s) : BD200116601 ; XC200116601 ; XZ200116601

11/20/2020, HRFALLI, G:\JOBS2011\2001\AVIPV\SS200116601.DWG,OSS-1 24X36.dwg

© 2020 BL COMPANIES, INC. THESE DRAWINGS SHALL NOT BE UTILIZED BY ANY PERSON, FIRM OR CORPORATION WITHOUT THE SPECIFIC WRITTEN PERMISSION OF BL COMPANIES.

FOR PERMITTING PURPOSES ONLY
NOT RELEASED FOR CONSTRUCTION

GRAPHIC SCALE
40 20 0 40
SCALE IN FEET

Architecture
Engineering
Environmental
Land Surveying

BL Companies

355 Research Parkway
Meriden, CT 06450
(203) 630-1406
(203) 630-2615 Fax

STATE OF CONNECTICUT
MATTHEW T. BUTCH
No. 25356
LICENSED
PROFESSIONAL ENGINEER

PROPOSED WAREHOUSE

240 ELLINGTON ROAD
SOUTH WINDSOR, HARTFORD COUNTY, CONNECTICUT

REVISIONS

No.	Date	Desc.

Designed	A.J.S.
Drawn	S.E.L.
Reviewed	
Scale	1"=40'
Project No.	2001166
Date	11/20/2020
CAD File: SS200116601	

Title

SIGNAGE AND STRIPING PLAN

Sheet No.

SS-1

Xref (s) : BD200116601 ; XC200116601 ; XZ200116601

11/20/2020, IRFRALLE, G:\CADD2\1170\2001166\DWG\SS200116601.DWG,SS-1 24X36 40SC

© 2020 BL COMPANIES, INC. THESE DRAWINGS SHALL NOT BE UTILIZED BY ANY PERSON, FIRM OR CORPORATION WITHOUT THE SPECIFIC WRITTEN PERMISSION OF BL COMPANIES.

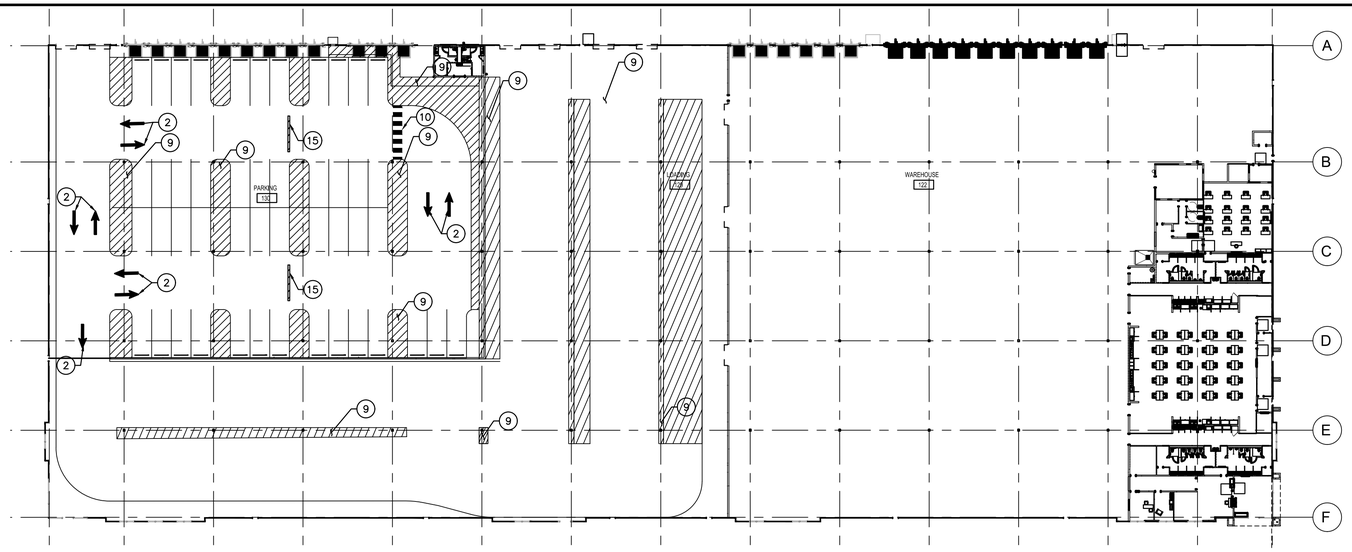

INTERIOR BUILDING PARKING INSET

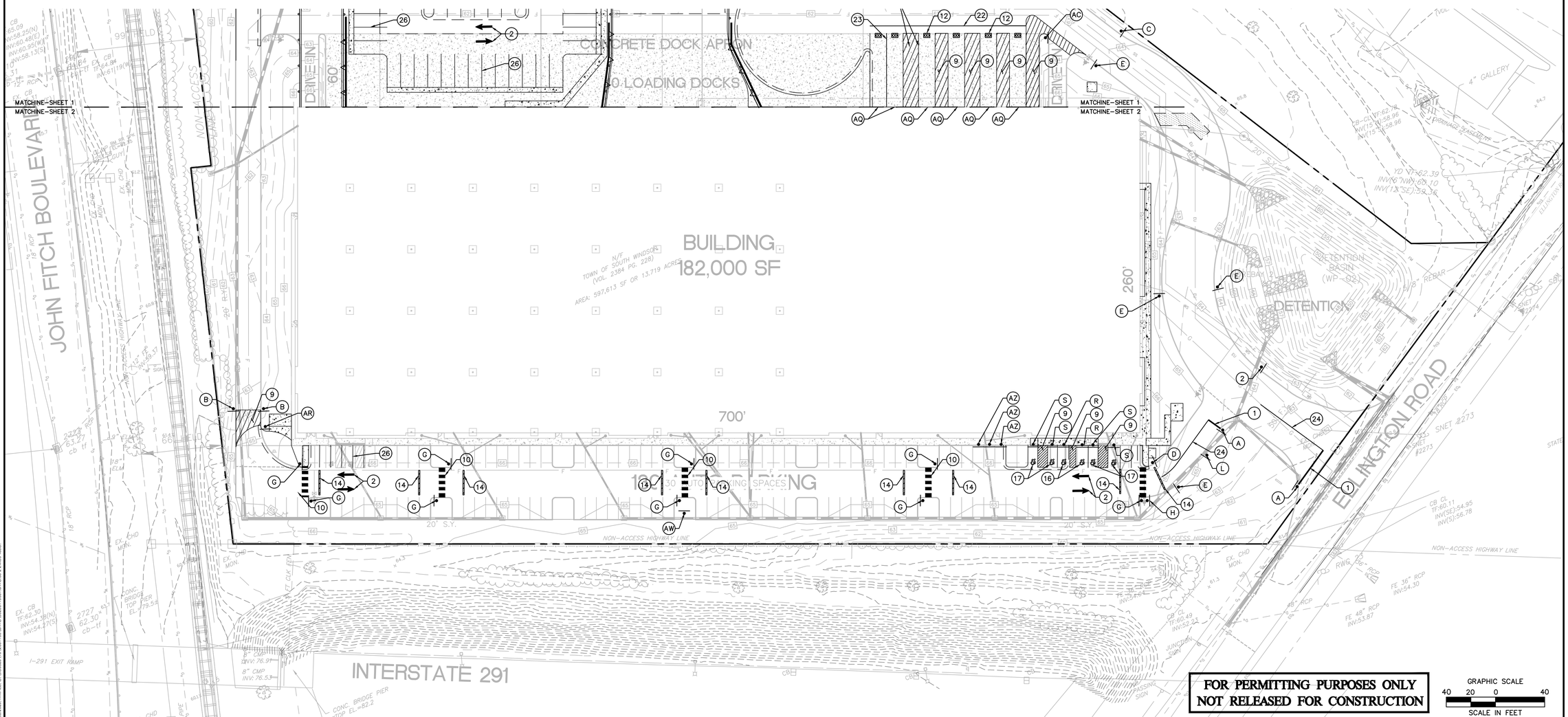

Architecture
Engineering
Environmental
Land Surveying

BL Companies

355 Research Parkway
Meriden, CT 06450
(203) 630-1406
(203) 630-2615 Fax

STATE OF CONNECTICUT
MATTHEW T. BUTCH
No. 22288
LICENSED
PROFESSIONAL ENGINEER

PROPOSED WAREHOUSE

240 ELLINGTON ROAD
SOUTH WINDSOR, HARTFORD COUNTY, CONNECTICUT

REVISIONS

No.	Date	Desc.

Designed	A.J.S.
Drawn	S.E.L.
Reviewed	
Scale	1"=40'
Project No.	2001166
Date	11/20/2020
CAD File: SS200116601	

Title

SIGNAGE AND STRIPING PLAN

Sheet No.

SS-2

Xref (s): B02001166\01 ; XC200116601 ; XZ200116601

11/20/2020, RFBAUE, G:\JOBS\01\2001166\DWG\SS200116601.DWG,SS-2 24X36 ARCH

© 2020 BL COMPANIES, INC. THESE DRAWINGS SHALL NOT BE UTILIZED BY ANY PERSON, FIRM OR CORPORATION WITHOUT THE SPECIFIC WRITTEN PERMISSION OF BL COMPANIES.

GRADING AND DRAINAGE LEGEND

PROPERTY LINE	
LIMIT OF DISTURBANCE LINE AND CONTRACT LIMIT LINE	LOD
STORM LINE	
CATCH BASIN	
STORM MANHOLE	
FLARED END	
END WALL OR HEADWALL	
OUTLET CONTROL STRUCTURE	
HYDRODYNAMIC SEPARATOR	
PROPOSED CONTOUR LINE	228
PROPOSED SPOT GRADE	x 100.00
ABBREVIATIONS – TC=TOP OF CURB – BC=BOTTOM OF CURB – TW=TOP OF WALL – BW=BOTTOM OF WALL	x TC=100.00 BC=99.50 x TW=108.00 BW=100.00
PROPOSED SURFACE SLOPE	2%
ELECTRIC LINE	E E
ELECTRIC AND TELECOMMUNICATIONS LINES	E/T
GAS LINE	G G
WATER LINE	W W
SANITARY SEWER LINE	S
SANITARY SEWER FORCE MAIN	SFM
OVERHEAD LINE	OH OH
TRANSFORMER	T
HYDRANT	
UTILITY POLE	
SANITARY/STORM MANHOLE	
SANITARY/STORM CLEANOUT	CO
WATER VALVE	WV
GATE VALVE	GV
THRUST BLOCK	
GREASE TRAP	

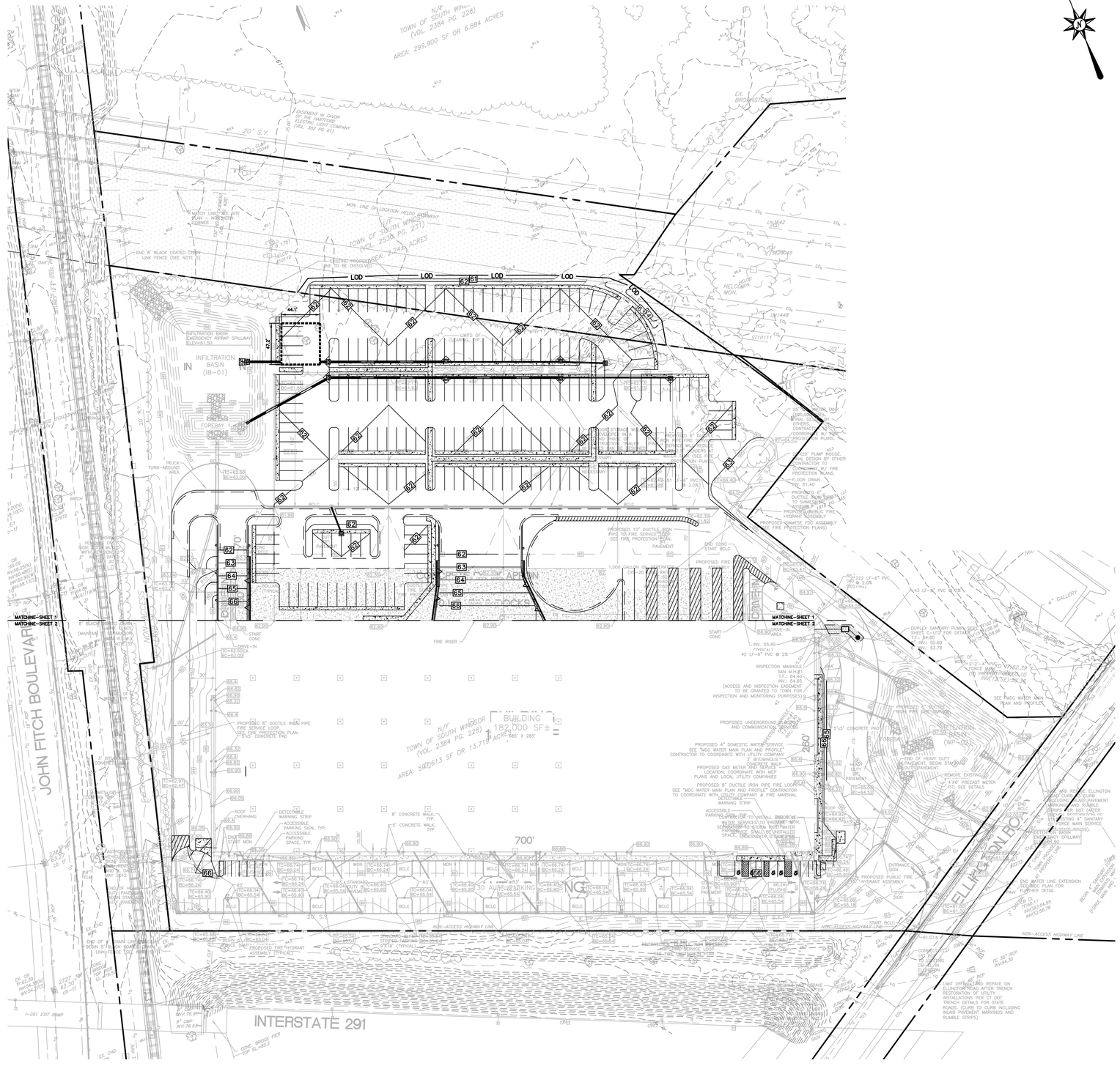

FOR PERMITTING PURPOSES ONLY
NOT RELEASED FOR CONSTRUCTION

GRAPHIC SCALE
60 30 0 60
SCALE IN FEET

Architecture
Engineering
Environmental
Land Surveying

BL Companies

355 Research Parkway
Meriden, CT 06450
(203) 630-1406
(203) 630-2615 Fax

STATE OF CONNECTICUT
MATTHEW J. BUTCH
No. 20288
LICENSED
PROFESSIONAL ENGINEER

PROPOSED WAREHOUSE

240 ELLINGTON ROAD
SOUTH WINDSOR, HARTFORD COUNTY, CONNECTICUT

No.	Date	Desc.

REVISIONS

Designed	A.J.S.
Drawn	S.E.L.
Reviewed	
Scale	1"=60'
Project No.	2001166
Date	11/20/2020
CAD File: GD2001166601	

Title

GRADING AND DRAINAGE PLAN

Sheet No.

OGD-1

Xref (s) : B0200116601 ; XR200116601 ; XC2001166601 ; XC2001166602 ; XC2001166603 ; XC2001166604

11/20/2020, HRAULL G:\JOBS2011\2001166\DWG\GD\2001166\DWG\OGD-1 24X36.dwg

© 2020 BL COMPANIES, INC. THESE DRAWINGS SHALL NOT BE UTILIZED BY ANY PERSON, FIRM OR CORPORATION WITHOUT THE SPECIFIC WRITTEN PERMISSION OF BL COMPANIES.

GRADING AND DRAINAGE LEGEND

PROPERTY LINE	
LIMIT OF DISTURBANCE LINE AND CONTRACT LIMIT LINE	LOD
STORM LINE	
CATCH BASIN	
STORM MANHOLE	
FLARED END	
END WALL OR HEADWALL	
OUTLET CONTROL STRUCTURE	
HYDRODYNAMIC SEPARATOR	
PROPOSED CONTOUR LINE	228
PROPOSED SPOT GRADE	x 100.00
ABBREVIATIONS – TC=TOP OF CURB – BC=BOTTOM OF CURB – TW=TOP OF WALL – BW=BOTTOM OF WALL	x TC=100.00 BC=99.50 x TW=108.00 BW=100.00
PROPOSED SURFACE SLOPE	2%
ELECTRIC LINE	E E
ELECTRIC AND TELECOMMUNICATIONS LINES	E/T
GAS LINE	G G
WATER LINE	W W
SANITARY SEWER LINE	S
SANITARY SEWER FORCE MAIN	SFM
OVERHEAD LINE	OH OH
TRANSFORMER	T
HYDRANT	
UTILITY POLE	
SANITARY/STORM MANHOLE	
SANITARY/STORM CLEANOUT	CO
WATER VALVE	WV
GATE VALVE	GV
THRUST BLOCK	
GREASE TRAP	

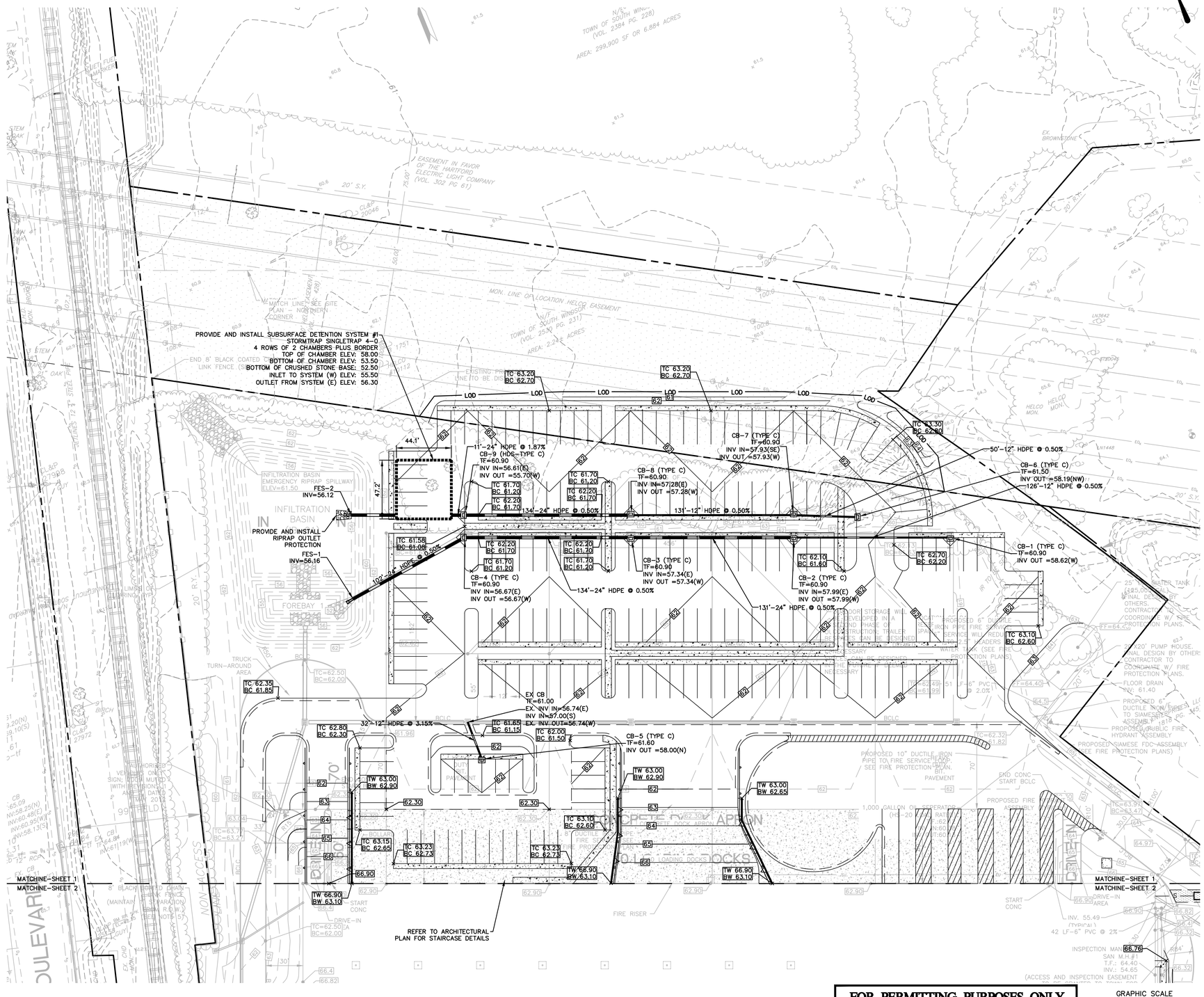

FOR PERMITTING PURPOSES ONLY
NOT RELEASED FOR CONSTRUCTION

Architecture
Engineering
Environmental
Land Surveying

BL Companies

355 Research Parkway
Meriden, CT 06450
(203) 630-1406
(203) 630-2615 Fax

STATE OF CONNECTICUT
MATTHEW T. BUDNICK
No. 20886
LICENSED
PROFESSIONAL ENGINEER

PROPOSED WAREHOUSE

240 ELLINGTON ROAD

SOUTH WINDSOR, HARTFORD COUNTY, CONNECTICUT

REVISIONS

No.	Date	Desc.

Designed	A.J.S.
Drawn	S.E.L.
Reviewed	
Scale	1"=40'
Project No.	2001166
Date	11/20/2020
CAD File: GD200116601	

Title

GRADING AND DRAINAGE PLAN

Sheet No.

GD-1

Xref (s): BD200116601 ; XD200116601 ; XC200116601 ; XC200116602 ; XC200116603 ; XC200116604

11/20/2020, YRIGALLE, G:\CADD\2001\2001166\SURVEY\GD\2001166FLOOD1.2400X.4000C

© 2020 BL COMPANIES, INC. THESE DRAWINGS SHALL NOT BE UTILIZED BY ANY PERSON, FIRM OR CORPORATION WITHOUT THE SPECIFIC WRITTEN PERMISSION OF BL COMPANIES.

GRADING AND DRAINAGE LEGEND

PROPERTY LINE	
LIMIT OF DISTURBANCE LINE AND CONTRACT LIMIT LINE	LOD
STORM LINE	
CATCH BASIN	
STORM MANHOLE	
FLARED END	
END WALL OR HEADWALL	
OUTLET CONTROL STRUCTURE	
HYDRODYNAMIC SEPARATOR	
PROPOSED CONTOUR LINE	228
PROPOSED SPOT GRADE	x 100.00
ABBREVIATIONS – TC=TOP OF CURB – BC=BOTTOM OF CURB – TW=TOP OF WALL – BW=BOTTOM OF WALL	x TC=100.00 BC=99.50 x TW=108.00 BW=100.00
PROPOSED SURFACE SLOPE	2%
ELECTRIC LINE	E E
ELECTRIC AND TELECOMMUNICATIONS LINES	E/T
GAS LINE	G G
WATER LINE	W W
SANITARY SEWER LINE	S
SANITARY SEWER FORCE MAIN	SFM

OVERHEAD LINE	OH OH
TRANSFORMER	T
HYDRANT	
UTILITY POLE	
SANITARY/STORM MANHOLE	
SANITARY/STORM CLEANOUT	CO
WATER VALVE	WV
GATE VALVE	GV
THRUST BLOCK	
GREASE TRAP	

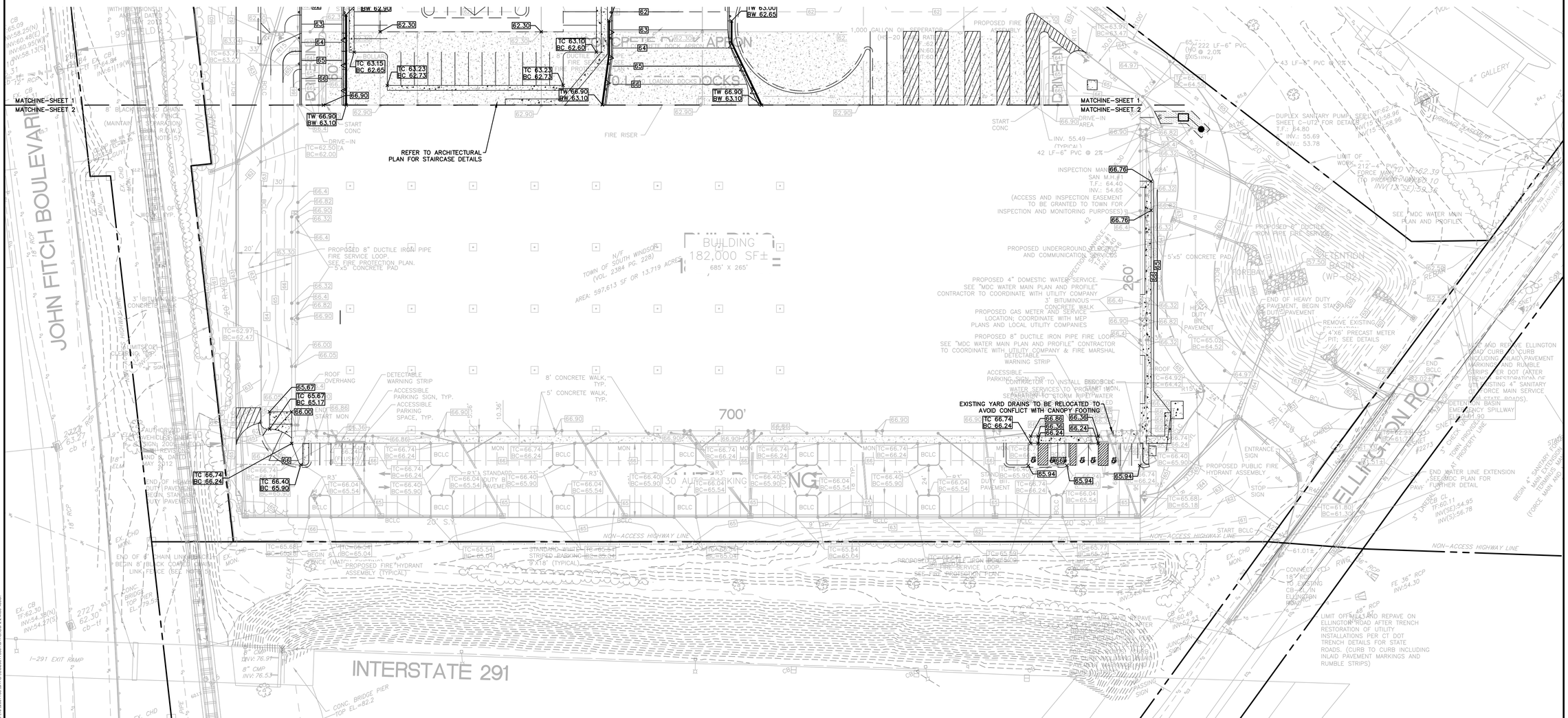

FOR PERMITTING PURPOSES ONLY
NOT RELEASED FOR CONSTRUCTION

GRAPHIC SCALE
40 20 0 40
SCALE IN FEET

Architecture
Engineering
Environmental
Land Surveying
BL Companies
355 Research Parkway
Meriden, CT 06450
(203) 630-1406
(203) 630-2615 Fax

STATE OF CONNECTICUT
MATTHEW J. BUDNY
No. 20256
LICENSED PROFESSIONAL ENGINEER

PROPOSED WAREHOUSE
240 ELLINGTON ROAD
SOUTH WINDSOR, HARTFORD COUNTY, CONNECTICUT

No.	Date	Desc.
REVISIONS		

Designed	A.J.S.
Drawn	S.E.L.
Reviewed	
Scale	1"=40'
Project No.	2001166
Date	11/20/2020
CAD File: GD200116601	

Title
GRADING AND DRAINAGE PLAN

Sheet No.
GD-2

Xref list: : BD200116601 : XD200116601 : XC200116601 : XC200116602 : XC200116603 : XC200116604

© 2020 BL COMPANIES, INC. THESE DRAWINGS SHALL NOT BE UTILIZED BY ANY PERSON, FIRM OR CORPORATION WITHOUT THE SPECIFIC WRITTEN PERMISSION OF BL COMPANIES.

SITE UTILITIES LEGEND

PROPERTY LINE	
LIMIT OF DISTURBANCE LINE AND CONTRACT LIMIT LINE	LOD
ELECTRIC LINE	E E
ELECTRIC AND TELECOMMUNICATIONS LINES	E/T
GAS LINE	G G
WATER LINE	W W
SANITARY SEWER LINE	S
SANITARY SEWER FORCE MAIN	SFM
OVERHEAD LINE	OH OH
TRANSFORMER	T
HYDRANT	
UTILITY POLE	
SANITARY MANHOLE	
SANITARY CLEANOUT	CO
WATER VALVE	WV
GATE VALVE	GV
THRUST BLOCK	
GREASE TRAP	
OUTLET CONTROL STRUCTURE	
HYDRODYNAMIC SEPARATOR	
STORM LINE	
CATCH BASIN	
STORM MANHOLE	
FLARED END	
END WALL OR HEADWALL	
PROPOSED CONTOUR LINE	228
PROPOSED SPOT GRADE	X 100.00
ABBREVIATIONS – TC=TOP OF CURB – BC=BOTTOM OF CURB – TW=TOP OF WALL – BW=BOTTOM OF WALL	X TC=100.00 BC=99.50 X TW=108.00 BW=100.00
PROPOSED SURFACE SLOPE	2%

NOTES

CONTRACTOR SHALL CONFIRM LOCATION, SIZE, CONDITION AND ELEVATION OF ALL UTILITY LATERAL STUBS, WATER MAINS, GAS MAINS AND ELECTRICAL SERVICES PRIOR TO CONSTRUCTION.

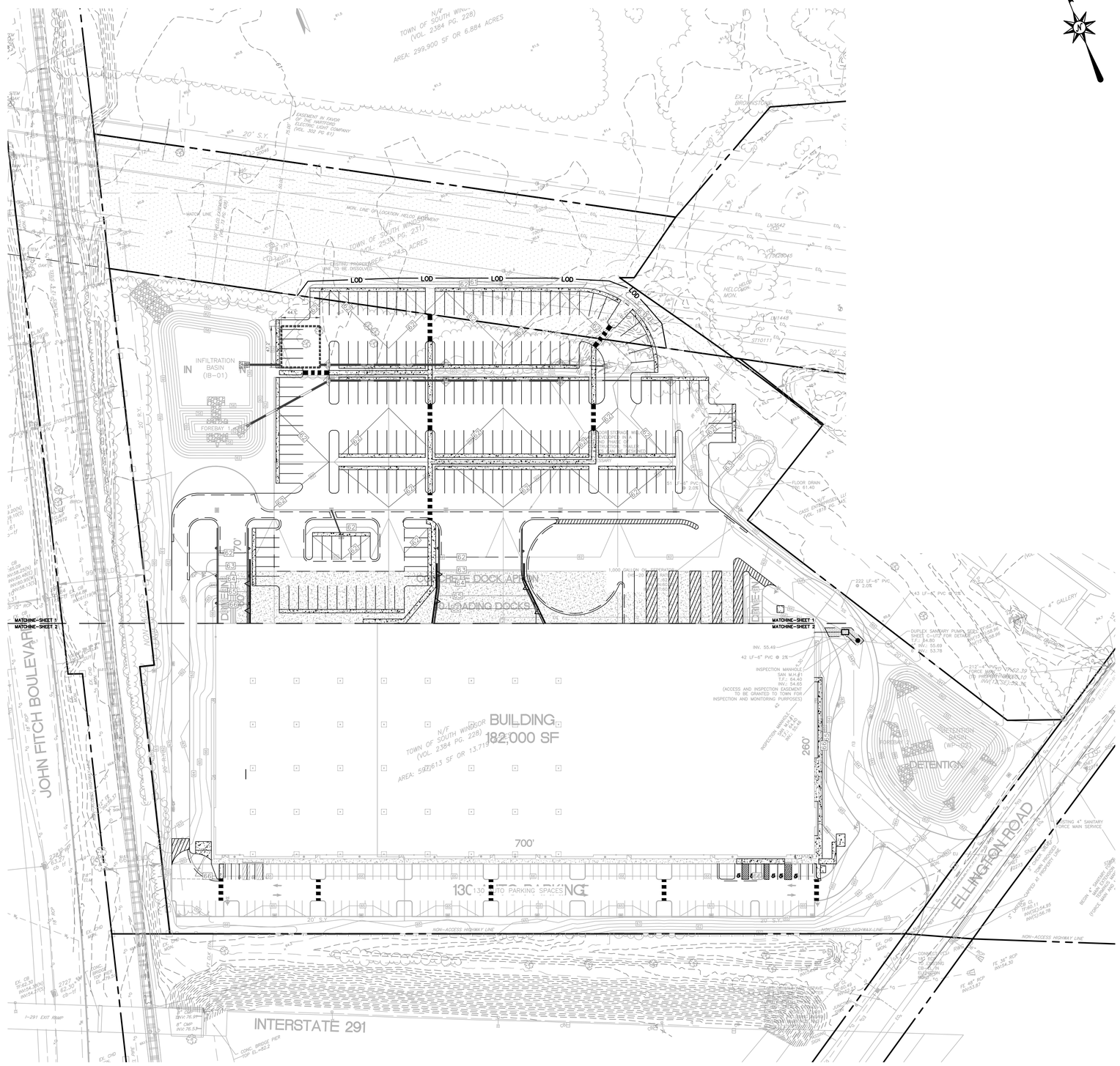

FOR PERMITTING PURPOSES ONLY
NOT RELEASED FOR CONSTRUCTION

GRAPHIC SCALE
60 30 0 60
SCALE IN FEET

Architecture
Engineering
Environmental
Land Surveying
BL Companies
355 Research Parkway
Meriden, CT 06450
(203) 630-1406
(203) 630-2615 Fax

STATE OF CONNECTICUT
MATTHEW J. BUTCHKO
No. 20288
LICENSED
PROFESSIONAL ENGINEER

PROPOSED WAREHOUSE
240 ELLINGTON ROAD
SOUTH WINDSOR, HARTFORD COUNTY, CONNECTICUT

REVISIONS No.	Date	Desc.

Designed	A.J.S.
Drawn	S.E.L.
Reviewed	
Scale	1"=60'
Project No.	2001166
Date	11/20/2020
CAD File: SU200116601	

Title
SITE UTILITIES PLAN

Sheet No.
OSU-1

Xref (s) : BD200116601 ; XZ200116601 ; XC200116601 ; XC200116602 ; XC200116603 ; XC200116604

© 2020 BL COMPANIES, INC. THESE DRAWINGS SHALL NOT BE UTILIZED BY ANY PERSON, FIRM OR CORPORATION WITHOUT THE SPECIFIC WRITTEN PERMISSION OF BL COMPANIES.

SITE UTILITIES LEGEND

PROPERTY LINE	
LIMIT OF DISTURBANCE LINE AND CONTRACT LIMIT LINE	LOD
ELECTRIC LINE	E E
ELECTRIC AND TELECOMMUNICATIONS LINES	E/T
GAS LINE	G G
WATER LINE	W W
SANITARY SEWER LINE	S
SANITARY SEWER FORCE MAIN	SFM
OVERHEAD LINE	OH OH
TRANSFORMER	T
HYDRANT	
UTILITY POLE	
SANITARY MANHOLE	
SANITARY CLEANOUT	CO
WATER VALVE	WV
GATE VALVE	GV
THRUST BLOCK	
GREASE TRAP	
OUTLET CONTROL STRUCTURE	
HYDRODYNAMIC SEPARATOR	
STORM LINE	
CATCH BASIN	
STORM MANHOLE	
FLARED END	
END WALL OR HEADWALL	
PROPOSED CONTOUR LINE	228
PROPOSED SPOT GRADE	X 100.00
ABBREVIATIONS – TC=TOP OF CURB – BC=BOTTOM OF CURB – TW=TOP OF WALL – BW=BOTTOM OF WALL	X TC=100.00 BC=99.50 X TW=108.00 BW=100.00
PROPOSED SURFACE SLOPE	2%

NOTES

CONTRACTOR SHALL CONFIRM LOCATION, SIZE, CONDITION AND ELEVATION OF ALL UTILITY LATERAL STUBS, WATER MAINS, GAS MAINS AND ELECTRICAL SERVICES PRIOR TO CONSTRUCTION.

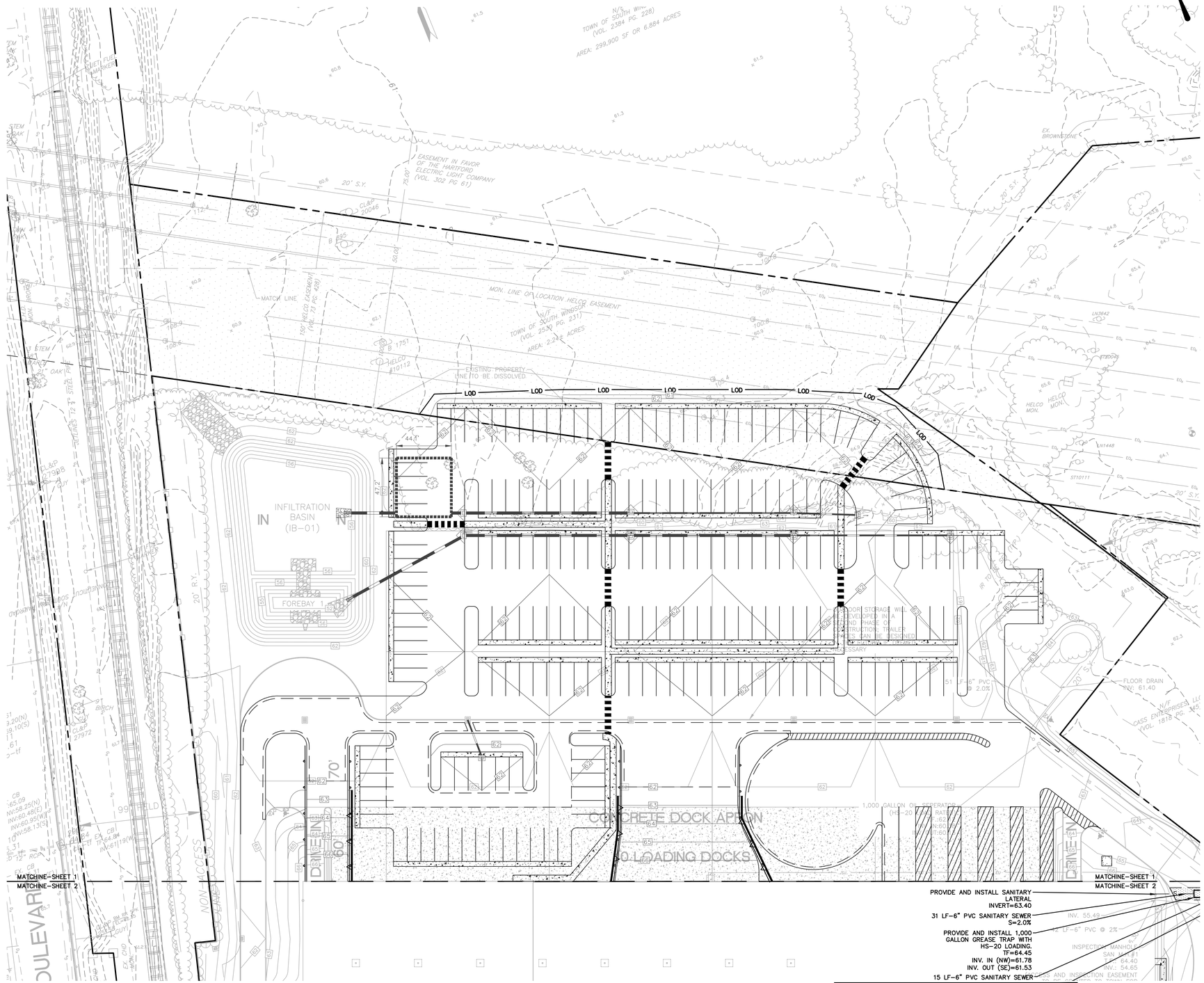

FOR PERMITTING PURPOSES ONLY
NOT RELEASED FOR CONSTRUCTION

Architecture
Engineering
Environmental
Land Surveying
BL Companies
355 Research Parkway
Meriden, CT 06450
(203) 630-1406
(203) 630-2615 Fax

STATE OF CONNECTICUT
MATTHEW J. BUTCHKO
No. 22584
LICENSED
PROFESSIONAL ENGINEER

PROPOSED WAREHOUSE
240 ELLINGTON ROAD
SOUTH WINDSOR, HARTFORD COUNTY, CONNECTICUT

REVISIONS

No.	Date	Desc.

Designed	A.J.S.
Drawn	S.E.L.
Reviewed	
Scale	1"=40'
Project No.	2001166
Date	11/20/2020
CAD File: SU200116601	

Title
SITE UTILITIES PLAN

Sheet No.
SU-1

Xref (s): : BS200116601 ; XZ200116601 ; XC200116601 ; XC200116602 ; XC200116603 ; XC200116604

11/20/2020, JRTRAUL G:\JOBS\01\2001166\DWG\SU\2001166 SITE DWG.SU-1 24X36.dwg

© 2020 BL COMPANIES, INC. THESE DRAWINGS SHALL NOT BE UTILIZED BY ANY PERSON, FIRM OR CORPORATION WITHOUT THE SPECIFIC WRITTEN PERMISSION OF BL COMPANIES.

SITE UTILITIES LEGEND

PROPERTY LINE	
LIMIT OF DISTURBANCE LINE AND CONTRACT LIMIT LINE	LOD
ELECTRIC LINE	E E
ELECTRIC AND TELECOMMUNICATIONS LINES	E/T
GAS LINE	G G
WATER LINE	W W
SANITARY SEWER LINE	S
SANITARY SEWER FORCE MAIN	SFM
OVERHEAD LINE	OH OH
TRANSFORMER	T
HYDRANT	
UTILITY POLE	
SANITARY MANHOLE	
SANITARY CLEANOUT	CO
WATER VALVE	WV
GATE VALVE	GV
THRUST BLOCK	
GREASE TRAP	
OUTLET CONTROL STRUCTURE	
HYDRODYNAMIC SEPARATOR	
STORM LINE	
CATCH BASIN	
STORM MANHOLE	
FLARED END	
END WALL OR HEADWALL	
PROPOSED CONTOUR LINE	228
PROPOSED SPOT GRADE	x 100.00
ABBREVIATIONS – TC=TOP OF CURB – BC=BOTTOM OF CURB – TW=TOP OF WALL – BW=BOTTOM OF WALL	x TC=100.00 BC=99.50 x TW=108.00 BW=100.00
PROPOSED SURFACE SLOPE	2%

NOTES

CONTRACTOR SHALL CONFIRM LOCATION, SIZE, CONDITION AND ELEVATION OF ALL UTILITY LATERAL STUBS, WATER MAINS, GAS MAINS AND ELECTRICAL SERVICES PRIOR TO CONSTRUCTION.

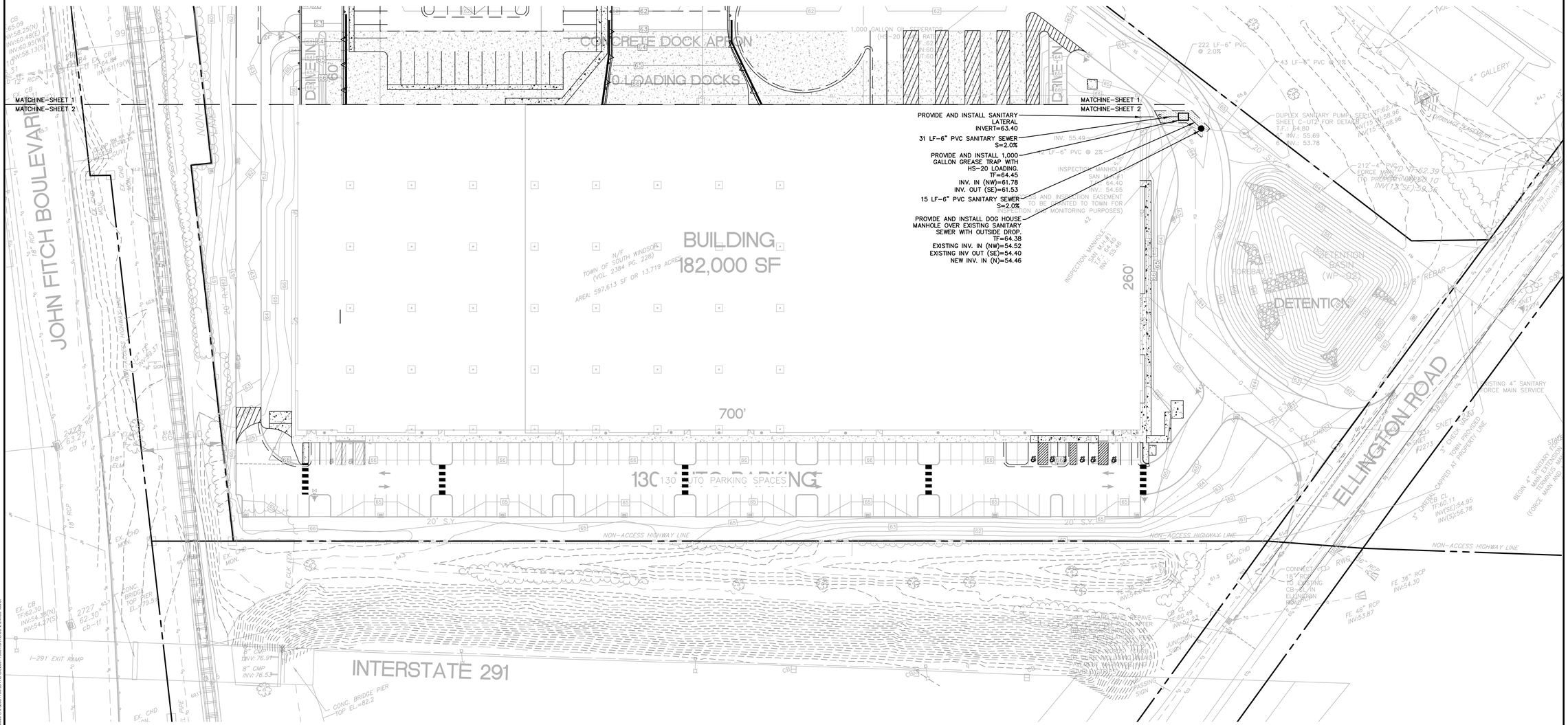

© 2020 BL COMPANIES, INC. THESE DRAWINGS SHALL NOT BE UTILIZED BY ANY PERSON, FIRM OR CORPORATION WITHOUT THE SPECIFIC WRITTEN PERMISSION OF BL COMPANIES.

11/20/2020, HTRAUB, G:\JOBS\SU\2001166\DWG\SU2001166.DWG-SU-2-NEW.#BTC

Architecture
Engineering
Environmental
Land Surveying
BL Companies
355 Research Parkway
Meriden, CT 06450
(203) 630-1406
(203) 630-2615 Fax

STATE OF CONNECTICUT
MATTHEW T. BUTCH
No. 20288
LICENSED
PROFESSIONAL ENGINEER

PROPOSED WAREHOUSE
240 ELLINGTON ROAD
SOUTH WINDSOR, HARTFORD COUNTY, CONNECTICUT

REVISIONS

No.	Date	Desc.

Designed	A.J.S.
Drawn	S.E.L.
Reviewed	
Scale	1"=40'
Project No.	2001166
Date	11/20/2020
CAD File: SU200116601	

Title

SITE UTILITIES PLAN

Sheet No.

SU-2

Xref (s): B020011601; XZ200116601; XC200116601; XC200116602; XC200116603; XC200116604

EROSION CONTROL LEGEND:

CONTROL MEASURE	ILLUSTRATION
HAY BALES AT CATCH BASINS	
SILT FENCE	SF
CONSTRUCTION ENTRANCE	CE
LIMIT OF DISTURBANCE LINE AND CONTRACT LIMIT LINE	LOD
STOCKPILE AREA WITH DOUBLE ROW OF SILT FENCE	

SOIL TYPE

MdB	MADELAND – PENN AND LONSDALE MATERIAL GENTLY SLOPING
UD	UDORTHENTS
Ur	URBAN LAND

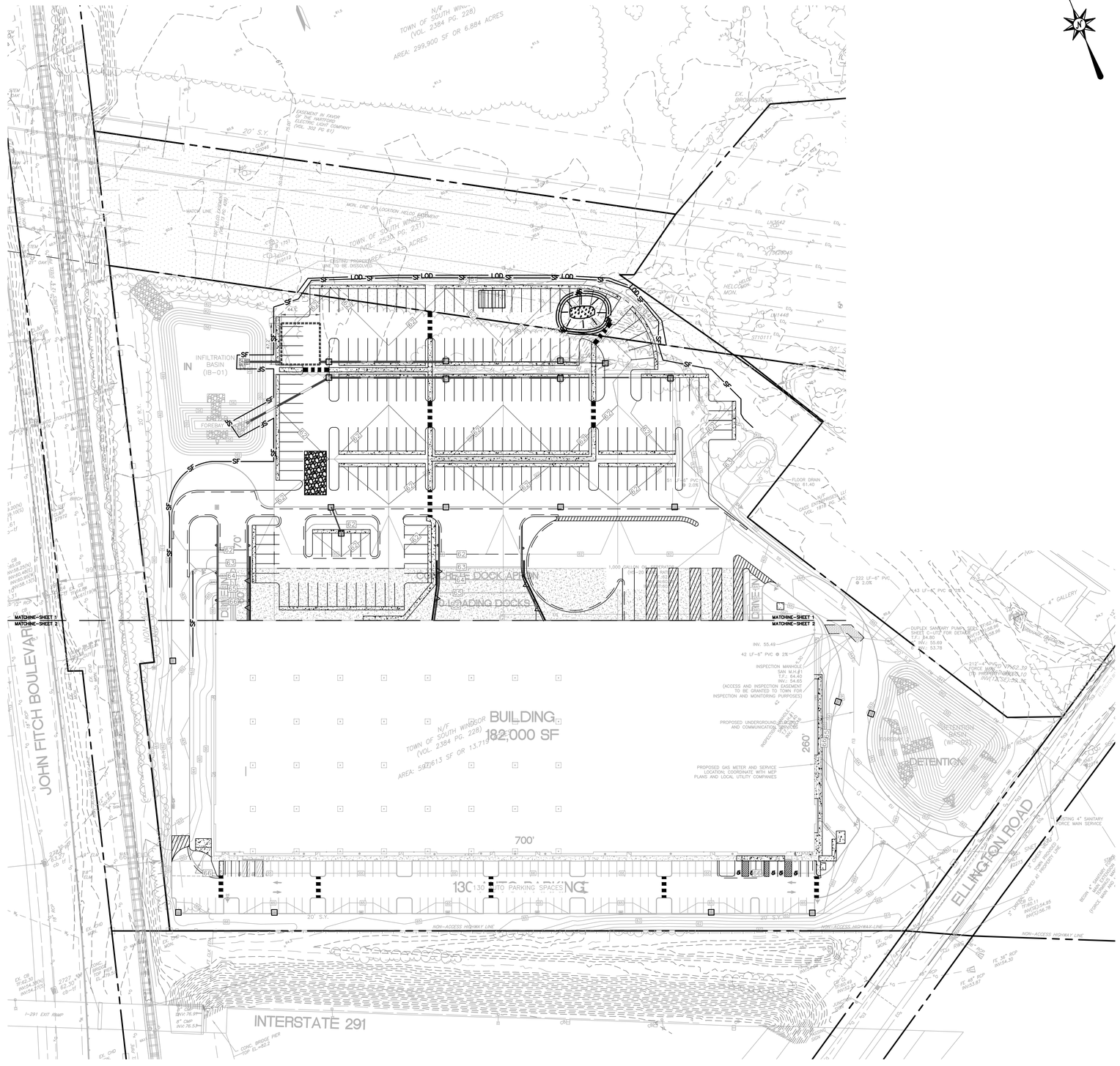

FOR PERMITTING PURPOSES ONLY
NOT RELEASED FOR CONSTRUCTION

GRAPHIC SCALE
60 30 0 60
SCALE IN FEET

Architecture
Engineering
Environmental
Land Surveying

BL Companies

355 Research Parkway
Meriden, CT 06450
(203) 630-1406
(203) 630-2615 Fax

STATE OF CONNECTICUT
MATTHEW T. BUTCH
No. 22584
LICENSED
PROFESSIONAL ENGINEER

PROPOSED WAREHOUSE
240 ELLINGTON ROAD
SOUTH WINDSOR, HARTFORD COUNTY, CONNECTICUT

REVISIONS

No.	Date	Desc.

Designed	A.J.S.
Drawn	S.E.L.
Reviewed	
Scale	1"=60'
Project No.	2001166
Date	11/20/2020
CAD File: EC200116601	

Title
OVERALL SEDIMENT AND EROSION CONTROL PLAN

Sheet No.
OEC-1

Xref (s): : BD200116601 : XR200116601 : XC200116601 : XC200116602 : XC200116603 : XC200116604 : XC200116605

© 2020 BL COMPANIES, INC. THESE DRAWINGS SHALL NOT BE UTILIZED BY ANY PERSON, FIRM OR CORPORATION WITHOUT THE SPECIFIC WRITTEN PERMISSION OF BL COMPANIES.

EROSION CONTROL LEGEND:

CONTROL MEASURE	ILLUSTRATION
HAY BALES AT CATCH BASINS	
SILT FENCE	SF
CONSTRUCTION ENTRANCE	CE
LIMIT OF DISTURBANCE LINE AND CONTRACT LIMIT LINE	LOD
STOCKPILE AREA WITH DOUBLE ROW OF SILT FENCE	

SOIL TYPE

MdB	MADELAND – PENN AND LONSDALE MATERIAL GENTLY SLOPING
UD	UDORTHENTS
Ur	URBAN LAND

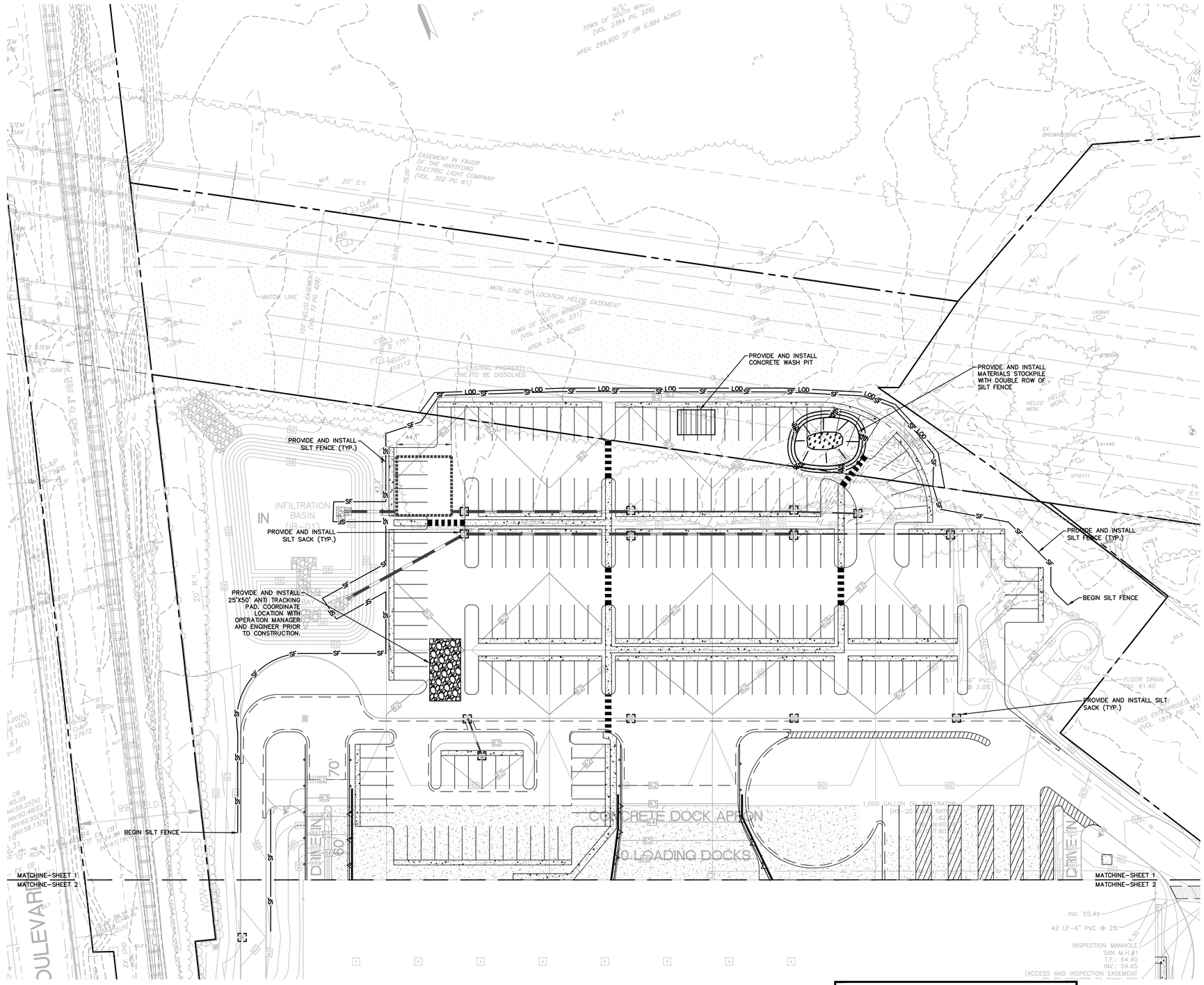

FOR PERMITTING PURPOSES ONLY
NOT RELEASED FOR CONSTRUCTION

GRAPHIC SCALE
40 20 0 40
SCALE IN FEET

Architecture
Engineering
Environmental
Land Surveying

BL Companies

355 Research Parkway
Meriden, CT 06450
(203) 630-1406
(203) 630-2615 Fax

STATE OF CONNECTICUT
MATTHEW J. BUTCH
No. 22584
LICENSED
PROFESSIONAL ENGINEER

PROPOSED WAREHOUSE

240 ELLINGTON ROAD
SOUTH WINDSOR, HARTFORD COUNTY, CONNECTICUT

REVISIONS

No.	Date	Desc.

Designed	A.J.S.
Drawn	S.E.L.
Reviewed	
Scale	1"=40'
Project No.	2001166
Date	11/20/2020
CAD File: EC200116601	

Title

SEDIMENT AND EROSION CONTROL PLAN

Sheet No.

EC-1

Xref (s): : BD200116601 : XZ200116601 : XC200116601 : XC200116602 : XC200116603 : XC200116604 : XC200116605

11/20/2020, STEVAUD, G:\JOBS\20\1\200116\DWG\EC200116601.DWG-EC-1 24X36.4PSC

© 2020 BL COMPANIES, INC. THESE DRAWINGS SHALL NOT BE UTILIZED BY ANY PERSON, FIRM OR CORPORATION WITHOUT THE SPECIFIC WRITTEN PERMISSION OF BL COMPANIES.

EROSION CONTROL LEGEND:

CONTROL MEASURE	ILLUSTRATION
HAY BALES AT CATCH BASINS	
SILT FENCE	SF
CONSTRUCTION ENTRANCE	CE
LIMIT OF DISTURBANCE LINE AND CONTRACT LIMIT LINE	LOD
STOCKPILE AREA WITH DOUBLE ROW OF SILT FENCE	

SOIL TYPE

MdB	MADELAND – PENN AND LONSDALE MATERIAL GENTLY SLOPING
UD	UDORTHENTS
Ur	URBAN LAND

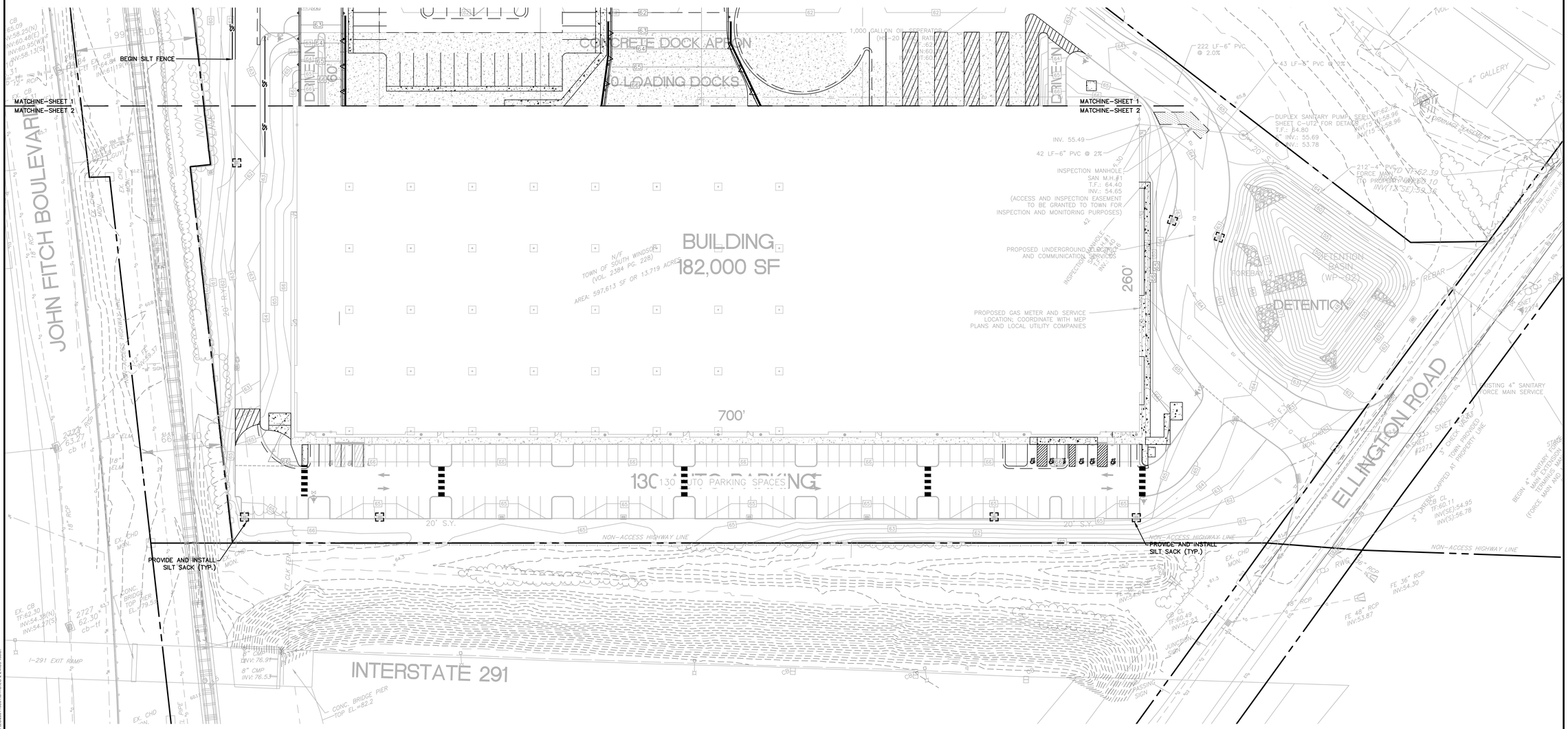

FOR PERMITTING PURPOSES ONLY
NOT RELEASED FOR CONSTRUCTION

GRAPHIC SCALE
40 20 0 40
SCALE IN FEET

Architecture
Engineering
Environmental
Land Surveying
BL Companies
355 Research Parkway
Meriden, CT 06450
(203) 630-1406
(203) 630-2615 Fax

STATE OF CONNECTICUT
MATTHEW J. BUTCHKO
No. 28,000
LICENSED PROFESSIONAL ENGINEER

PROPOSED WAREHOUSE
240 ELLINGTON ROAD
SOUTH WINDSOR, HARTFORD COUNTY, CONNECTICUT

REVISIONS

No.	Date	Desc.

Designed	A.J.S.
Drawn	S.E.L.
Reviewed	
Scale	1"=40'
Project No.	2001166
Date	11/20/2020
CAD File: EC200116601	

Title:
SEDIMENT AND EROSION CONTROL PLAN

Sheet No.
EC-2

Xref (s): : B:\2001166\01 : XC200116601 : XC200116602 : XC200116603 : XC200116604 : XC200116605

11/20/2020, YRIVALLI, G:\CADD\2001\2001166\DWG\EC-2 MODIFIED.DWG

© 2020 BL COMPANIES, INC. THESE DRAWINGS SHALL NOT BE UTILIZED BY ANY PERSON, FIRM OR CORPORATION WITHOUT THE SPECIFIC WRITTEN PERMISSION OF BL COMPANIES.

SEDIMENT AND EROSION CONTROL NOTES

SEDIMENT AND EROSION CONTROL NOTES – CONNECTICUT

SEDIMENT & EROSION CONTROL NARRATIVE
THE SEDIMENT AND EROSION CONTROL PLAN WAS DEVELOPED TO PROTECT THE EXISTING ROADWAY AND STORM DRAINAGE SYSTEMS, ADJACENT PROPERTIES, AND ANY ADJACENT WETLAND AREA AND ANY ADJACENT WATER COURSE FROM SEDIMENT LADEN SURFACE RUNOFF AND EROSION. A CONSTRUCTION SEQUENCE IS PROVIDED TO PROVIDE SURFACE RUNOFF EROSION CONTROLS PRIOR TO THE BEGINNING OF PROJECT DEMOLITION AND/OR CONSTRUCTION.

CONSTRUCTION SCHEDULE
THE ANTICIPATED STARTING DATE FOR CONSTRUCTION IS SPRING 2021 WITH COMPLETION ANTICIPATED FALL 2021
APPROPRIATE SEDIMENT AND EROSION CONTROL MEASURES AS DESCRIBED HEREIN SHALL BE INSTALLED BY THE CONTRACTOR PRIOR TO THE COMMENCEMENT OF ALL DEMOLITION OR CONSTRUCTION ACTIVITY. SCHEDULE WORK TO MINIMIZE THE LENGTH OF TIME THAT BARE SOIL WILL BE EXPOSED.

CONTINGENCY EROSION PLAN
THE CONTRACTOR SHALL INSTALL ALL SPECIFIED SEDIMENT AND EROSION CONTROL MEASURES AND WILL BE REQUIRED TO MAINTAIN THEM IN THEIR INTENDED FUNCTIONING CONDITION. THE AGENTS OF THE MUNICIPALITY AND/OR INLAND WETLANDS COMMISSION AND/OR CIVIL ENGINEER SHALL HAVE THE AUTHORITY TO REQUIRE SUPPLEMENTAL MAINTENANCE OR ADDITIONAL MEASURES IF FIELD CONDITIONS ARE ENCOUNTERED BEYOND WHAT WOULD NORMALLY BE ANTICIPATED.

CONSTRUCTION SEQUENCE
THE FOLLOWING CONSTRUCTION SEQUENCE IS RECOMMENDED:

1. CONTACT MUNICIPALITY AND/OR INLAND WETLANDS COMMISSION AGENT AT LEAST FORTY-EIGHT (48) HOURS PRIOR TO COMMENCEMENT OF ANY DEMOLITION, CONSTRUCTION OR REGULATED ACTIVITY ON THIS PROJECT.

2. CLEARING LIMITS SHALL BE PHYSICALLY MARKED IN THE FIELD AND APPROVED BY THE MUNICIPALITY AND/OR INLAND WETLANDS COMMISSION AGENT PRIOR TO THE START OF WORK ON THE SITE. INSTALL TREE PROTECTION AND PERIMETER SILT FENCE.

3. CONSTRUCT STONE CONSTRUCTION ENTRANCE ANTI-TRACKING PADS AT CONSTRUCTION ENTRANCES/EXITS AND INSTALL FILTER FABRIC AROUND GRATES OF CATCH BASINS OR INSTALL SILT SACKS ON CATCH BASIN INLETS ON OFF SITE ROADS. INSTALL SILT FENCE AND OTHER EROSION CONTROL DEVICES INDICATED ON THESE PLANS AT PERIMETER OF PROPOSED SITE DISTURBANCE AND INSTALL ALL EROSION CONTROL MEASURES AND TREE PROTECTION INDICATED ON THESE PLANS. INSTALL SEDIMENT BASINS AND SEDIMENT TRAPS IF REQUIRED AT LOW AREAS OF SITE OR AS ORDERED BY THE ENGINEER OR AS SHOWN ON THESE PLANS.

4. CLEAR AND GRUB SITE. STOCKPILE CHIPS. STOCKPILE TOPSOIL. INSTALL SEDIMENT AND EROSION CONTROLS AT STOCKPILES.

5. BUILDING AND SITE DEMOLITION AND REMOVAL. PAVEMENT REMOVAL.

6. INSTALL SILT FENCE. COMMENCE INSTALLATION OF STORM DRAINAGE SYSTEM.

7. COMMENCE EARTHWORK, CONSTRUCT FILL SLOPE. INSTALL ADDITIONAL SEDIMENT AND EROSION CONTROLS AS WORK PROGRESSES AND CONTINUE STORM DRAINAGE SYSTEM CONSTRUCTION, TOPSOIL AND SEED SLOPES WHICH HAVE ACHIEVED FINAL SITE GRADING.

8. CONSTRUCTION STAKING OF UTILITIES, ACCESS DRIVES, AND PARKING AREAS.

9. ROUGH GRADING AND FILLING OF SUBGRADES AND SLOPES.

10. IMMEDIATELY UPON DISCOVERING UNFORESEEN CIRCUMSTANCES POSING THE POTENTIAL FOR ACCELERATED EROSION AND/OR SEDIMENT POLLUTION, THE OPERATOR SHALL IMPLEMENT APPROPRIATE BEST MANAGEMENT PRACTICES TO ELIMINATE THE POTENTIAL FOR ACCELERATED EROSION AND/OR SEDIMENT POLLUTION.

11. BEFORE DISPOSING OF SOIL OR RECEIVING BORROW FOR THE SITE, THE CONTRACTOR MUST PROVIDE EVIDENCE THAT EACH SPOIL OR BORROW AREA HAS A SEDIMENT AND EROSION CONTROL PLAN APPROVED BY THE MUNICIPALITY AND/OR INLAND WETLANDS COMMISSION AND WHICH IS BEING IMPLEMENTED AND MAINTAINED. THE CONTRACTOR SHALL ALSO NOTIFY THE MUNICIPALITY AND/OR INLAND WETLANDS COMMISSION IN WRITING OF ALL RECEIVING SPOIL AND BORROW AREAS WHEN THEY HAVE BEEN IDENTIFIED.

12. CONTINUE INSTALLATION OF STORM DRAINAGE AS SUBGRADE ELEVATIONS ARE ACHIEVED.

13. THROUGHOUT CONSTRUCTION SEQUENCE, REMOVE SEDIMENT FROM BEHIND SILT FENCES, HAY BALES AND OTHER EROSION CONTROL DEVICES, AND FROM SEDIMENT BASINS AND SEDIMENT TRAPS AS REQUIRED. REMOVAL SHALL BE ON A PERIODIC BASIS (EVERY SIGNIFICANT RAINFALL OF 0.25 INCH OR GREATER). INSPECTION OF SEDIMENT AND EROSION CONTROL MEASURES SHALL BE ON A WEEKLY BASIS AND AFTER EACH RAINFALL OF 0.25 INCHES OR GREATER. SEDIMENT COLLECTED SHALL BE DEPOSITED AND SPREAD EVENLY UPLAND ON SLOPES DURING CONSTRUCTION.

14. INSTALL SANITARY LATERAL AND UTILITIES. COMPLETE STORM DRAINAGE SYSTEM.

15. INSTALL SITE LIGHTING AND TRASH ENCLOSURE.

16. COMPLETE GRADING TO SUBGRADES AND CONSTRUCT PARKING AREA SUBGRADE.

17. CONSTRUCT CURBS, PAVEMENT STRUCTURE AND SIDEWALKS.

18. CONDUCT FINE GRADING.

19. CONSTRUCT ANY REQUIRED OFF SITE ROADWAY AND SIGNAL IMPROVEMENTS.

20. PAVING OF PARKING AREAS AND DRIVEWAYS

21. FINAL FINE GRADING OF SLOPE AND NON-PAVED AREAS.

22. PLACE 4" TOPSOIL ON SLOPES AFTER FINAL GRADING IS COMPLETED. FERTILIZE SEED AND MULCH. SEED MIXTURE TO BE INSTALLED APRIL 15-JUNE 1 USE EROSION CONTROL BLANKETS AS REQUIRED OR ORDERED FOR SLOPES GREATER THAN 3:1 AND AS SHOWN ON LANDSCAPE PLANS OR EROSION CONTROL PLANS. FOR TEMPORARY STABILIZATION BEYOND SEEDING DATES USE ANNUAL RYE AT 4.0 LBS/1,000 S.F. FERTILIZE WITH 10-10-10 AT 1.0 LBS. OF NITROGEN PER 1,000 S.F. AND LIME AT 100 LBS./1,000 S.F. (MAX.).

23. LANDSCAPE ISLANDS, INTERIOR NON-PAVED AREAS, AND PERIMETER AREAS.

24. INSTALL SIGNING AND PAVEMENT MARKINGS

25. CLEAN STORM DRAINAGE PIPE STRUCTURES, DETENTION SYSTEMS AND WATER QUALITY DEVICES OF DEBRIS AND SEDIMENT.

26. UPON DIRECTION OF THE MUNICIPALITY AND/OR INLAND WETLANDS COMMISSION AGENT, SEDIMENT AND EROSION CONTROL MEASURES SHALL BE REMOVED FOLLOWING STABILIZATION OF THE SITE.

OPERATION REQUIREMENTS

CLEARING AND GRUBBING OPERATIONS
1. ALL SEDIMENT AND EROSION CONTROL MEASURES, INCLUDING THE CONSTRUCTION OF TEMPORARY SEDIMENTATION BASINS AND STONE CONSTRUCTION ENTRANCE ANTI-TRACKING PADS, WILL BE INSTALLED PRIOR TO THE START OF CLEARING AND GRUBBING AND DEMOLITION OPERATIONS.

2. FOLLOWING INSTALLATION OF ALL SEDIMENT AND EROSION CONTROL MEASURES, THE CONTRACTOR SHALL NOT PROCEED WITH GRADING, FILLING OR OTHER CONSTRUCTION OPERATIONS UNTIL THE ENGINEER HAS INSPECTED AND APPROVED ALL INSTALLATIONS.

3. THE CONTRACTOR SHALL TAKE EXTREME CARE DURING CLEARING AND GRUBBING OPERATIONS SO AS NOT TO DISTURB UNPROTECTED WETLAND AREAS OR SEDIMENT AND EROSION CONTROL DEVICES.

4. FOLLOWING THE COMPLETION OF CLEARING AND GRUBBING OPERATIONS, ALL AREAS SHALL BE STABILIZED WITH TOPSOIL AND SEEDING OR CRUSHED STONE AS SOON AS PRACTICAL.

ROUGH GRADING OPERATIONS

1. DURING THE REMOVAL AND/OR PLACEMENT OF EARTH AS INDICATED ON THE GRADING PLAN, TOPSOIL SHALL BE STRIPPED AND APPROPRIATELY STOCKPILED FOR REUSE.

2. ALL STOCKPILED TOPSOIL SHALL BE SEEDED, MULCHED WITH HAY, AND ENCLOSED BY A SILTATION FENCE.

FILLING OPERATIONS

1. PRIOR TO FILLING, ALL SEDIMENT AND EROSION CONTROL DEVICES SHALL BE PROPERLY IMPLEMENTED, MAINTAINED AND FULLY INSTALLED, AS DIRECTED BY THE ENGINEER AND AS SHOWN ON THIS PLAN.

2. ALL FILL MATERIAL ADJACENT TO ANY WETLAND AREAS, IF APPLICABLE TO THIS PROJECT, SHALL BE GOOD QUALITY, WITH LESS THAN 5% FINES PASSING THROUGH A #200 SIEVE (BANK RUN), SHALL BE PLACED IN LIFT THICKNESSES NOT GREATER THAN THAT SPECIFIED IN PROJECT SPECIFICATIONS AND/OR THE PROJECT GEOTECHNICAL REPORT. LIFTS SHALL BE COMPACTED TO 95% MAX. DRY DENSITY MODIFIED PROCTOR OR AS SPECIFIED IN THE CONTRACT SPECIFICATIONS OR IN THE GEOTECHNICAL REPORT.
3. AS GENERAL GRADING OPERATIONS PROGRESS, ANY TEMPORARY DIVERSION DITCHES SHALL BE RAISED OR LOWERED, AS NECESSARY, TO DIVERT SURFACE RUNOFF TO THE SEDIMENT BASINS OR SEDIMENT TRAPS.

PLACEMENT OF DRAINAGE STRUCTURES, UTILITIES, AND BUILDING CONSTRUCTION OPERATIONS.

1. SILT FENCES SHALL BE INSTALLED AT THE DOWNHILL SIDES OF BUILDING EXCAVATIONS, MUD PUMP DISCHARGES, AND UTILITY TRENCH MATERIAL STOCKPILES. HAY BALES/STRAW BALES MAY BE USED IF SHOWN ON THE SEDIMENT AND EROSION CONTROL PLANS OR IF DIRECTED BY THE CIVIL ENGINEER.

FINAL GRADING AND PAVING OPERATIONS

1. ALL INLET AND OUTLET PROTECTION SHALL BE PLACED AND MAINTAINED AS SHOWN ON SEDIMENT AND EROSION CONTROL PLANS AND DETAILS, AND AS DESCRIBED IN SPECIFICATIONS AND AS DESCRIBED HEREIN.

2. NO CUT OR FILL SLOPES SHALL EXCEED 2:1 EXCEPT WHERE STABILIZED BY ROCK FACED EMBANKMENTS OR EROSION CONTROL BLANKETS, OR JUTE MESH AND VEGETATION. ALL SLOPES SHALL BE SEEDED, AND ANY ROAD OR DRIVEWAY SHOULDER AND BANKS SHALL BE STABILIZED IMMEDIATELY UPON COMPLETION OF FINAL GRADING UNTIL TURF IS ESTABLISHED.

3. PAVEMENT SUB-BASE AND BASE COURSES SHALL BE INSTALLED OVER AREAS TO BE PAVED AS SOON AS FINAL SUB-GRADES ARE ESTABLISHED AND UNDERGROUND UTILITIES AND STORM DRAINAGE SYSTEMS HAVE BEEN INSTALLED.

4. AFTER CONSTRUCTION OF PAVEMENT, TOPSOIL, FINAL SEED, MULCH AND LANDSCAPING, REMOVE ALL TEMPORARY SEDIMENT AND EROSION CONTROL DEVICES ONLY AFTER ALL AREAS HAVE BEEN PAVED AND/OR GRASS HAS BEEN WELL ESTABLISHED AND THE SITE IS STABLE AND HAS BEEN INSPECTED AND APPROVED BY THE MUNICIPALITY AND/OR INLAND WETLANDS COMMISSION.

INSTALLATION OF SEDIMENTATION AND EROSION CONTROL MEASURES

I. SILTATION FENCE
A. DIG A SIX INCH TRENCH ON THE UPHILL SIDE OF THE DESIGNATED FENCE LINE LOCATION.

B. POSITION THE POST AT THE BACK OF THE TRENCH (DOWNHILL SIDE), AND HAMMER THE POST AT LEAST 1.5 FEET INTO THE GROUND.

C. LAY THE BOTTOM SIX INCHES OF THE FABRIC INTO THE TRENCH TO PREVENT UNDERMINING BY STORM WATER RUN-OFF.

D. BACKFILL THE TRENCH AND COMPACT.

II. HAY BALES/STRAW BALES
A. BALES SHALL BE PLACED IN A SINGLE ROW, LENGTHWISE, ORIENTED PARALLEL TO THE CONTOUR, WITH ENDS OF ADJACENT BALES TIGHTLY ABUTTING ONE ANOTHER.

B. BALES SHALL BE ENTRENCHED AND BACKFILLED. A TRENCH SHALL BE EXCAVATED THE WIDTH OF A BALE AND THE LENGTH OF THE PROPOSED BARRIER TO A MINIMUM DEPTH OF FOUR INCHES. AFTER THE BALES ARE STAKED, THE EXCAVATED SOIL SHALL BE BACKFILLED AGAINST THE BARRIER.

C. EACH BALE SHALL BE SECURELY ANCHORED BY AT LEAST TWO (2) STAKES.

D. THE GAPS BETWEEN BALES SHALL BE WEDGED WITH STRAW TO PREVENT WATER LEAKAGE.

E. THE BARRIER SHALL BE EXTENDED TO SUCH A LENGTH THAT THE BOTTOMS OF THE END BALES ARE HIGHER IN ELEVATION THAN THE TOP OF THE LOWEST MIDDLE BALE, TO ENSURE THAT RUN-OFF WILL FLOW EITHER THROUGH OR OVER THE BARRIER, BUT NOT AROUND IT.

OPERATION AND MAINTENANCE OF SEDIMENT AND EROSION CONTROL MEASURES
I. SILTATION FENCE
A. ALL SILTATION FENCES SHALL BE INSPECTED AS A MINIMUM WEEKLY OR AFTER EACH RAINFALL. ALL DETERIORATED FABRIC AND DAMAGED POSTS SHALL BE REPLACED AND PROPERLY REPOSITIONED IN ACCORDANCE WITH THIS PLAN.

B. SEDIMENT DEPOSITS SHALL BE REMOVED FROM BEHIND THE FENCE WHEN THEY REACH A MAXIMUM HEIGHT OF ONE FOOT.

II. HAY BALES/STRAW BALES
A. ALL HAY BALE/STRAW BALE RINGS SHALL BE INSPECTED FOLLOWING EACH RAINFALL. REPAIR OR REPLACEMENT SHALL BE PROMPTLY MADE AS NEEDED.

B. DEPOSITS SHALL BE REMOVED AND CLEANED-OUT IF ONE HALF OF THE ORIGINAL HEIGHT OF THE BALES BECOMES FILLED WITH SEDIMENT.

III. SEDIMENT BASINS/SEDIMENT TRAPS
A. CONTRACTOR TO KEEP WEEKLY CHECKLIST LOGS FOR INSPECTIONS OF ALL SEDIMENT AND EROSION CONTROL DEVICES AND HAVE THEM READILY AVAILABLE ON-SITE AT ALL TIMES FOR INSPECTION BY DEEP, LOCAL AUTHORITIES OR ENGINEER.

B. ALL SEDIMENT BASINS AND/OR SEDIMENT TRAPS SHALL BE INSPECTED FOLLOWING EACH RAINFALL. REPAIR OF SLOPES SHALL BE PROMPTLY MADE AS NEEDED.

C. SEDIMENT DEPOSITS SHALL BE REMOVED FROM SEDIMENT BASINS AND/OR SEDIMENT TRAPS WHEN THEY REACH A MAXIMUM HEIGHT OF ONE FOOT UNLESS OTHERWISE INDICATED ON THE EROSION CONTROL PLANS AND DETAILS TO BE AT A SPECIFIC ELEVATION PER CLEAN OUT MARKERS.

D. SEDIMENT SHALL BE DISPOSED OF ON-SITE OR AS DIRECTED BY THE ENGINEER AND LOCAL GOVERNING OFFICIALS. SEE SEDIMENT AND EROSION CONTROL NOTES HEREIN REGARDING DISPOSAL REQUIREMENTS FOR OFF SITE SPOIL DISPOSAL.

SEDIMENT AND EROSION CONTROL PLAN
1. HAY BALE/STRAW BALE FILTERS WILL BE INSTALLED AT ALL CULVERT OUTLETS IF CULVERT OUTLETS ARE APPLICABLE TO THIS PROJECT AND SILTATION FENCE INSTALLED ALONG THE TOE OF ALL CRITICAL CUT AND FILL SLOPES.

2. CULVERT DISCHARGE AREAS WILL BE PROTECTED WITH RIP RAP CHANNELS. ENERGY DISSIPATORS WILL BE INSTALLED AS SHOWN ON THESE PLANS AND AS NECESSARY.

3. CATCH BASINS WILL BE PROTECTED WITH HAY BALE/STRAW BALE FILTERS, SILT SACKS, SILTATION FENCE, OR OTHER INLET PROTECTION DEVICES PER DETAILS, THROUGHOUT THE CONSTRUCTION PERIOD AND UNTIL ALL DISTURBED AREAS ARE THOROUGHLY STABILIZED.

4. ALL SEDIMENT AND EROSION CONTROL MEASURES WILL BE INSTALLED IN ACCORDANCE WITH THE STANDARDS AND SPECIFICATIONS OF THE CONNECTICUT SEDIMENTATION AND EROSION CONTROL GUIDELINES LATEST EDITION.

5. SEDIMENT AND EROSION CONTROL MEASURES WILL BE INSTALLED PRIOR TO DEMOLITION AND/OR CONSTRUCTION WHENEVER POSSIBLE.

6. ALL CONTROL MEASURES WILL BE MAINTAINED IN EFFECTIVE CONDITION THROUGHOUT THE DEMOLITION AND CONSTRUCTION PERIOD UNTIL THE SITE IS DETERMINED TO BE STABILIZED BY THE AUTHORITY HAVING JURISDICTION.

7. ADDITIONAL CONTROL MEASURES WILL BE INSTALLED DURING THE CONSTRUCTION PERIOD, IF NECESSARY OR REQUIRED OR AS DIRECTED BY THE CIVIL ENGINEER OR BY THE AUTHORITY HAVING JURISDICTION.

8. SEDIMENT REMOVED FROM EROSION CONTROL STRUCTURES WILL BE DISPOSED IN A MANNER WHICH IS CONSISTENT WITH THE INTENT AND REQUIREMENTS OF THE SEDIMENT AND EROSION CONTROL PLANS, NOTES, AND DETAILS.

9. THE OWNER AND OWNERS CONSTRUCTION REPRESENTATIVE IS ASSIGNED THE RESPONSIBILITY FOR IMPLEMENTING THIS SEDIMENT AND EROSION CONTROL PLAN. THIS RESPONSIBILITY INCLUDES THE INSTALLATION AND MAINTENANCE OF CONTROL MEASURES, INFORMING ALL PARTIES ENGAGED ON THE CONSTRUCTION SITE OF THE REQUIREMENTS AND OBJECTIVES OF THE PLAN, NOTIFICATION OF THE MUNICIPALITY AND/OR INLAND WETLANDS COMMISSION OFFICE OR AUTHORITY HAVING JURISDICTION OF ANY TRANSFER OF THIS RESPONSIBILITY AND FOR CONVEYING A COPY OF THE SEDIMENT AND EROSION CONTROL PLAN IF THE TITLE TO THE LAND IS TRANSFERRED.

SEDIMENT AND EROSION CONTROL NOTES
1. THE SEDIMENT AND EROSION CONTROL PLAN IS ONLY INTENDED TO DESCRIBE THE SEDIMENT AND EROSION CONTROL TREATMENT FOR THIS SITE. SEE SEDIMENT AND EROSION CONTROL DETAILS AND CONSTRUCTION SEQUENCE. REFER TO SITE PLAN FOR GENERAL INFORMATION AND OTHER CONTRACT PLANS FOR APPROPRIATE INFORMATION.

2. THE OWNER AND OWNERS CONSTRUCTION REPRESENTATIVE IS RESPONSIBLE FOR IMPLEMENTING THIS SEDIMENT AND EROSION CONTROL PLAN, AND CAN BE REACHED BY PHONE. THIS RESPONSIBILITY INCLUDES THE PROPER INSTALLATION AND MAINTENANCE OF SEDIMENT AND EROSION CONTROL MEASURES, INFORMING ALL PARTIES ENGAGED WITH CONSTRUCTION ON THE SITE OF THE REQUIREMENTS AND OBJECTIVES OF THIS PLAN, INFORMING THE AUTHORITY HAVING JURISDICTION OR COUNTY SOILS CONSERVATION DISTRICT OR INLAND WETLANDS AGENCY OF ANY TRANSFER OF THIS RESPONSIBILITY, AND FOR CONVEYING A COPY OF THE SEDIMENT & EROSION CONTROL PLAN IF THE TITLE TO THE LAND IS TRANSFERRED.

3. AN EROSION CONTROL BOND MAY BE REQUIRED TO BE POSTED WITH THE TOWN OF SOUTH WINDSOR TO ENSURE IMPLEMENTATION OF THE SEDIMENT AND EROSION CONTROL MEASURES. THE CONTRACTOR SHALL BE RESPONSIBLE FOR THE POSTING OF THIS BOND AND FOR INQUIRIES TO THE TOWN OF SOUTH WINDSOR FOR INFORMATION ON THE METHOD, TYPE AND AMOUNT OF THE BOND POSTING UNLESS OTHERWISE DIRECTED BY THE OWNER.

4. VISUAL SITE INSPECTIONS SHALL BE CONDUCTED WEEKLY, AND AFTER EACH MEASURABLE PRECIPITATION EVENT OF 0.25 INCHES OR GREATER BY QUALIFIED PERSONNEL, TRAINED AND EXPERIENCED IN SEDIMENT AND EROSION CONTROL, TO ASCERTAIN THAT THE SEDIMENT AND EROSION CONTROL (E&S) BMPS ARE OPERATIONAL AND EFFECTIVE IN PREVENTING POLLUTION. A WRITTEN REPORT OF EACH INSPECTION SHALL BE KEPT, AND INCLUDE:
A)A SUMMARY OF THE SITE CONDITIONS, E&S BMPS, AND COMPLIANCE; AND
B)THE DATE, TIME, AND THE NAME OF THE PERSON CONDUCTING THE INSPECTION
C)TURBIDITY TESTING AS REQUIRED BY THE GENERAL PERMIT (NPDES).

5. THE CONTRACTOR SHALL CONSTRUCT ALL SEDIMENT AND EROSION CONTROLS IN ACCORDANCE WITH CONNECTICUT EROSION AND SEDIMENTATION DESIGN BOOK LATEST EDITION IN ACCORDANCE WITH THE CONTRACT DOCUMENTS, AND AS DIRECTED BY THE MUNICIPALITY AND/OR INLAND WETLANDS COMMISSION. THE CONTRACTOR SHALL KEEP A COPY OF THE GUIDELINES ON-SITE FOR REFERENCE DURING CONSTRUCTION.

6. ADDITIONAL AND/OR ALTERNATIVE SEDIMENT AND EROSION CONTROL MEASURES MAY BE INSTALLED DURING THE CONSTRUCTION PERIOD IF FOUND NECESSARY BY THE CONTRACTOR, OWNER, SITE ENGINEER, MUNICIPALITY AND/OR INLAND WETLANDS COMMISSION, OR GOVERNING AGENCIES. THE CONTRACTOR SHALL CONTACT THE OWNER AND APPROPRIATE GOVERNING AGENCIES FOR APPROVAL IF ALTERNATIVE CONTROLS OTHER THAN THOSE SHOWN ON THE PLANS ARE PROPOSED.

7. THE CONTRACTOR SHALL INSPECT ALL SEDIMENT AND EROSION CONTROLS BEFORE AND AFTER EACH STORM (0.25 INCHES OR GREATER RAINFALL), OR AT LEAST WEEKLY, TO VERIFY THAT THE CONTROLS ARE OPERATING PROPERLY AND MAKE REPAIRS WHERE NECESSARY.

8. THE CONTRACTOR SHALL KEEP A SUPPLY OF SEDIMENT AND EROSION CONTROL MATERIAL (HAY BALES, SILT FENCE, JUTE MESH, RIP RAP, ETC.) ON-SITE FOR MAINTENANCE AND EMERGENCY REPAIRS.

9. PROTECT EXISTING TREES THAT ARE TO BE SAVED BY FENCING AT THE DRIP LINE OR AS SHOWN WITH SNOW FENCE, ORANGE SAFETY FENCE, OR EQUIVALENT FENCING. ANY LIMB TRIMMING SHOULD BE DONE BEFORE CONSTRUCTION BEGINS IN THAT AREA; FENCING SHALL BE MAINTAINED AND REPAIRED DURING CONSTRUCTION.

10. INSTALL PERIMETER SEDIMENT AND EROSION CONTROLS PRIOR TO CLEARING OR CONSTRUCTION. ALL CONSTRUCTION SHALL BE CONTAINED WITHIN THE LIMIT OF DISTURBANCE, WHICH SHALL BE MARKED WITH SILT FENCE, SAFETY FENCE, HAY BALES, RIBBONS, OR OTHER MEANS PRIOR TO CLEARING. CONSTRUCTION ACTIVITY SHALL REMAIN ON THE UPHILL SIDE OF THE SILT FENCE UNLESS WORK IS SPECIFICALLY CALLED FOR ON THE DOWNHILL SIDE OF THE FENCE.

11. STONE CONSTRUCTION ENTRANCE ANTI-TRACKING PADS SHALL BE INSTALLED AT START OF CONSTRUCTION AND MAINTAINED THROUGHOUT THE DURATION OF CONSTRUCTION. THE LOCATION OF THE TRACKING PADS MAY CHANGE AS VARIOUS PHASES OF CONSTRUCTION ARE COMPLETED.

12. TOPSOIL SHALL BE STRIPPED AND STOCKPILED FOR USE IN FINAL LANDSCAPING. ALL EARTH STOCKPILES SHALL HAVE HAY BALES OR SILT FENCE AROUND THE LIMIT OF PILE. PILES SHALL BE TEMPORARILY SEEDED IF PILE IS TO REMAIN IN PLACE FOR MORE THAN ONE (1) MONTH.

13. SEDIMENT BASINS AND SEDIMENT TRAPS SHALL PROVIDE 134 CUBIC YARDS OF SEDIMENT STORAGE PER ACRE CONTRIBUTING TO THE BASIN. PROVIDE BASIN VOLUMES FOR ALL DISTURBANCE ON SITE.

14. COMPLY WITH REQUIREMENTS OF CGS SECTION 22A 430B , FOR STORMWATER DISCHARGE FROM CONSTRUCTION ACTIVITIES AND WITH DEEP RECORD KEEPING AND INSPECTION REQUIREMENTS.

15. STONE CONSTRUCTION ENTRANCE ANTI-TRACKING PADS SHALL BE INSTALLED PRIOR TO ANY ON SITE EXCAVATION AND SHALL BE MAINTAINED DURING ALL DEMOLITION, EXCAVATION AND CONSTRUCTION ACTIVITIES.

16. MINIMIZE LAND DISTURBANCES. SEED AND MULCH DISTURBED AREAS WITH TEMPORARY MIX AS SOON AS PRACTICABLE (ONE WEEK MAXIMUM UNSTABILIZED PERIOD) USING PERENNIAL RYEGRASS AT 40 LBS PER ACRE. MULCH ALL CUT AND FILL SLOPES AND SWALES WITH LOOSE HAY AT A RATE OF 2 TONS PER ACRE. IF NECESSARY, REPLACE LOOSE HAY ON SLOPES WITH EROSION CONTROL BLANKETS OR JUTE CLOTH. MODERATELY GRADED AREAS, ISLANDS, AND TEMPORARY CONSTRUCTION STAGING AREAS MAY BE HYDROSEEDED WITH TACKIFIER.

17. MAINTAIN EXISTING PAVED AREAS FOR CONSTRUCTION STAGING FOR AS LONG AS POSSIBLE.

18. SILT FENCE AND OTHER SEDIMENT AND EROSION CONTROL MEASURES SHALL BE INSTALLED IN ACCORDANCE WITH CONTRACT DRAWINGS AND MANUFACTURER'S RECOMMENDATIONS PRIOR TO WORK IN ANY UPLAND AREAS.

19. EXCAVATED MATERIAL FROM TEMPORARY SILT TRAPS MUST BE STOCKPILED ON UPHILL SIDE OF SILT FENCE.

20. INSTALL SILT FENCE ACCORDING TO MANUFACTURER'S INSTRUCTION, PARTICULARLY, BURY LOWER EDGE OF FABRIC INTO GROUND. SILT FENCE SHALL BE TENCATE ENVIROFENCE, PROPEX GEOTEX OR EQUIVALENT APPROVED BY THE CIVIL ENGINEER. FILTER FABRIC USED SHALL BE TENCATE 140N OR 170N, OR APPROVED EQUIVALENT. SEE SPECIFICATIONS FOR FURTHER INFORMATION.

21. WHERE INDICATED ON SEDIMENT AND EROSION CONTROL PLANS USE NEW HAY/STRAW BALES AND REPLACE THEM WHENEVER THEIR CONDITION DETERIORATES BEYOND REASONABLE USABILITY. STAKE BALES SECURELY INTO GROUND AND BUTT TIGHTLY TOGETHER TO PREVENT UNDERCUTTING AND BYPASSING.

22. INSTALL TEMPORARY DIVERSION DITCHES, PLUNGE POOLS, SEDIMENT BASINS, SEDIMENT TRAPS, CONCRETE WASH PITS AND DEWATERING PITS AS SHOWN AND AS NECESSARY DURING VARIOUS PHASES OF CONSTRUCTION TO CONTROL RUNOFF UNTIL UPHILL AREAS ARE DETERMINED TO BE STABILIZED BY THE AUTHORITY HAVING JURISDICTION. LOCATION OF TEMPORARY SEDIMENT BASINS WILL REQUIRE REVIEW AND APPROVAL BY THE CIVIL ENGINEER AND AUTHORITY HAVING JURISDICTION.

23. DIRECT ALL DEWATERING PUMP DISCHARGE TO A SEDIMENT CONTROL DEVICE SUCH AS TEMPORARY PITS, SEDIMENT TRAP, SEDIMENT BASINS OR GRASS FILTERS WITHIN THE APPROVED LIMIT OF DISTURBANCE. DISCHARGE TO STORM DRAINAGE SYSTEM OR SURFACE WATERS FROM SEDIMENT CONTROLS SHALL BE CLEAR.

24. BLOCK END OF STORM SEWERS IN EXPOSED TRENCHES WITH BOARDS AND SANDBAGS AT THE END OF EACH WORKING DAY WHEN RAIN IS EXPECTED.

25. SWEEP AFFECTED PORTIONS OF OFF SITE ROADS ONE OR MORE TIMES A DAY (OR LESS FREQUENTLY IF TRACKING IS NOT A PROBLEM) DURING CONSTRUCTION. OTHER DUST CONTROL MEASURES TO BE USED AS NECESSARY INCLUDE WATERING DOWN DISTURBED AREAS, USING CALCIUM CHLORIDE, AND COVERING LOADS ON DUMP TRUCKS.

26. PERIODICALLY CHECK ACCUMULATED SEDIMENT LEVELS IN THE SEDIMENT BASINS AND SEDIMENT TRAPS DURING CONSTRUCTION AND CLEAN ACCUMULATED SILT WHEN NECESSARY OR WHEN ONE FOOT OF SEDIMENT HAS ACCUMULATED OR PER SPECIFIC CLEANOUT MARKER ELEVATION. CLEAN ACCUMULATED SEDIMENT FROM CATCH BASIN SUMPS AS NECESSARY AND AS DIRECTED BY THE CIVIL ENGINEER OR OWNER'S CONSTRUCTION REPRESENTATIVE. REMOVE ACCUMULATED SEDIMENT FROM BEHIND HAY/STRAW BALES AND SILT FENCE WHEN LEVEL REACHES HALF THE HEIGHT OF THE BALE OR ONE FOOT AT SILT FENCE. DISPOSE OF SEDIMENT LEGALLY EITHER ON OR OFF SITE.

27. IMMEDIATELY UPON DISCOVERING UNFORESEEN CIRCUMSTANCES POSING THE POTENTIAL FOR ACCELERATED EROSION AND/OR SEDIMENT POLLUTION, THE OPERATOR SHALL IMPLEMENT APPROPRIATE BEST MANAGEMENT PRACTICES TO ELIMINATE THE POTENTIAL FOR ACCELERATED EROSION AND/OR SEDIMENT POLLUTION.

28. ALL PUMPING OF SEDIMENT LADEN WATER SHALL BE THROUGH A SEDIMENT CONTROL BMP, SUCH AS A PUMPED WATER FILTER BAG OR EQUIVALENT SEDIMENT REMOVAL FACILITY, OVER UNDISTURBED VEGETATED AREAS.

29. ALL EXCAVATED MATERIAL SHALL BE PLACED ON THE HIGH SIDE OF UTILITY AND STORM PIPE TRENCHES SO AS TO ALLOW THE TRENCH TO INTERCEPT ALL SILT LADEN RUNOFF.

30. CONTRACTOR SHALL ONLY EXCAVATE AS MUCH UTILITY AND STORM PIPE TRENCH WORK AS CAN BE COMPLETED, BACKFILLED AND STABILIZED IN ONE DAY SO AS TO LIMIT THE AMOUNT OF OPEN, DISTURBED TRENCHING.

31. ANY STOCKPILES OF STRIPPED MATERIALS ARE TO BE PERIODICALLY SPRAYED WITH WATER OR A CRUSTING AGENT TO STABILIZE POTENTIALLY WIND-BLOWN MATERIAL. HAUL ROADS BOTH INTO AND AROUND THE SITE ARE TO BE SPRAYED AS NEEDED TO SUPPRESS DUST. TRUCKS HAULING IMPORT FILL MATERIAL ARE TO BE TARPED TO AID IN THE CONTROL OF AIRBORNE DUST. DURING HIGH WIND EVENTS (20 TO 30 MPH SUSTAINED) CONSTRUCTION ACTIVITY SHALL BE LIMITED OR CEASED IF DUST CANNOT BE CONTROLLED BY WETTING.

32. AN AREA SHALL BE CONSIDERED TO HAVE ACHIEVED FINAL STABILIZATION WHEN IT HAS A MINIMUM OF 70% UNIFORM PERENNIAL VEGETATIVE COVER OR OTHER PERMANENT NON-VEGETATIVE COVER WITH A DENSITY SUFFICIENT TO RESIST ACCELERATED SURFACE EROSION AND SUBSURFACE CHARACTERISTICS SUFFICIENT TO RESIST SLIDING OR OTHER MOVEMENTS UNLESS OTHERWISE DETERMINED BY THE AUTHORITY HAVING JURISDICTION.

33. MAINTAIN ALL PERMANENT AND TEMPORARY EROSION AND SEDIMENT CONTROL DEVICES IN EFFECTIVE CONDITION THROUGHOUT THE CONSTRUCTION PERIOD. UPON COMPLETION OF WORK SWEEP PARKING LOT AND REMOVE ALL TEMPORARY EROSION AND SEDIMENT CONTROLS WHEN AUTHORIZED BY AUTHORITY HAVING JURISDICTION. FILE NOT (NOTICE OF TERMINATION) WITH AUTHORITY HAVING JURISDICTION RESPONSIBLE FOR REGULATING STORM WATER DISCHARGES FROM CONSTRUCTION ACTIVITIES PER NPDES.

FOR PERMITTING PURPOSES ONLY
NOT RELEASED FOR CONSTRUCTION

Architecture
Engineering
Environmental
Land Surveying
BL Companies
355 Research Parkway
Meriden, CT 06450
(203) 630-1406
(203) 630-2615 Fax

STATE OF CONNECTICUT
MATTHEW T. BUDNY
No. 28,359
LICENSED
PROFESSIONAL ENGINEER

PROPOSED WAREHOUSE
240 ELLIN

LANDSCAPE PLANT SCHEDULE						
TREES						
KEY	QTY	BOTANICAL NAME	COMMON NAME	ROOT	SIZE	COMMENTS
GT	15	GLEDITSIA TRIACANTHOS VAR. INERMIS 'SHADEMASTER'	Shademaster Honeylocust	B&B	2"–2.5" CAL.	
TC	3	TILIA CORDATA 'GREENSPIRE'	Greenspire Linden	B&B	2"–2.5" CAL.	
ZS	7	ZELKOVA SERRATA 'GREEN VASE'	Green Vase Zelkova	B&B	2"–2.5" CAL.	
PA	12	PICEA ABIES	Norway Spruce	B&B	7'–8' HT.	PLANT 10' O.C.
PS	12	PINUS STROBUS	Eastern White Pine	B&B	7'–8' HT.	PLANT 10' O.C.

NOTES:
1) ALL SUBSTITUTIONS MUST RECEIVE APPROVAL FROM THE LANDSCAPE ARCHITECT PRIOR TO DELIVERY TO SITE.

2) PROVIDE AND INSTALL ALL PLANTS SHOWN ON THE PLANTING PLAN DRAWINGS; THE QUANTITIES IN THE PLANT LIST ARE PROVIDED FOR THE CONTRACTOR'S CONVENIENCE ONLY. IF DISCREPANCIES OCCUR, THE LARGER QUANTITY SHALL APPLY.

3) IF THERE IS A DISCREPANCY BETWEEN BOTANICAL AND COMMON NAME, BOTANICAL NAME PREVAILS.

ZONING INFORMATION

ITEM #	ITEM	REQUIREMENTS	PROPOSED	VARIANCE
1	PARKING AREA LANDSCAPING	FOR EVERY 10 PARKING SPACES, A MINIMUM OF 1 TREE OF AT LEAST 3"CALIPER MUST BE PLANTED.	390 PARKING SPACES REQUIRED = 39 TREES EXISTING = 140 TREES PROPOSED = 49 TREES	NO

LANDSCAPE PLAN LEGEND

- PROPERTY LINE
- LOD — LIMITS OF DISTURBANCE LINE AND CONTRACT LIMIT LIMIT LINE
- PROVIDE AND INSTALL DECIDUOUS CANOPY TREE
- PROVIDE AND INSTALL EVERGREEN TREE
- EXISTING TREE TO REMAIN
- S — EXISTING TREE TO REMAIN AND BE PROTECTED
- R — EXISTING TREE TO BE RELOCATED
- PROVIDE AND INSTALL LAWN SEED MIX

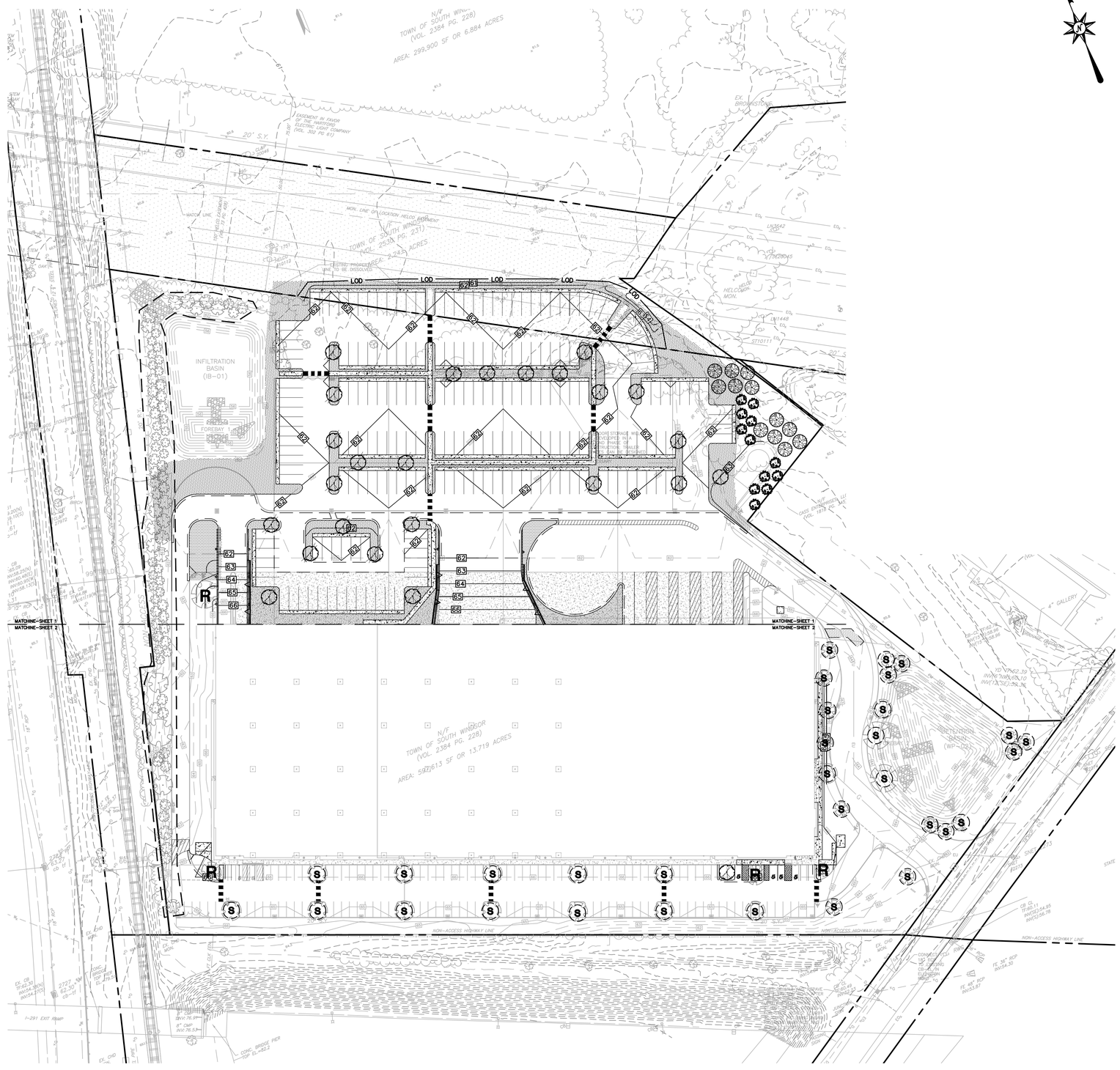

SEE SHEET LL-3 & LL-4 FOR LANDSCAPE NOTES AND DETAILS

FOR PERMITTING PURPOSES ONLY
NOT RELEASED FOR CONSTRUCTION

GRAPHIC SCALE
60 30 0 60
SCALE IN FEET

Architecture
Engineering
Environmental
Land Surveying
BL Companies
355 Research Parkway
Meriden, CT 06450
(203) 630-1406
(203) 630-2615 Fax

STATE OF CONNECTICUT
MATTHEW J. BUTCH
No. 20288
LICENSED PROFESSIONAL ENGINEER

PROPOSED WAREHOUSE
240 ELLINGTON ROAD
SOUTH WINDSOR, HARTFORD COUNTY, CONNECTICUT

REVISIONS

No.	Date	Desc.

Designed	W.E.V.
Drawn	W.E.V.
Reviewed	
Scale	1"=60'
Project No.	2001166
Date	11/20/2020
CAD File: LL200116601	

Title
OVERALL LANDSCAPE PLAN

Sheet No.
OLL-1

Xref (s): : BD200116601 ; XC200116601 ; XC200116601 ; XC200116602 ; XL200116601

© 2020 BL COMPANIES, INC. THESE DRAWINGS SHALL NOT BE UTILIZED BY ANY PERSON, FIRM OR CORPORATION WITHOUT THE SPECIFIC WRITTEN PERMISSION OF BL COMPANIES.

LANDSCAPE PLANT SCHEDULE		
TREES		
KEY	BOTANICAL NAME	COMMON NAME
GT	GLEDITSIA TRIACANTHOS VAR. INERMIS 'SHADEMASTER'	Shademaster Honeylocust
TC	TILIA CORDATA 'GREENSPIRE'	Greenspire Linden
ZS	ZELKOVA SERRATA 'GREEN VASE'	Green Vase Zelkova
PA	PICEA ABIES	Norway Spruce
PS	PINUS STROBUS	Eastern White Pine

LANDSCAPE PLAN LEGEND

- PROPERTY LINE
- LIMITS OF DISTURBANCE LINE AND CONTRACT LIMIT LIMIT LINE
- PROVIDE AND INSTALL DECIDUOUS CANOPY TREE
- PROVIDE AND INSTALL EVERGREEN TREE
- EXISTING TREE TO REMAIN
- EXISTING TREE TO REMAIN AND BE PROTECTED
- EXISTING TREE TO BE RELOCATED
- PROVIDE AND INSTALL LAWN SEED MIX

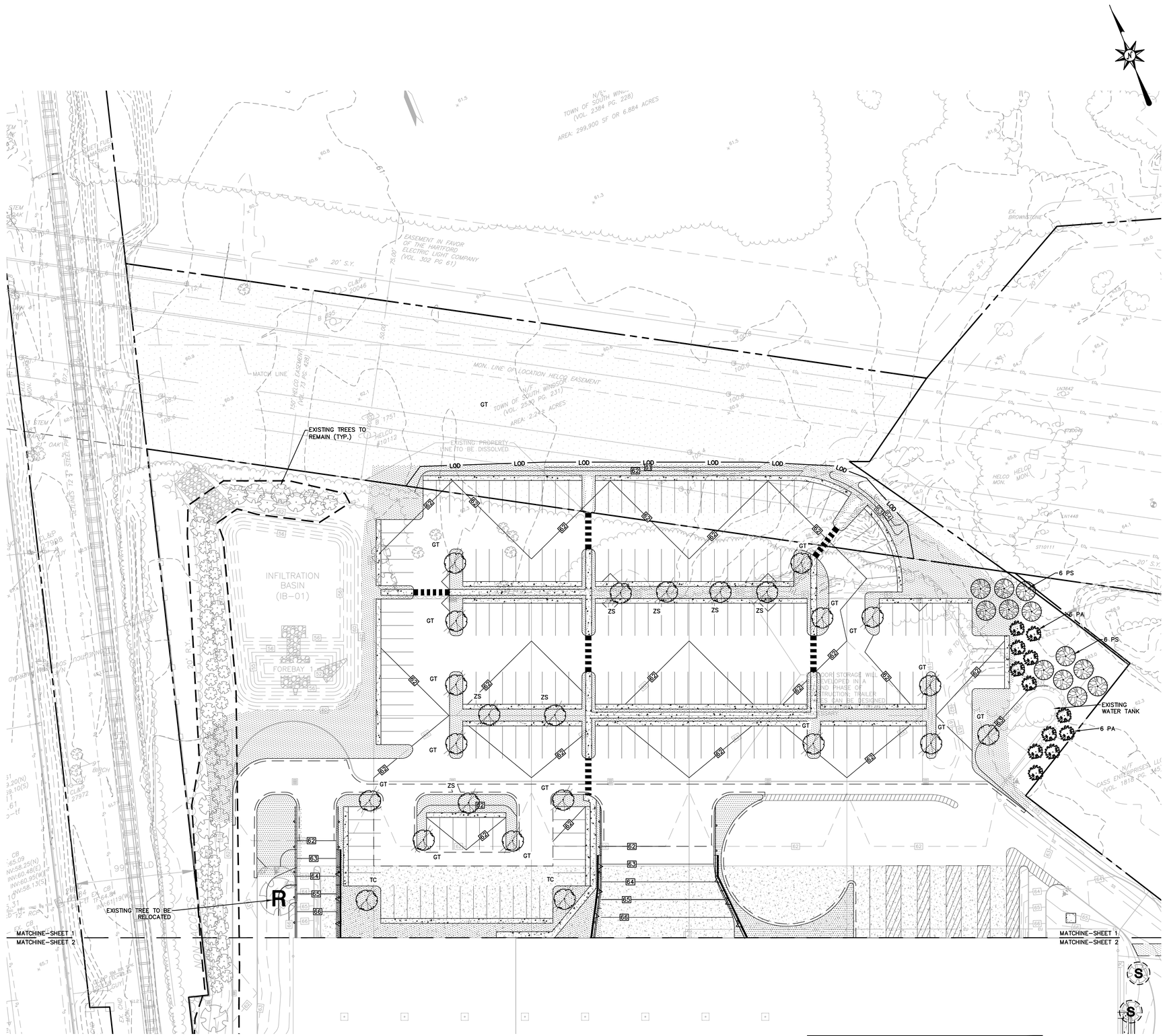

SEE SHEET LL-3 & LL-4 FOR LANDSCAPE NOTES AND DETAILS

FOR PERMITTING PURPOSES ONLY NOT RELEASED FOR CONSTRUCTION

GRAPHIC SCALE
40 20 0 40
SCALE IN FEET

Architecture
Engineering
Environmental
Land Surveying
BL Companies
355 Research Parkway
Meriden, CT 06450
(203) 630-1406
(203) 630-2615 Fax

STATE OF CONNECTICUT
MATTHEW T. BUTCH
No. 22584
LICENSED
PROFESSIONAL ENGINEER

PROPOSED WAREHOUSE
240 ELLINGTON ROAD
SOUTH WINDSOR, HARTFORD COUNTY, CONNECTICUT

REVISIONS

No.	Date	Desc.

Designed	W.E.V.
Drawn	W.E.V.
Reviewed	
Scale	1"=40'
Project No.	2001166
Date	11/20/2020
CAD File: LL200116601	

Title
LANDSCAPE PLAN

Sheet No.
LL-1

Xref (s): B200116601 ; XZ200116601 ; XC200116601 ; XC200116602 ; XL200116601

11/20/2020, VTRAVIS, G:\JOBS30\10\2001166\DWG\LL2001166\1.DWG\LL-1 24X36.ADC

© 2020 BL COMPANIES, INC. THESE DRAWINGS SHALL NOT BE UTILIZED BY ANY PERSON, FIRM OR CORPORATION WITHOUT THE SPECIFIC WRITTEN PERMISSION OF BL COMPANIES.

LANDSCAPE PLAN LEGEND

PROPERTY LINE

LOD — LIMITS OF DISTURBANCE LINE AND CONTRACT LIMIT LIMIT LINE

PROVIDE AND INSTALL DECIDUOUS CANOPY TREE

PROVIDE AND INSTALL EVERGREEN TREE

EXISTING TREE TO REMAIN

S — EXISTING TREE TO REMAIN AND BE PROTECTED

R — EXISTING TREE TO BE RELOCATED

PROVIDE AND INSTALL LAWN SEED MIX

LANDSCAPE PLANT SCHEDULE

TREES

KEY	BOTANICAL NAME	COMMON NAME
GT	GLEDITSIA TRIACANTHOS VAR. INERMIS 'SHADEMASTER'	Shademaster Honeylocust
TC	TILIA CORDATA 'GREENSPIRE'	Greenspire Linden
ZS	ZELKOVA SERRATA 'GREEN VASE'	Green Vase Zelkova
PA	PICEA ABIES	Norway Spruce
PS	PINUS STROBUS	Eastern White Pine

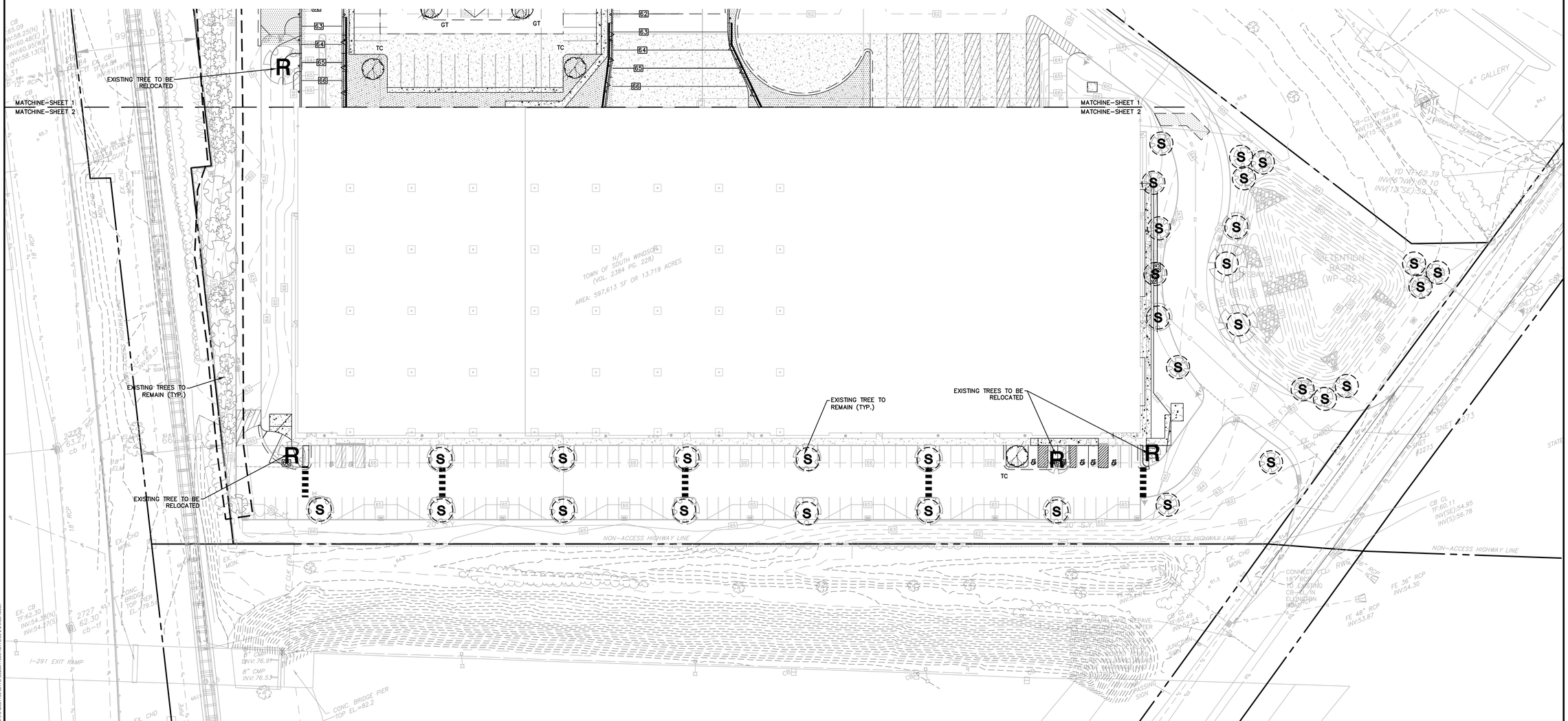

SEE SHEET LL-3 & LL-4 FOR LANDSCAPE NOTES AND DETAILS

FOR PERMITTING PURPOSES ONLY NOT RELEASED FOR CONSTRUCTION

GRAPHIC SCALE
40 20 0 40
SCALE IN FEET

© 2020 BL COMPANIES, INC. THESE DRAWINGS SHALL NOT BE UTILIZED BY ANY PERSON, FIRM OR CORPORATION WITHOUT THE SPECIFIC WRITTEN PERMISSION OF BL COMPANIES.

Architecture
Engineering
Environmental
Land Surveying
BL Companies
355 Research Parkway
Meriden, CT 06450
(203) 630-1406
(203) 630-2615 Fax

STATE OF CONNECTICUT
MATTHEW J. BUDNY
No. 20246
LICENSED PROFESSIONAL ENGINEER

PROPOSED WAREHOUSE
240 ELLINGTON ROAD
SOUTH WINDSOR, HARTFORD COUNTY, CONNECTICUT

REVISIONS

No.	Date	Desc.

Designed	W.E.V.
Drawn	W.E.V.
Reviewed	
Scale	1"=40'
Project No.	2001166
Date	11/20/2020
CAD File: LL200116601	

Title
LANDSCAPE PLAN

Sheet No.
LL-2

Xref (s) : BD200116601 ; XZ200116601 ; XC200116601 ; XC200116602 ; XL200116601

LANDSCAPE NOTES

1. THE LANDSCAPE PLAN AND DETAIL SHEET ARE FOR LANDSCAPING INFORMATION ONLY. REFER TO THE SITE PLAN, GRADING AND DRAINAGE PLAN, SITE UTILITIES PLAN, LIGHTING PLAN AND DEMOLITION PLAN FOR ALL OTHER INFORMATION.

2. COORDINATE PLANT MATERIAL LOCATIONS WITH SITE UTILITIES. UTILITY LOCATIONS SHOWN ON THE DRAWINGS ARE APPROXIMATE. EXERCISE CARE WHEN DIGGING IN AREAS OF POTENTIAL CONFLICT WITH UNDERGROUND OR OVERHEAD UTILITIES. THE CONTRACTOR IS RESPONSIBLE FOR ANY DAMAGE DUE TO CONTRACTOR'S NEGLIGENCE AND SHALL REPLACE OR REPAIR ANY DAMAGE AT CONTRACTOR'S EXPENSE.

3. THE LOCATIONS FOR PLANT MATERIAL ARE APPROXIMATE AND ARE SUBJECT TO FIELD ADJUSTMENT DUE TO UTILITY LOCATIONS AND SITE CONDITIONS. THE CONTRACTOR SHALL ACCURATELY STAKE OUT THE LOCATIONS FOR ALL PLANTS FOR THE REVIEW, ADJUSTMENT, AND APPROVAL BY OWNER OR LANDSCAPE ARCHITECT PRIOR TO PLANTING.

4. THE CONTRACTOR SHALL GUARANTEE THAT ALL PLANTS SHALL BE HEALTHY AND FREE OF DISEASE FOR A PERIOD OF ONE YEAR OR JUNE 1ST OF THE YEAR FOLLOWING INSTALLATION, WHICHEVER IS LONGER, AFTER SUBSTANTIAL COMPLETION AND ACCEPTANCE BY OWNER OR LANDSCAPE ARCHITECT. CONTRACTOR SHALL REPLACE ANY DEAD OR UNHEALTHY PLANTS AT CONTRACTOR'S EXPENSE. PLANT MATERIAL REPLACEMENTS SHALL BE GUARANTEED FOR ONE FULL YEAR FROM DATE OF REPLACEMENT. REPLACEMENT PLANTS SHALL BE THE SAME AS SPECIFIED FOR THE ORIGINAL PLANTING. REPLACEMENTS SHALL BE MADE AS MANY TIMES AS NECESSARY TO ENSURE HEALTHY PLANTS. FINAL ACCEPTANCE SHALL BE MADE IF ALL PLANTS MEET THE GUARANTEE REQUIREMENTS INCLUDING MAINTENANCE. MAINTENANCE RESPONSIBILITIES INCLUDE CULTIVATING, SPRAYING, WEEDING, WATERING, TIGHTENING GUYS, PRUNING, FERTILIZING, MULCHING, AND ANY OTHER OPERATIONS NECESSARY TO MAINTAIN PLANT VIABILITY. MAINTENANCE SHALL BEGIN IMMEDIATELY AFTER PLANTING AND CONTINUE UNTIL THE END OF THE GUARANTEE PERIOD. DURING THE LANDSCAPE MAINTENANCE PERIOD (GUARANTEE) THE LANDSCAPE CONTRACTOR SHALL NOTIFY THE OWNER IN WRITING OF ANY SITE CONSTRAINTS (PHYSICAL, ENVIRONMENT, ETC.) OR MAINTENANCE DEFICIENCIES THAT MAY AFFECT LANDSCAPE VEGETATION ESTABLISHMENT.

5. THE CONTRACTOR SHALL SUPPLY ALL LABOR, PLANTS, AND MATERIALS IN QUANTITIES SUFFICIENT TO COMPLETE THE WORK SHOWN ON THE DRAWINGS AND LISTED IN THE PLANT SCHEDULE. IN THE EVENT OF A DISCREPANCY BETWEEN QUANTITIES SHOWN IN THE PLANT SCHEDULE AND THOSE REQUIRED BY THE DRAWINGS, THE LARGER SHALL APPLY. ALL PLANTS SHALL BE ACCLIMATED BY THE SUPPLY NURSERY TO THE LOCAL HARDINESS ZONE AND BE CERTIFIED THAT THE PLANTING MATERIAL HAS BEEN GROWN FOR A MINIMUM OF TWO YEARS AT THE SOURCE AND OBTAINED WITHIN 200 MILES OF PROJECT SITE UNLESS OTHERWISE APPROVED BY OWNER OR LANDSCAPE ARCHITECT.

6. PLANTS SHALL HAVE TAGS THAT IDENTIFY PLANT GENUS, SPECIES, CULTIVAR (IF APPLICABLE), PLANT COMMON NAME, NAME OF SOURCE NURSERY, AND SIZE OF PLANT FOR REVIEW OF OWNER OR LANDSCAPE ARCHITECT.

7. NO PLANT SHALL BE PLACED IN THE GROUND BEFORE ROUGH GRADING HAS BEEN COMPLETED AND APPROVED BY THE OWNER OR LANDSCAPE ARCHITECT. STAKING THE LOCATION OF ALL TREES AND SHRUBS SHALL BE COMPLETED PRIOR TO PLANTING FOR APPROVAL BY THE OWNER OR LANDSCAPE ARCHITECT.

8. FINAL GRADES SHALL BLEND SMOOTHLY WITH EXISTING GRADES, AND TOP AND BOTTOM OF SLOPES SHALL BE ROUNDED.

9. ALL TREE AND SHRUB MASSINGS SHALL BE MULCHED TO A DEPTH OF 3". ANNUAL AND PERENNIAL BEDS SHALL BE MULCHED TO A DEPTH OF 2". MULCH SHALL BE UNCOLORED TRIPLE-SHREDDED HARDWOOD BARK MULCH, AGED AT LEAST 6 MONTHS.

10. IF TREE STAKING IS PROPOSED, TREE STAKING MUST BE COMPLETED THE SAME DAY AS THE TREE IS INSTALLED. ALL TREES SHALL BE STAKED OR GUYED PER DETAIL.

11. LANDSCAPE PLANTING AREAS MUST BE FREE DRAINING. PAVEMENT, COMPACTED SUBGRADE, DEAD OR DYING PLANT MATERIAL, BLASTED ROCK, STONES GREATER THAN 1" IN DIAMETER, AND ANY OTHER MATERIAL HARMFUL TO PLANT GROWTH AND DEVELOPMENT SHALL BE REMOVED FROM AREAS TO BE LANDSCAPED AS REQUIRED BY PLANTING DETAILS OR SPECIFICATIONS.

12. PLANTING SOIL:

DEPTH: PLANTING SOIL SHALL BE INSTALLED AT A MINIMUM DEPTH OF 4" OR AS NOTED IN THE LANDSCAPE DETAILS. PLANTING SOIL SHALL BE UTILIZED IN ALL PLANTING AREAS INCLUDING SEEDED AREAS.

TESTING: CONTRACTOR SHALL SUBMIT (2) SOIL SAMPLES PER SOIL STOCKPILE TO A CERTIFIED TESTING LABORATORY TO DETERMINE ACIDITY, ORGANIC CONTENT, MECHANICAL ANALYSIS, AVAILABLE NUTRIENTS (N,P,K,Ca,Mg,S,Fe,Mn,Zn,Cu,B,Al,Pb) AND NECESSARY AMENDMENTS TO SOIL. THE CONTRACTOR SHALL SUBMIT THE TEST RESULTS TO THE OWNER OR LANDSCAPE ARCHITECT FOR REVIEW AND APPROVAL. TEST RESULTS SHALL RECOMMEND AMENDMENTS THAT WILL ALTER THE SOIL CHARACTERISTICS SUCH THAT THE CHARACTERISTICS DESCRIBED BELOW ARE ACHIEVED AND THE SPECIFIED PLANTS (CONTRACTOR TO PROVIDE LIST TO TESTING LABORATORY) WILL ACHIEVE PROPER GROWTH THAT IS NEITHER DEFICIENT NOR EXCESSIVE. THE CONTRACTOR SHALL INCORPORATE THESE AMENDMENTS AT NO INCREASE IN CONTRACT PRICE.

CHARACTERISTICS: PLANTING SOIL MAY CONSIST OF EXISTING ON-SITE SOILS, AMENDED ON-SITE SOILS, OR IMPORTED SOILS MEETING THE FOLLOWING CRITERIA:

A. NOT TO CONTAIN MATERIALS HARMFUL TO PLANT LIFE, TO BE CLEAN, FERTILE, FRIABLE, AND WELL DRAINING. ALL PLANTING SOIL SHALL BE FREE OF ANY SUBSOIL EARTH CLODS, SODS, STONES OVER 1" IN ANY DIMENSION, STICKS, ROOTS, WEEDS, LITTER AND OTHER DELETERIOUS MATERIAL. PLANTING SOIL SHALL BE UNIFORM IN QUALITY AND TEXTURE.
B. PLANTING SOIL SHALL HAVE THE FOLLOWING OPTIMUM RANGES UNLESS OTHERWISE APPROVED BY THE OWNER OR LANDSCAPE ARCHITECT.

ORGANIC CONTENT 3% – 6% FOR LAWN OR GRASS AREAS.
4% – 8% FOR TREE AND SHRUB PLANTERS.
8%-16% FOR RETENTION OR DETENTION BASINS.
(BY LOSS OF IGNITION AT 375 C METHOD OF TESTING)

PH 6.0 – 7.3

C. NUTRIENT LEVELS SHALL BE ACHIEVED BY THE CONTRACTOR'S ADDITION OF AMENDMENTS TO THE PLANTING SOIL TO MEET THE OPTIMUM NUTRIENT LEVELS SPECIFIED IN THE TESTING LABORATORY REPORT FOR EACH OF PLANTS TO BE INSTALLED.
D. SOIL SHALL BE COMPACTED TO A SURFACE PENETRATION RESISTANCE OF 75-125 LBS/SQ.IN.
E. SOIL MAY BE TREATED FOR WEEDS WITH PRE-EMERGENT OR POST-EMERGENT HERBICIDE, AS NEEDED AND AS APPROPRIATE FOR THE APPLICATION SEASON OR LOCATION, OR ELIMINATE GROWTH OF UNWANTED PLANT MATERIAL. APPLY HERBICIDES IN ACCORDANCE WITH MANUFACTURERS RECOMMENDATIONS. HERBICIDE APPLICATOR MUST BE LICENSED IN THE STATE OF CONNECTICUT, AND PERFORM APPLICATIONS IN ACCORDANCE WITH LOCAL REQUIREMENTS, PERMITTING STIPULATIONS, AND ANY OTHER RESTRICTIONS INCLUDING AND IN EXCESS OF STATE AND FEDERAL REGULATIONS.
F. PROPOSED TOPSOIL SHALL MEET THE USDA SOILS TEXTURAL PERCENTAGES OF SAND, SILT, AND CLAY FOR FOLLOWING CLASSIFICATIONS:
- LOAM
- SANDY LOAM WHERE SAND DOES NOT EXCEED 70% AND CLAY IS NOT LESS THAN 5%.
- SANDY CLAY LOAM WHERE SAND DOES NOT EXCEED 70% AND CLAY IS LESS THAN 28%.

G. BIORETENTION SOILS: SOIL TO BE INSTALLED IN RETENTION BASINS, PONDS, OR OTHER STORMWATER MANAGEMENT ENVIRONS SHALL MEET THE ABOVE DESCRIBED CHARACTERISTICS AND AS FOLLOWS:
- SOIL SHALL NOT CONTAIN MORE THAN 20% CLAY AND LESS THAN 40% SILT.
- SOIL SHALL HAVE AN INFILTRATION RATE BETWEEN 1/2" AND 3" PER HOUR.

H. MODIFICATION TO THE PLANTING SOIL CHARACTERISTICS DESCRIBED ABOVE MAY BE SUBMITTED FOR APPROVAL BY THE LANDSCAPE ARCHITECT. CONTRACTOR MUST DEMONSTRATE PROPOSED CHARACTERISTICS ARE EQUAL TO OR SUPERIOR TO THE SPECIFIED CHARACTERISTICS WITH RESPECT TO SUPPORTING PLANT GROWTH, AND STORMWATER MANAGEMENT.

12. PLANTING AMENDMENTS:
APPLY FERTILIZER AND OTHER AMENDMENTS AS RECOMMENDED FOR EACH PLANTING AREA BY SOIL ANALYSIS. APPLY AMENDMENTS IN A MANNER CONSISTENT WITH MANUFACTURER'S RECOMMENDATIONS. ANY ORGANIC AMENDMENTS SHALL HAVE A pH BETWEEN 4.5 AND 5.5 UNLESS OTHERWISE RECOMMENDED.

13. PLANT REQUIREMENTS: ALL PLANTS SHALL CONFORM IN SIZE AND GRADE TO THE AMERICAN STANDARD FOR NURSERY STOCK, ANSI Z60.1 (LATEST EDITION). ALL PLANTS SHALL MEET THE ADDITIONAL REQUIREMENTS SET FORTH BELOW AND IN WRITTEN SPECIFICATIONS AS APPLICABLE. ALL TREES AND SHRUBS SHALL HAVE BEEN GROWN AT A COMMERCIAL NURSERY WITHIN 200 MILES OF THE PROJECT SITE UNLESS OTHERWISE APPROVED BY OWNER OR LANDSCAPE ARCHITECT. THEY SHALL BE TYPICAL OF THEIR SPECIES OR VARIETY. THEY SHALL BE HEALTHY, SYMMETRICAL, EVENLY AND DENSELY BRANCHED, AND DENSELY FOLIATED WHEN IN LEAF. THEY SHALL BE FREE OF BARK INJURY, DISEASE, AND INSECT PESTS. ALL TREES SHALL HAVE A STRAIGHT TRUNK WITH A SINGLE MAIN LEADER UNLESS OTHERWISE CHARACTERISTIC OF THE SPECIES OR VARIETY. THE OWNER OR LANDSCAPE ARCHITECT WILL ALLOW SUBSTITUTIONS ONLY UPON WRITTEN APPROVAL. SIZES SHALL CONFORM TO THE MEASUREMENT SPECIFIED ON THE DRAWINGS. PLANTS LARGER THAN SPECIFIED MAY BE USED IF APPROVED, BUT THE USE OF SUCH PLANTS SHALL NOT INCREASE THE CONTRACT PRICE. ALL OVERSTORY TREES PLANTED ALONG PARKING AREAS, SIDEWALKS AND PEDESTRIAN ACCESSES SHALL NOT BRANCH BELOW 7' FEET IF THE TREE CALIPER IS 3" INCHES OR GREATER. ALL PLANT MATERIALS ARE SUBJECT TO INSPECTION AND ACCEPTANCE BY THE OWNER OR LANDSCAPE ARCHITECT AT THE NURSERY SOURCE. THE CONTRACTOR SHALL COORDINATE SOURCE VISITS WITH THE LANDSCAPE ARCHITECT AND SHALL ACCOMPANY THE OWNER AND/OR LANDSCAPE ARCHITECT FOR ALL INSPECTIONS. CERTIFICATES OF COMPLIANCE WITH SPECIFICATIONS ARE REQUIRED FOR ALL PLANTS.

14. INSPECTION AND REVIEW:
ALL PLANT MATERIAL SHALL BE SUBJECT TO INSPECTION AND ACCEPTANCE BY THE OWNER OR LANDSCAPE ARCHITECT AT THE NURSERY SOURCE OR PLACE OF GROWTH. THE CONTRACTOR SHALL COORDINATE WITH THE LANDSCAPE ARCHITECT ON A SCHEDULE FOR SOURCE VISITS AND ACCOMPANY THE OWNER OR LANDSCAPE ARCHITECT FOR ALL SOURCE INSPECTIONS. CERTIFICATES OF COMPLIANCE ARE REQUIRED FOR ALL PLANT MATERIALS.
PHOTOGRAPHIC REVIEW OF PLANT MATERIAL IS ACCEPTABLE IF APPROVED BY LANDSCAPE ARCHITECT. PHOTOGRAPHS MUST BE PROVIDED IN QUANTITY AND VARIETY TO ALLOW LANDSCAPE ARCHITECT SUFFICIENT INFORMATION TO MAKE A REASONABLE DETERMINATION AS TO THE PLANTS' QUALITY. OWNER AND LANDSCAPE ARCHITECT RESERVES THE RIGHT TO REJECT PLANT MATERIAL DELIVERED TO THE SITE BUT PREVIOUSLY ACCEPTED IF DAMAGED OR NOT PROPERLY MAINTAINED DURING THE DELIVERY PROCESS.

15. PLANTING SEASONS (UNLESS OTHERWISE APPROVED BY THE OWNER OR LANDSCAPE ARCHITECT)

	SPRING	FALL
DECIDUOUS TREES AND SHRUBS	APRIL 1 TO JUNE 15	SEPTEMBER 15 TO NOVEMBER 15

16. SEEDING MIXTURES: REFER TO SEED MIX NOTES.

17. ALL SLOPES STEEPER THAN 3:1 RECEIVING A SEED MIX SHALL BE COVERED WITH AN EROSION CONTROL BLANKET OF STRAW FIBER AND BIODEGRADABLE OR PHOTODEGRADABLE NETTING.

18. UNLESS OTHERWISE NOTED IN DRAWING SET, NEW TREELINES SHALL EQUAL CLEARING AND GRUBBING LIMIT FOR CONSTRUCTION.

19. ALL DISTURBED AREAS NOT OTHERWISE DEVELOPED SHALL BE SEEDED WITH THE LAWN SEED MIX.

SEED MIX NOTES

LANDSCAPE ARCHITECT TO CONSULT SEED MANUFACTURERS IN REGION APPROPRIATE TO THE SITE FOR SPECIFIC SEED MIXES. AVAILABLE SEED MIXES CHANGE ANNUALLY AND AS SUCH MUST BE ROUTINELY UPDATED.

A. LAWN SEEDING MIX:
15 % PERENNIAL RYEGRASS (BLEND OF 3 IMPROVED HYBRIDS)
25 % FINE LEAF OR CREEPING FESCUE (BLEND OF 3 IMPROVED HYBRIDS)
60 % KENTUCKY BLUEGRASS (BLEND OF 3 IMPROVED HYBRIDS)
SEEDING RATE: 5 LBS/1,000 S.F.
SEEDING DATES: AUGUST 15 – OCTOBER 1 AND APRIL 15 – JUNE 30 UNLESS OTHERWISE APPROVED BY THE OWNER OR LANDSCAPE ARCHITECT.

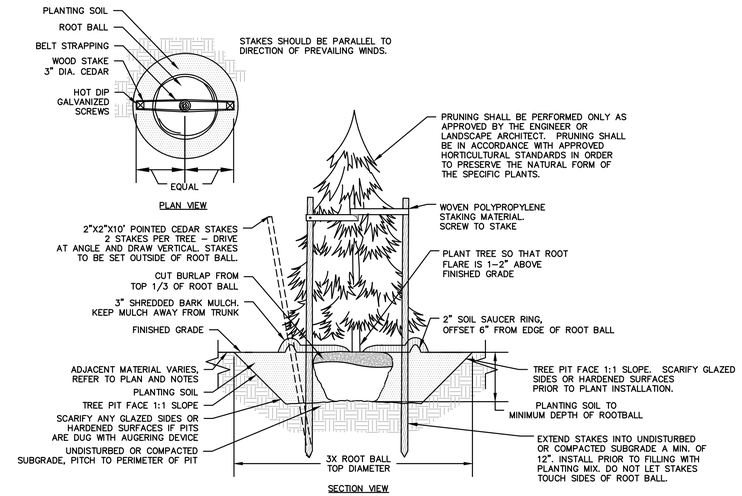

NOTES:
1. STAKING FOR TREES ON 4:1 SLOPES OR LESS TO BE PERFORMED AT CONTRACTOR'S DISCRETION.
2. WOVEN POLYPROPYLENE STAKING MATERIAL SHALL BE DEEPROOT ARBORTIE (GREEN) OR APPROVED EQUIVALENT. MATERIAL SHALL BE LOOPED AROUND TREE THROUGH EACH OTHER, TWISTED, AND SECURED TO THE STAKE. INSTALL SPECIFIED MATERIAL IN ACCORDANCE WITH MANUFACTURER'S DIRECTIONS.
3. BEFORE IN HOLE, REMOVE BOTTOM OF CAGE. ONCE IN HOLE, REMOVE REST OF CAGE FROM ROOT BALL. REMOVE TWINE AND BURLAP FROM TOP 1/3 OF ROOT BALL – SCORE REMAINING 2/3 OF BURLAP. IF BURLAP IS SYNTHETIC OR HAS BEEN TREATED WITH ANTI-DESSICANT, COMPLETELY REMOVE IT FROM ROOT BALL.

EVERGREEN TREE PLANTING

N.T.S

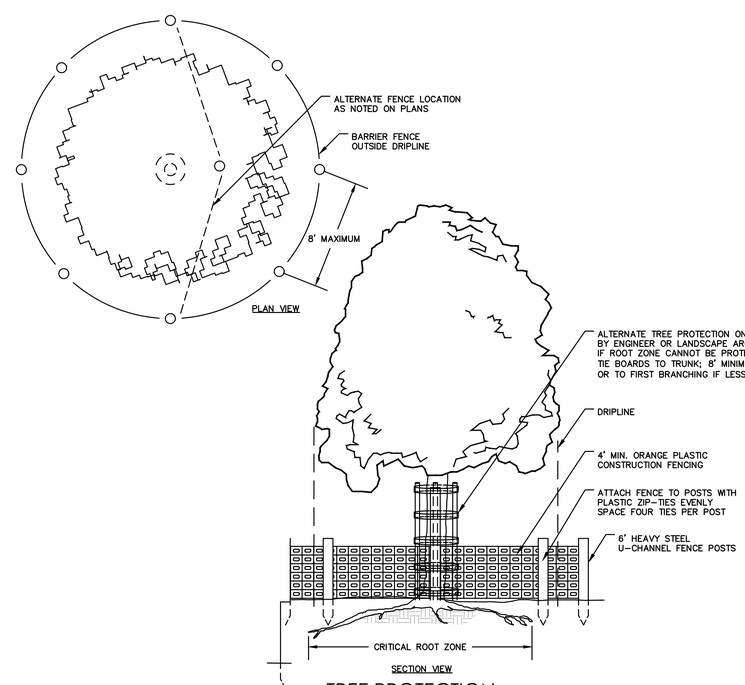

TREE PROTECTION

N.T.S

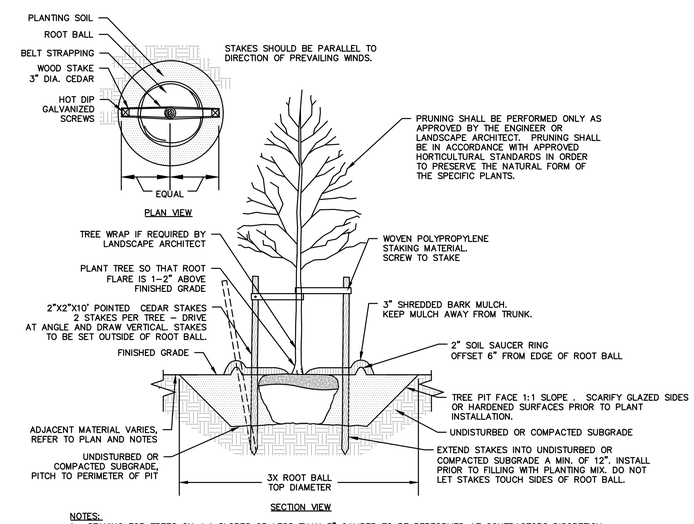

NOTES:
1. STAKING FOR TREES ON 4:1 SLOPES OR LESS THAN 3" CALIPER TO BE PERFORMED AT CONTRACTORS DISCRETION.
2. WOVEN POLYPROPYLENE STAKING MATERIAL SHALL BE DEEPROOT ARBORTIE (GREEN) OR APPROVED EQUIVALENT. MATERIAL SHALL BE LOOPED AROUND TREE THROUGH EACH OTHER, TWISTED, AND SECURED TO THE STAKE. INSTALL SPECIFIED MATERIAL IN ACCORDANCE WITH MANUFACTURER'S DIRECTIONS.
3. BEFORE IN HOLE, REMOVE BOTTOM OF CAGE. ONCE IN HOLE, REMOVE REST OF CAGE FROM ROOT BALL. REMOVE TWINE AND BURLAP FROM TOP 1/3 OF ROOT BALL – SCORE REMAINING 2/3 OF BURLAP. IF BURLAP IS SYNTHETIC OR HAS BEEN TREATED WITH ANTI-DESSICANT, COMPLETELY REMOVE IT FROM ROOT BALL.

DECIDUOUS TREE PLANTING

N.T.S

FOR PERMITTING PURPOSES ONLY
NOT RELEASED FOR CONSTRUCTION

Architecture
Engineering
Environmental
Land Surveying
BL Companies
355 Research Parkway
Meriden, CT 06450
(203) 630-1406
(203) 630-2615 Fax

STATE OF CONNECTICUT
MATTHEW J. BUDNY
No. 25591
LICENSED PROFESSIONAL ENGINEER

PROPOSED WAREHOUSE
240 ELLINGTON ROAD
SOUTH WINDSOR, HARTFORD COUNTY, CONNECTICUT

REVISIONS

No.	Date	Desc.

Designed	W.E.V.
Drawn	W.E.V.
Reviewed	
Scale	NONE
Project No.	2001166
Date	11/20/2020
CAD File: LL200116601	

Title

LANDSCAPE NOTES AND DETAILS

Sheet No.

LL-3

Xref (s) : BI2200116601 ; XI220011660 1 ; XC200116601 ; XC200116602 ; XL200116601

11/20/2020, IRWALLE\ C:\DRSDEV\ V5-2021\ BI\ PROJ\ LL2001166\01\ DWG\ LL-3.DWG,

© 2020 BL COMPANIES, INC. THESE DRAWINGS SHALL NOT BE UTILIZED BY ANY PERSON, FIRM OR CORPORATION WITHOUT THE SPECIFIC WRITTEN PERMISSION OF BL COMPANIES.

SITE ELECTRICAL GENERAL NOTES:

(NOT ALL NOTES APPLY TO THIS DRAWING)

1. ALL WORK SHALL BE DONE IN STRICT ACCORDANCE WITH ALL REQUIREMENTS OF ANY LOCAL APPLICABLE CODES OR ORDINANCES, PUBLIC UTILITY COMPANY REGULATIONS, STATE CODE, AND NATIONAL ELECTRICAL CODE WITH INTERIM AMENDMENTS THERETO.

2. ALL MATERIALS SHALL CONFORM TO THE LATEST ISSUE OF ALL APPLICABLE STANDARDS AS ESTABLISHED BY EEI, NEMA, ASTM, IPCEA, NATIONAL BOARD OF FIRE UNDERWRITERS & UNDERWRITERS LABORATORIES INC.

3. CONTRACTOR SHALL LEAVE ENTIRE ELECTRICAL SYSTEM INSTALLED BY THE CONTRACTOR IN PROPER WORKING CONDITION AND REPLACE WITHOUT ADDITIONAL CHARGE ALL WORK OR MATERIALS WHICH MAY DEVELOP DEFECTS WITHIN A PERIOD OF ONE (1) YEAR FROM DATE OF FINAL ACCEPTANCE BY THE ENGINEER.

4. ALL EQUIPMENT SHALL BE GROUNDED AND BONDED IN ACCORDANCE TO NEC.

5. REFER TO DWG E0.01 FOR GENERAL NOTES, ABBREVIATIONS AND SYMBOL LEGEND.

6. REFER TO WAREHOUSE SPACE POWER PLANS FOR PANEL LOCATIONS AND ADDITIONAL INFORMATION.

7. REFER TO ONE LINE DIAGRAMS DWG. E5.01 FOR ADDITIONAL INFORMATION.

8. MAXIMUM DISTANCE BETWEEN TRANSFORMER VAULT AND/OR PRIMARY ENCLOSURE SHALL BE 500-FEET. FIELD COORDINATE EXACT LOCATION.

9. ALL SITE ELECTRICAL EQUIPMENT LOCATIONS SHALL BE COORDINATED WITH THE CIVIL DRAWINGS. LOCATIONS SHOWN HERE ARE FOR REFERENCE ONLY.

10. FURNISH AND INSTALL PROTECTIVE BOLLARDS AS REQUIRED. COORDINATED WITH THE CIVIL DRAWINGS.

11. FOR ADDITIONAL BUILDING MOUNTED EMERGENCY EGRESS LIGHTING, ENTRY CANOPY LIGHTING, VAN LOAD OUT CANOPY AND ASSOCIATED WIRING INFORMATION REFER TO LIGHTING FLOOR PLANS.

12. FOR EXACT SITE LIGHTING LUMINAIRE LOCATIONS AND LUMINAIRE SCHEDULES REFER TO DRAWING ES1.01 SITE PHOTOMETRIC PLAN.

SITE ELECTRICAL KEY NOTES:

(NOT ALL KEY NOTES APPLY TO THIS DRAWING)

1. NEW UTILITY PAD-MOUNTED TRANSFORMER (BY UTILITY COMPANY), TRANSFORMER PAD (BY ELECTRICAL CONTRACTOR). FURNISH AND INSTALL TRANSFORMER PAD AND PROTECTIVE BOLLARDS PER LOCAL UTILITY COMPANY REQUIREMENTS. COORDINATE EXACT TRANSFORMER LOCATION WITH CIVIL ENGINEER. REFER TO ONE-LINE POWER RISER DIAGRAM FOR ADDITIONAL INFORMATION.
2. ROLL-UP GENERATOR QUICK CONNECT DOCKING STATION. COORDINATE FINAL LOCATION WITH TENANTS REPRESENTATIVE PRIOR TO ROUGH-IN. REFER TO ONE-LINE POWER RISER DIAGRAM FOR ADDITIONAL INFORMATION.
3. NEW UNDERGROUND UTILITY COMPANY PRIMARY SERVICE CONDUITS. COORDINATE PRIMARY CONDUITS INSTALLATION WITH CIVIL ENGINEER. COORDINATE EXACT PRIMARY SERVICE CONDUIT ROUTING WITH CIVIL ENGINEER.
4. NEW SECONDARY SERVICE CONDUITS. COORDINATE INSTALLATION OF SECONDARY CONDUITS WITH THE UTILITY COMPANY. REFER TO ONE-LINE POWER RISER DIAGRAM FOR ADDITIONAL INFORMATION.
5. NEW ROLL-UP GENERATOR CONDUITS. REFER TO ONE-LINE POWER RISER DIAGRAM FOR ADDITIONAL INFORMATION.
6. (4) 4" SCHEDULE 80 PVC CONDUITS FROM LOCAL TEL/COM PROVIDER SERVICE. COORDINATE EXACT CONDUIT ROUTING AND ADDITIONAL REQUIREMENTS WITH LOCAL TEL/COM PROVIDER AND CIVIL ENGINEER. REFER TO DRAWING E1.02 UTILITY ROOM POWER PART PLAN FOR TEL/COM CONDUIT TERMINATIONS LOCATION AND ADDITIONAL REQUIREMENTS.
7. COORDINATE PRIMARY ELECTRICAL SERVICE CONNECTION, FINAL LOCATION POINT AND ADDITIONAL REQUIREMENTS WITH LOCAL UTILITY COMPANY. COORDINATE TEL/COM SERVICE CONNECTION, FINAL LOCATION POINT AND ADDITIONAL REQUIREMENTS WITH LOCAL TEL/COM SERVICE PROVIDER. COORDINATE FINAL CONDUIT ROUTING WITH CIVIL ENGINEER.
8. COORDINATE EXACT EXTERIOR PYLON SIGN POWER CONNECTION REQUIREMENTS WITH SIGN MANUFACTURER AND INSTALLER. COORDINATE FINAL SIGN LOCATION WITH PROJECT CONSTRUCTION MANAGER.
9. COORDINATE FINAL BUILDING SIGN LOCATION WITH ARCHITECTURAL ELEVATIONS.

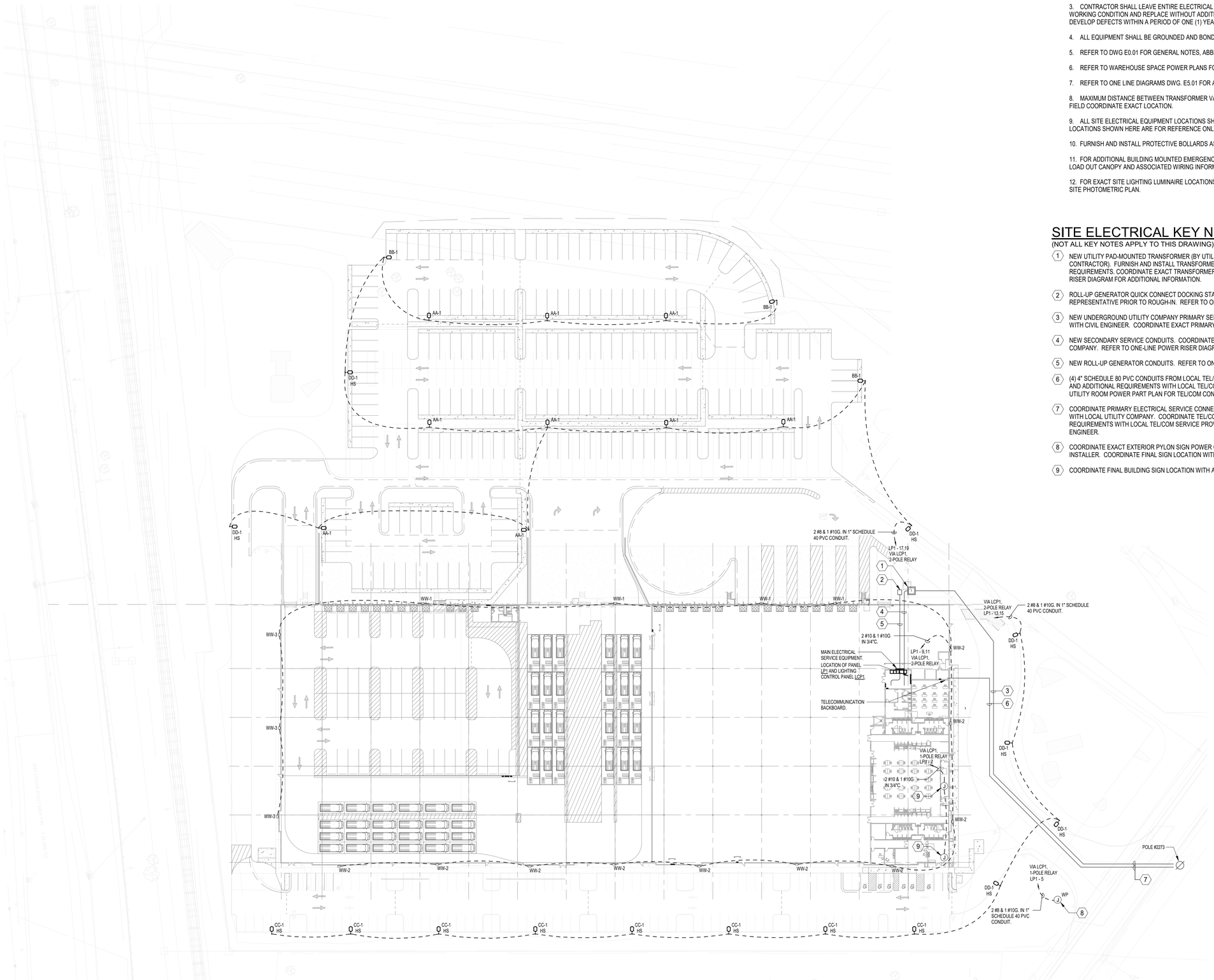

1 ELECTRICAL SITE PLAN
1" = 40'-0"

GEOGRAPHICAL NORTH

Architecture
Engineering
Environmental
Land Surveying
BL Companies

355 Research Parkway
Meriden, CT 06450
(203) 630-1406
(203) 630-2615 Fax

PROGRESS SET
11/17/2020 12:25:17 PM

PROPOSED DEVELOPMENT
240 ELLINGTON ROAD
SOUTH WINDSOR, CT 06074

NO	DATE	REVISIONS DESCRIPTION

Designed:	RZ
Drawn:	RZ
Reviewed:	MWB
Scale:	NOT TO SCALE
Project No.	2001166
Date:	11/20/2020

Title:
ELECTRICAL SITE PLAN

Sheet No.
ES1.02

11/17/2020 1:25:21 PM C:\Users\JPrete\Documents\2001166-MEP-R18-Central_jprete.rvt

© 2019 BL COMPANIES, INC. THESE DRAWINGS SHALL NOT BE UTILIZED BY ANY PERSON, FIRM OR CORPORATION WITHOUT THE SPECIFIC WRITTEN PERMISSION OF BL COMPANIES.

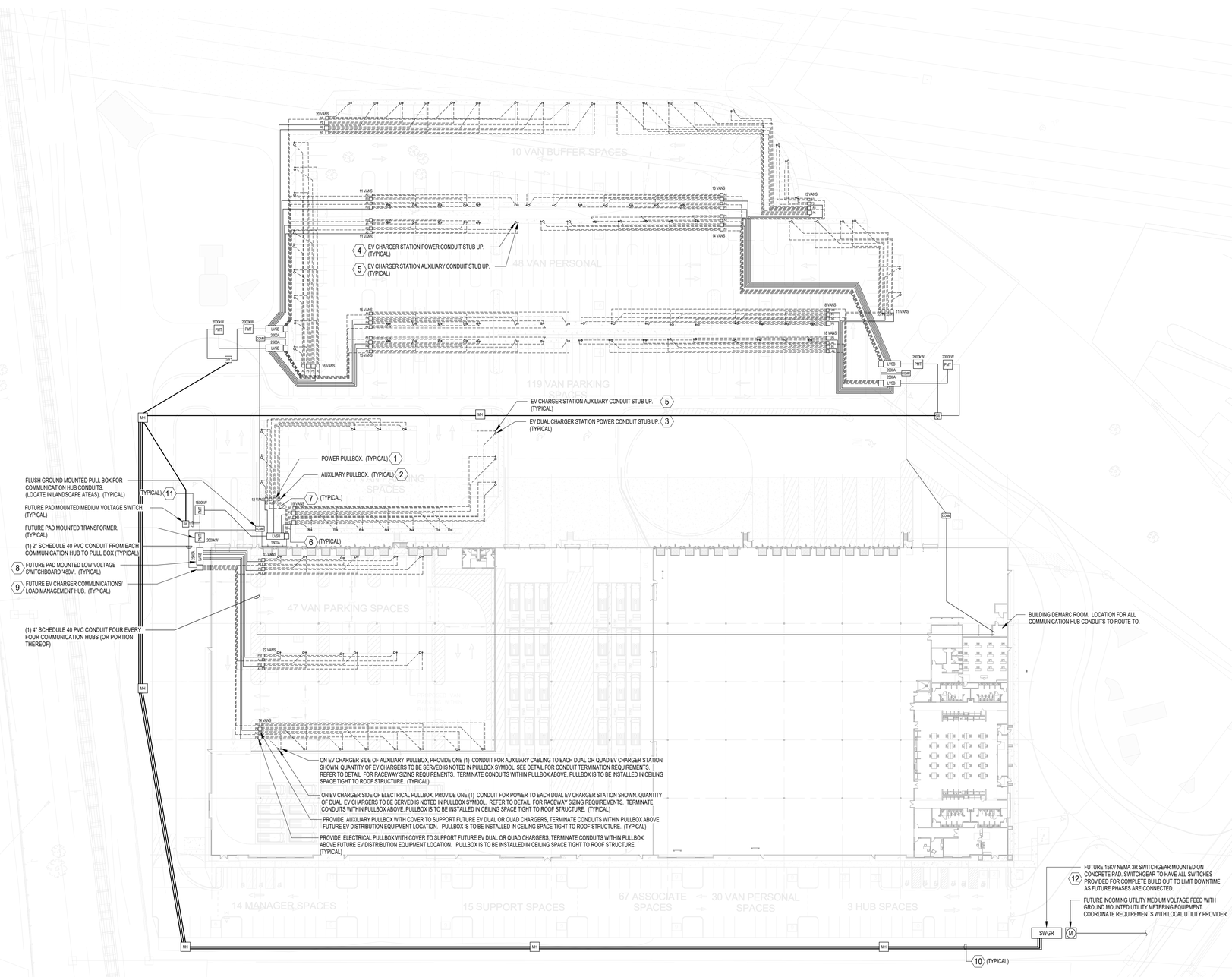

1 ELECTRICAL EV SITE PLAN New Civil
1" = 40'-0"

SITE ELECTRICAL GENERAL NOTES:

1. ALL WORK SHALL BE DONE IN STRICT ACCORDANCE WITH ALL REQUIREMENTS OF ANY LOCAL APPLICABLE CODES OR ORDINANCES, PUBLIC UTILITY COMPANY REGULATIONS, STATE CODE, AND NATIONAL ELECTRICAL CODE WITH INTERIM AMENDMENTS THERETO.

2. ALL MATERIALS SHALL CONFORM TO THE LATEST ISSUE OF ALL APPLICABLE STANDARDS AS ESTABLISHED BY EEI, NEMA, ASTM, IPCEA, NATIONAL BOARD OF FIRE UNDERWRITERS & UNDERWRITERS LABORATORIES INC.

3. CONTRACTOR SHALL LEAVE ENTIRE ELECTRICAL SYSTEM INSTALLED BY THE CONTRACTOR IN PROPER WORKING CONDITION AND REPLACE WITHOUT ADDITIONAL CHARGE ALL WORK OR MATERIALS WHICH MAY DEVELOP DEFECTS WITHIN A PERIOD OF ONE (1) YEAR FROM DATE OF FINAL ACCEPTANCE BY THE ENGINEER.

4. ALL EQUIPMENT SHALL BE GROUNDED AND BONDED IN ACCORDANCE TO NEC.

5. REFER TO DWG E0.01 FOR GENERAL NOTES, ABBREVIATIONS AND SYMBOL LEGEND.

6. REFER TO WAREHOUSE SPACE POWER PLANS FOR PANEL LOCATIONS AND ADDITIONAL INFORMATION.

7. REFER TO ONE LINE DIAGRAM FOR ADDITIONAL INFORMATION.

8. MAXIMUM DISTANCE BETWEEN TRANSFORMER VAULT AND/OR PRIMARY ENCLOSURE SHALL BE 500-FEET. FIELD COORDINATE EXACT LOCATION.

9. ALL SITE ELECTRICAL EQUIPMENT LOCATIONS SHALL BE COORDINATED WITH THE CIVIL DRAWINGS. LOCATIONS SHOWN HERE ARE FOR REFERENCE ONLY.

10. FURNISH AND INSTALL PROTECTIVE BOLLARDS AS REQUIRED. COORDINATED WITH THE CIVIL DRAWINGS.

11. FOR ADDITIONAL BUILDING MOUNTED EMERGENCY EGRESS LIGHTING AND ASSOCIATED WIRING INFORMATION REFER TO LIGHTING FLOOR PLANS.

12. FOR EXACT SITE LIGHTING LUMINAIRE LOCATIONS AND LUMINAIRE SCHEDULES REFER TO DRAWING ES1.01 SITE PHOTOMETRIC PLAN.

13. DESIGN ASSUMES MINIMUM UTILITY SERVICE VOLTAGE OF 25KV, WITH 25MA LINE IS AVAILABLE TO THE SITE. DESIGN CAN BE DONE AT 15KV WITH MINOR MODIFICATIONS.

14. AT LEVEL 3 CHARGING (50KW PER VEHICLE), PROVIDE; (8) EIGHT CHARGING STATIONS PER PULL BOX, WITH (5) FIVE PULL BOXES PER TRANSFORMER, AND (2) TWO TRANSFORMERS PER SWITCH.

15. AT LEVEL 3 CHARGING FOR AMAZON HUB AND ASSOCIATES PARKING (25KW PER VEHICLE), PROVIDE; (16) SIXTEEN CHARGING STATIONS PER PULL BOX, WITH (5) FIVE PULL BOXES PER TRANSFORMER, AND (2) TWO TRANSFORMERS PER SWITCH.

16. ALL CONDUITS FOR FUTURE EV CHARGERS LOCATED WITHIN THE BUILDING SPACE SHALL BE INSTALLED IN CEILING SPACE BELOW ROOF STRUCTURE.

SITE ELECTRICAL KEY NOTES:

1. PROVIDE FLUSH GROUND MOUNTED ELECTRICAL PULLBOX WITH COVER TO SUPPORT FUTURE EV DUAL OR QUAD CHARGERS. PULLBOX IS TO BE INSTALLED AS PART OF UNDERGROUND RACEWAY SCOPE. PULLBOX SHALL BE SIZED PER DETAIL 1/EV0.00.

2. PROVIDE FLUSH GROUND MOUNTED AUXILIARY PULLBOX WITH COVER TO SUPPORT FUTURE EV CHARGERS. PULLBOX IS TO BE INSTALLED AS PART OF UNDERGROUND RACEWAY SCOPE. PULLBOX SHALL BE SIZED PER DETAIL.

3. ON EV CHARGER SIDE OF ELECTRICAL PULLBOX, PROVIDE ONE (1) CONDUIT FOR POWER TO EACH DUAL EV CHARGER STATION SHOWN. QUANTITY OF DUAL EV CHARGERS TO BE SERVED IS NOTED IN PULLBOX SYMBOL. SEE DETAIL FOR CONDUIT TERMINATION REQUIREMENTS. REFER TO DETAIL 3/EV0.00 FOR RACEWAY SIZING REQUIREMENTS.

4. ON EV CHARGER SIDE OF ELECTRICAL PULLBOX, PROVIDE ONE (1) CONDUIT FOR POWER TO EACH QUAD EV CHARGER STATION SHOWN. QUANTITY OF QUAD EV CHARGERS TO BE SERVED IS NOTED IN PULLBOX SYMBOL. SEE DETAIL FOR CONDUIT TERMINATION REQUIREMENTS. REFER TO DETAIL 3/EV0.00 FOR RACEWAY SIZING REQUIREMENTS.

5. ON EV CHARGER SIDE OF AUXILIARY PULLBOX, PROVIDE ONE (1) CONDUIT FOR AUXILIARY CABLING TO EACH DUAL OR QUAD EV CHARGER STATION SHOWN. QUANTITY OF EV CHARGERS TO BE SERVED IS NOTED IN PULLBOX SYMBOL. SEE DETAIL FOR CONDUIT TERMINATION REQUIREMENTS. REFER TO DETAIL 3/EV0.00 FOR RACEWAY SIZING REQUIREMENTS.

6. ON LOW VOLTAGE SWITCHBOARD SIDE OF ELECTRICAL PULLBOX, PROVIDE ONE 4" CONDUIT FOR EVERY TWO DUAL OR QUAD EV CHARGERS SERVED (OR PORTION THEREOF) FOR FUTURE BRANCH CIRCUIT WIRING BACK TO LOW VOLTAGE SWITCHBOARD. THE INTENT IS TO COMBINE UP TO TWO EV CHARGER BRANCH CIRCUIT CONDUCTORS INTO A SINGLE CONDUIT FROM THE PULLBOX TO THE SWITCHBOARD.

7. ON COMMUNICATION HUB/LOAD MANAGEMENT SERVICE SIDE OF AUXILIARY PULLBOX, PROVIDE ONE 2" CONDUIT FOR EVERY THREE DUAL OR QUAD EV CHARGERS SERVED (OR PORTION THEREOF). FOR FUTURE AUXILIARY CABLING BACK TO COMMUNICATIONS HUB LOCATED AT LOW VOLTAGE SWITCHBOARD. THE INTENT IS TO COMBINE UP TO THREE EV CHARGER AUXILIARY CABLES INTO A SINGLE CONDUIT FROM THE PULLBOX TO THE COMMUNICATIONS HUB.

8. FUTURE LOW VOLTAGE SWITCHBOARD LOCATION. LV SWITCHBOARD WILL BE FED FROM ADJACENT FUTURE PAD MOUNTED TRANSFORMER AND WILL CONTAIN A MAIN OVERCURRENT PROTECTIVE DEVICE AND ALL OF THE BRANCH CIRCUIT BREAKERS TO SERVE ALL OF THE EV CHARGERS FED FROM THIS LV SWITCHBOARD. LV SWITCHBOARD WILL ALSO HAVE A PORTABLE GENERATOR CONNECTION CABINET SUITABLE TO CONNECT THE ENTIRE SWITCHBOARD LOAD TO A PORTABLE GENERATOR. PROVIDE TRYSTAR CONNECTION CABINET OR EQUAL. EV CHARGER CONDUITS STUBBED TO THIS LOCATION (SEE KEYNOTE 6) SHALL BE GROUPED TOGETHER TO BE ABLE TO FIT INTO THE BOTTOM OF THE SWITCHBOARD CONDUIT WINDOW(S). REFER TO TABLE #3 FOR ESTIMATED AMPACITY RATINGS OF LVSS EQUIPMENT.

9. FUTURE COMMUNICATION SYSTEM HUB/LOAD MANAGEMENT LOCATION. PROVIDE ONE (1) 2" CONDUIT FROM FUTURE COMMUNICATION HUB LOCATION TO DEMARC ROOM IN BUILDING TO SUPPORT FUTURE COMMUNICATIONS CABLING. UP TO FOUR (4) COMMUNICATIONS HUB CONDUITS MAY BE COMBINED INTO ONE (1) 4" CONDUIT BACK TO THE DEMARC ROOM IN BUILDING. IT IS ANTICIPATED THAT THE FUTURE COMMUNICATIONS CABLING WILL BE FIBER OPTIC CABLING. CONDUIT SHALL BE SUITABLE FOR FIBER OPTIC CABLING (SWEEPING BENDS). PROVIDE 16" SQUARE BY 24" DEEP MINIMUM SIZE FLUSH GROUND MOUNTED PULLBOXES LOCATED IN LANDSCAPED AREAS (NON-TRAFFIC AREAS) SPACED NO GREATER THAN EVERY 300' TO SUPPORT PULLING OF FUTURE FIBER OPTIC CABLING. FIELD VERIFY LOCATIONS. PROVIDE TRAFFIC RATED PULLBOXES IF PULLBOXES ARE LOCATED IN TRAFFIC AREAS. INCREASE PULLBOX SIZES AS REQUIRED TO ACCOMMODATE INCREASED CONDUIT SIZES AND/OR QUANTITIES.

10. PROVIDE UNDERGROUND CONDUIT FOR FUTURE PRIMARY SERVICE TO PAD MOUNTED 15KV SWITCH LOCATIONS SHOWN (S+C 4-COMPARTMENT LOAD BREAK SWITCH PMH-10 OR EQUAL). REFER TO DETAIL 3/EV0.00 FOR REQUIREMENTS. CONDUITS SHALL RUN FROM PAD MOUNTED SWITCH LOCATIONS BACK TO MAIN 15KV SWITCHGEAR. CONDUITS STUBBED TO THE SWITCH LOCATION SHALL BE GROUPED TOGETHER TO BE ABLE TO FIT INTO THE BOTTOM OF THE SWITCHGEAR CONDUIT WINDOW(S). REFER TO DETAIL 3/EV0.00 FOR CONDUIT SIZING REQUIREMENTS.

11. PROVIDE UNDERGROUND CONDUIT FOR FUTURE PRIMARY SERVICE TO FUTURE PAD MOUNTED TRANSFORMER LOCATIONS SHOWN. PROVIDE ONE (1) 6" CONDUIT FOR EACH RUN SHOWN. CONDUIT SHALL RUN FROM PAD MOUNTED TRANSFORMER TO PAD MOUNTED SWITCH. CONDUIT SHALL BE LOCATED TO ALLOW FOR ENTRY INTO PAD MOUNTED TRANSFORMER CONDUIT WINDOW OPENING. REFER TO TABLE #3 FOR KVA RATING OF PAD MOUNTED TRANSFORMER.

12. PROVIDE 15KV SWITCHGEAR SIZED TO ACCOMMODATE ALL FUTURE EV CHARGER LOADS (FUTURE).

NOTE: EV CHARGING EQUIPMENT IS SHOWN FOR REFERENCE ONLY TO REPRESENT THE PROPOSED FUTURE END STATE CONDITION. THIS SCOPE DOES NOT INCLUDE THE EV CHARGING EQUIPMENT. ANTICIPATED EQUIPMENT SIZES ARE AS FOLLOWS:
AC CHARGER PEDESTAL - 26"W X 96"H X 26"L
DC CHARGER PEDESTAL - 26"W X 96"H X 26"L
MODULAR DC POWER CABINET - 48"W X 84"H X 48"L

NOTE: THIS SCOPE DOES NOT INCLUDE THE FUTURE EV CHARGING EQUIPMENT. SHOWN FOR REFERENCE ONLY.

FUTURE EV DISPENSING STATIONS MAY BE SINGLE, DUAL OR QUAD TYPE. IF EV DISPENSING STATION TYPES VARY FROM WHAT IS SHOWN IN THESE PLANS, SURFACE CONDUIT CAN BE UTILIZED TO CONNECT EV DISPENSING STATION(S) TO THE UNDERGROUND INFRASTRUCTURE RACEWAYS.

GEOGRAPHICAL NORTH

Architecture
Engineering
Environmental
Land Surveying
BL Companies
355 Research Parkway
Meriden, CT 06450
(203) 630-1406
(203) 630-2615 Fax

PROGRESS SET
11/17/2020 12:25:21 PM

PROPOSED DEVELOPMENT
240 ELLINGTON ROAD
SOUTH WINDSOR, CT 06074

NO	DATE	DESCRIPTION

REVISIONS

Designed	RZ
Drawn:	RZ
Reviewed:	MWB
Scale:	NOT TO SCALE
Project No.	2001166
Date:	11/20/2020

Title:
ELECTRICAL EV SITE PLAN

Sheet No.
ES1.03

11/17/2020 1:25:23 PM C:\Users\JPrete\Documents\2001166-MEP-R18-Central_jprete.rvt

© 2019 BL COMPANIES, INC. THESE DRAWINGS SHALL NOT BE UTILIZED BY ANY PERSON, FIRM OR CORPORATION WITHOUT THE SPECIFIC WRITTEN PERMISSION OF BL COMPANIES.

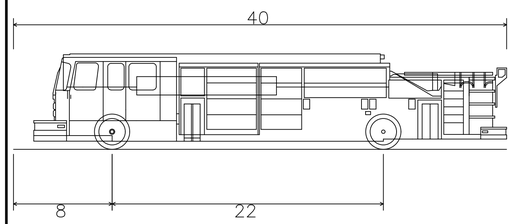

Pumper Fire Truck	
Overall Length	40.000ft
Overall Width	8.167ft
Overall Body Height	7.745ft
Min Body Ground Clearance	0.656ft
Track Width	8.167ft
Lock-to-lock time	5.00s
Max Wheel Angle	45.00°

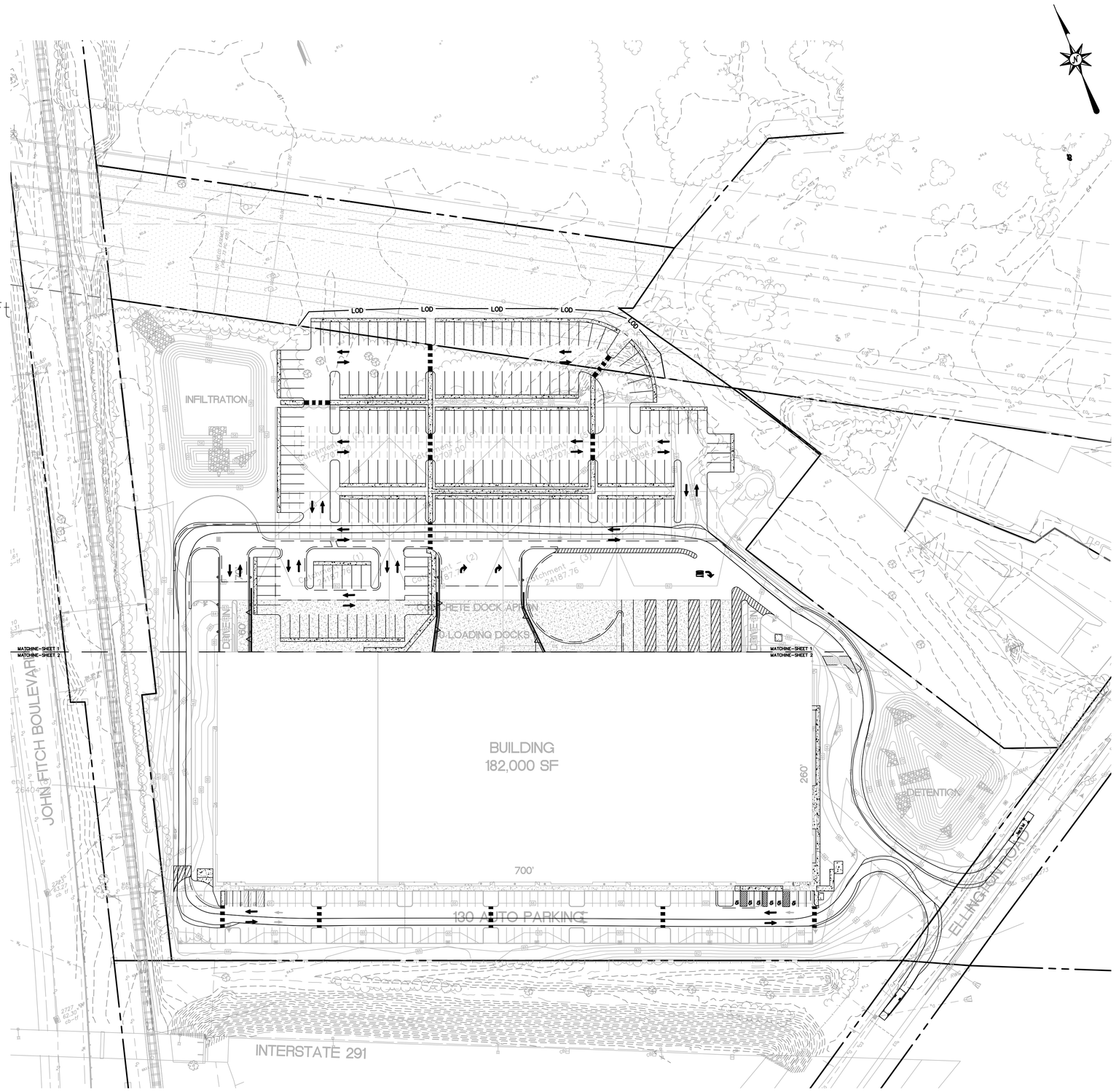

FOR PERMITTING PURPOSES ONLY
NOT RELEASED FOR CONSTRUCTION

GRAPHIC SCALE
60 30 0 60
SCALE IN FEET

Architecture
Engineering
Environmental
Land Surveying
BL Companies
355 Research Parkway
Meriden, CT 06450
(203) 630-1406
(203) 630-2615 Fax

STATE OF CONNECTICUT
MATTHEW J. BUDNY
No. 20288
LICENSED
PROFESSIONAL ENGINEER

PROPOSED WAREHOUSE
240 ELLINGTON ROAD
SOUTH WINDSOR, HARTFORD COUNTY, CONNECTICUT

REVISIONS

No.	Date	Desc.

Designed	A.J.S.
Drawn	S.E.L.
Reviewed	
Scale	1"=60'
Project No.	2001166
Date	11/20/2020
CAD File: TT200116601	

Title
TRUCK TURN PLAN

Sheet No.
TT-1

Xref (s) : BD200116601 ; XZ200116601 ; XC200116601

© 2020 BL COMPANIES, INC. THESE DRAWINGS SHALL NOT BE UTILIZED BY ANY PERSON, FIRM OR CORPORATION WITHOUT THE SPECIFIC WRITTEN PERMISSION OF BL COMPANIES.

SITE WORK GENERAL NOTES

1. THESE PLANS ARE FOR PERMITTING PURPOSES ONLY AND ARE NOT FOR CONSTRUCTION.
2. ALL CONSTRUCTION SHALL COMPLY WITH THE PROJECT SPECIFICATION MANUAL; CORPORATION STANDARDS, MUNICIPAL STANDARDS AND SPECIFICATIONS, COUNTY STANDARDS AND SPECIFICATIONS, CONNECTICUT DEPARTMENT OF TRANSPORTATION STANDARDS AND SPECIFICATIONS, 2010 ADA STANDARDS, AND STATE BUILDING CODE IN THE ABOVE REFERENCED INCREASING HIERARCHY. IF SPECIFICATIONS ARE IN CONFLICT, THE MORE STRINGENT SPECIFICATION SHALL APPLY. ALL CONSTRUCTION SHALL BE PERFORMED IN ACCORDANCE WITH ALL APPLICABLE OSHA, FEDERAL, STATE AND LOCAL REGULATIONS.
3. REFER TO OTHER PLANS BY OTHER DISCIPLINES, DETAILS AND PROJECT MANUAL FOR ADDITIONAL INFORMATION. THE CONTRACTOR SHALL VERIFY ALL SITE AND BUILDING CONDITIONS IN THE FIELD AND CONTACT THE CIVIL ENGINEER AND ARCHITECT IF THERE ARE ANY QUESTIONS OR CONFLICTS REGARDING THE CONSTRUCTION DOCUMENTS AND/OR FIELD CONDITIONS, SO THAT APPROPRIATE REVISIONS CAN BE MADE PRIOR TO BIDDING. ANY CONFLICT BETWEEN THE DRAWINGS AND SPECIFICATIONS SHALL BE CONFIRMED WITH THE OWNER'S CONSTRUCTION MANAGER PRIOR TO BIDDING.
4. DO NOT INTERRUPT EXISTING UTILITIES SERVICING FACILITIES OCCUPIED AND USED BY THE OWNER OR OTHERS DURING OCCUPIED HOURS EXCEPT WHEN SUCH INTERRUPTIONS HAVE BEEN AUTHORIZED IN WRITING BY THE OWNER AND THE LOCAL MUNICIPALITIES. INTERRUPTIONS SHALL ONLY OCCUR AFTER ACCEPTABLE TEMPORARY SERVICE HAS BEEN PROVIDED.
5. THE CONTRACTOR SHALL ABIDE BY ALL OSHA, FEDERAL, STATE, AND LOCAL REGULATIONS WHEN OPERATING CRANES, BOOMS, HOISTS, ETC. IN CLOSE PROXIMITY TO OVERHEAD ELECTRIC LINES. IF CONTRACTOR MUST OPERATE EQUIPMENT CLOSE TO ELECTRIC LINES, CONTACT POWER COMPANY TO MAKE ARRANGEMENTS FOR PROPER SAFEGUARDS. ANY UTILITY COMPANY FEES SHALL BE PAID FOR BY THE CONTRACTOR.
6. THE CONTRACTOR SHALL PROVIDE AS-BUILT RECORD DRAWINGS OF ALL CONSTRUCTION (INCLUDING UNDERGROUND UTILITIES AND STORMWATER SYSTEM) TO THE OWNER AT THE END OF CONSTRUCTION.
7. THE ARCHITECT OR ENGINEER IS NOT RESPONSIBLE FOR SITE SAFETY MEASURES TO BE EMPLOYED DURING CONSTRUCTION. THE ARCHITECT AND ENGINEER HAVE NO CONTRACTUAL DUTY TO CONTROL THE SAFEST METHODS OR MEANS OF THE WORK, JOB SITE RESPONSIBILITIES, SUPERVISION OR TO SUPERVISE SAFETY AND DOES NOT VOLUNTARILY ASSUME ANY SUCH DUTY OR RESPONSIBILITY.
8. THE CONTRACTOR SHALL COMPLY WITH CFR 29 PART 1926 FOR EXCAVATION, TRENCHING, AND TRENCH PROTECTION REQUIREMENTS.
9. INFORMATION ON EXISTING UTILITIES AND STORM DRAINAGE SYSTEMS HAS BEEN COMPILED FROM AVAILABLE INFORMATION INCLUDING UTILITY COMPANY AND MUNICIPAL OR COUNTY OR STATE RECORD MAPS AND/OR FIELD SURVEY AND IS NOT GUARANTEED CORRECT OR COMPLETE. UTILITIES AND STORM DRAINAGE SYSTEMS ARE SHOWN TO ALERT THE CONTRACTOR TO THEIR PRESENCE AND THE CONTRACTOR IS SOLELY RESPONSIBLE FOR DETERMINING ACTUAL LOCATIONS AND ELEVATIONS OF ALL UNDERGROUND AND OVERHEAD UTILITIES AND STORM DRAINAGE SYSTEMS INCLUDING SERVICES. PRIOR TO DEMOLITION OR CONSTRUCTION, THE CONTRACTOR SHALL CONTACT CT CALL BEFORE YOU DIG (CBYD) 72 HOURS BEFORE COMMENCEMENT OF WORK AT [CT (800) 922-4455] OR AT 811 AND VERIFY ALL UTILITY AND STORM DRAINAGE SYSTEM LOCATIONS. THE CONTRACTOR SHALL EMPLOY THE USE OF A UTILITY LOCATING COMPANY TO PROVIDE SUBSURFACE UTILITY ENGINEERING CONSISTING OF DESIGNATING UTILITIES AND STORM PIPING ON PRIVATE PROPERTY WITHIN THE CONTRACT LIMIT AND CONSISTING OF DESIGNATING AND LOCATING WHERE PROPOSED UTILITIES AND STORM PIPING CROSS EXISTING UTILITIES AND STORM PIPING WITHIN THE CONTRACT LIMITS.
10. DO NOT SCALE DRAWINGS. DIMENSIONS GOVERN OVER SCALED DIMENSIONS.
11. IF PLANS AND OR SPECIFICATIONS ARE IN CONFLICT, THE MOST COSTLY SHALL APPLY.
12. ALL CONTRACTORS AND SUBCONTRACTORS SHALL OBTAIN COMPLETE DRAWING PLAN SETS FOR BIDDING AND CONSTRUCTION. PLAN SETS OR PLAN SET ELECTRONIC POSTINGS SHALL NOT BE DISASSEMBLED INTO PARTIAL PLAN SETS FOR USE BY CONTRACTORS AND SUBCONTRACTORS OF INDIVIDUAL TRADES. IT SHALL BE THE CONTRACTOR'S AND SUBCONTRACTOR'S RESPONSIBILITY TO OBTAIN COMPLETE PLAN SETS OR COMPLETE PLAN SET ELECTRONIC POSTINGS FOR USE IN BIDDING AND CONSTRUCTION.
13. ALL NOTES AND DIMENSIONS DESIGNATED 'TYPICAL' APPLY TO ALL LIKE OR SIMILAR CONDITIONS THROUGHOUT THE PROJECT.
14. CONTRACTOR(S) TO TAKE AND VERIFY ALL DIMENSIONS AND CONDITIONS OF THE WORK AND BE RESPONSIBLE FOR COORDINATION OF SAME. FIELD VERIFY ALL EXISTING CONDITIONS PRIOR TO START OF WORK.
15. BL COMPANIES WILL PREPARE FINAL CONSTRUCTION DOCUMENTS SUITABLE FOR BIDDING AND CONSTRUCTION. PROGRESS SETS OF THESE DOCUMENTS ARE NOT SUITABLE FOR THOSE PURPOSES. IF CLIENT ELECTS TO SOLICIT BIDS OR ENTER INTO CONSTRUCTION CONTRACTS UTILIZING CONSTRUCTION DOCUMENTS THAT ARE NOT YET FINAL, CONSULTANT SHALL NOT BE RESPONSIBLE FOR ANY COSTS OR DELAY ARISING AS A RESULT.
16. NO CONSTRUCTION OR DEMOLITION SHALL BEGIN UNTIL APPROVAL OF THE FINAL PLANS IS GRANTED BY ALL GOVERNING AND REGULATORY AGENCIES.
17. THE OWNER IS RESPONSIBLE FOR OBTAINING ALL NECESSARY ZONING PERMITS REQUIRED BY GOVERNMENT AGENCIES PRIOR TO CONSTRUCTION. THE CONTRACTOR SHALL CONTACT AND OBTAIN FROM COUNTY SOURCES ALL CONSTRUCTION PERMITS, INCLUDING ANY STATE DOT PERMITS, SEWER AND WATER CONNECTION PERMITS, AND ROADWAY CONSTRUCTION PERMITS. THE CONTRACTOR SHALL POST ALL BONDS, PAY ALL FEES, PROVIDE PROOF OF INSURANCE AND PROVIDE TRAFFIC CONTROL NECESSARY FOR THIS WORK EXCEPT CTDOT ENCROACHMENT PERMIT BOND.
18. THE CONTRACTOR SHALL SUBMIT SHOP DRAWINGS OF ALL PRODUCTS AND MATERIALS PER PLANS AND SPECIFICATIONS TO THE OWNER AND CIVIL ENGINEER FOR REVIEW AND APPROVAL PRIOR TO FABRICATION OR DELIVERY TO THE SITE. ALLOW A MINIMUM OF 14 WORKING DAYS FOR REVIEW.
19. THE CONTRACTOR SHALL FOLLOW THE SEQUENCE OF CONSTRUCTION NOTES PROVIDED ON THE SEDIMENT AND EROSION CONTROL PLAN.
20. THE CONTRACTOR SHALL REFERENCE ARCHITECTURAL PLANS FOR EXACT DIMENSIONS AND CONSTRUCTION DETAILS OF BUILDING, AND THE RAISED CONCRETE SIDEWALKS, LANDINGS, RAMPS, AND STAIRS.
21. SHOULD ANY UNCHARTED OR INCORRECTLY CHARTED, EXISTING PIPING OR OTHER UTILITY BE UNCOVERED DURING EXCAVATION, CONSULT THE CIVIL ENGINEER IMMEDIATELY FOR DIRECTIONS BEFORE PROCEEDING FURTHER WITH WORK IN THIS AREA.
22. ALL SITE DIMENSIONS ARE REFERENCED TO THE FACE OF CURBS OR EDGE OF PAVING AS APPLICABLE UNLESS OTHERWISE NOTED. ALL BUILDING DIMENSIONS ARE REFERENCED TO THE OUTSIDE FACE OF THE STRUCTURE.
23. THE CONTRACTOR SHALL PROVIDE AND MAINTAIN TRAFFIC DEVICES FOR PROTECTION OF VEHICLES AND PEDESTRIANS CONSISTING OF DRUMS, BARRIERS, SIGNS, LIGHTS, FENCES, TEMPORARY WALKWAYS, TRAFFIC CONTROLLERS AND UNIFORMED TRAFFIC OFFICERS AS REQUIRED OR AS ORDERED BY THE ENGINEER OR AS REQUIRED BY THE LOCAL GOVERNING AUTHORITIES OR AS REQUIRED BY PERMIT STIPULATIONS OR AS REQUIRED BY THE OWNER. CONTRACTOR SHALL MAINTAIN ALL TRAFFIC LANES AND PEDESTRIAN WALKWAYS FOR USE AT ALL TIMES UNLESS WRITTEN APPROVAL FROM THE APPROPRIATE GOVERNING AGENCY IS GRANTED.
24. TRAFFIC CONTROL SIGNAGE SHALL CONFORM TO THE STATE DOT STANDARD DETAIL SHEETS AND THE MANUAL OF UNIFORM TRAFFIC CONTROL DEVICES. SIGNS SHALL BE INSTALLED PLUMB WITH THE EDGE OF THE SIGN 2' OFF THE FACE OF THE CURB, AND WITH 7' VERTICAL CLEARANCE UNLESS OTHERWISE DETAILED OR NOTED.
25. REFER TO DETAIL SHEETS FOR PAVEMENT, CURBING, AND SIDEWALK INFORMATION.
26. THE CONTRACT LIMIT IS THE PROPERTY LINE UNLESS OTHERWISE SPECIFIED OR SHOWN ON THE CONTRACT DRAWINGS.
27. THE CONTRACTOR SHALL SUBMIT A SHOP DRAWING OF THE PAVEMENT MARKING PAINT MIXTURE PRIOR TO STRIPING.
28. PAVEMENT MARKING KEY:

    4" SYDL 4' SOLID YELLOW DOUBLE LINE
    4" SYL 4" SOLID YELLOW LINE
    4" SWL 4" SOLID WHITE LINE
    12" SWSB 12" SOLID WHITE STOP BAR
    4" BWL 4" BROKEN WHITE LINE 10' STRIPE 30' SPACE

29. PARKING SPACES SHALL BE STRIPED WITH 4" SWL; HATCHED AREA SHALL BE STRIPED WITH 4" SWL AT A 45° ANGLE, 2' ON CENTER. HATCHING, SYMBOLS, AND STRIPING FOR HANDICAPPED SPACES SHALL BE PAINTED BLUE. OTHER MARKINGS SHALL BE PAINTED WHITE OR AS NOTED.
30. ALL PARKING SPACES AND HATCHED AREAS SHALL HAVE TWO COATS OF PAVEMENT MARKINGS APPLIED TO STRIPING.
31. PAVEMENT MARKINGS SHALL BE HOT APPLIED TYPE IN ACCORDANCE WITH STATE DOT SPECIFICATIONS, UNLESS WHERE EPOXY RESIN PAVEMENT MARKINGS ARE INDICATED.
32. THE CONTRACTOR SHALL RESTORE ANY UTILITY STRUCTURE, DRAINAGE STRUCTURE, PIPE, UTILITY, PAVEMENT, CURBS, SIDEWALKS, LANDSCAPED AREAS, SWALE, PAVEMENT MARKINGS, OR SIGNAGE DISTURBED DURING DEMOLITION AND/OR CONSTRUCTION TO THEIR ORIGINAL CONDITION OR BETTER, AS APPROVED BY THE CIVIL ENGINEER, AND TO THE SATISFACTION OF THE OWNER AND STATE.
33. EXISTING BOUNDARY AND TOPOGRAPHY IS BASED ON A COMPILATION OF BEST AVAILABLE MAPPING.
34. ALTERNATIVE METHODS AND PRODUCTS OTHER THAN THOSE SPECIFIED MAY BE USED IF REVIEWED AND APPROVED BY THE OWNER, CIVIL ENGINEER, AND APPROPRIATE REGULATORY AGENCY PRIOR TO INSTALLATION DURING THE BIDDING PROCESS.
35. CTDOT ENCROACHMENT PERMIT SHALL BE OBTAINED BY CONTRACTOR WHO SHALL PAY ALL FEES, PROVIDE PROOF OF INSURANCE AND PROVIDE TRAFFIC PROTECTION NECESSARY FOR THE WORK. THE OWNER SHALL POST CTDOT ENCROACHMENT PERMIT BOND.
36. AN EROSION CONTROL BOND IS REQUIRED TO BE POSTED BY THE CONTRACTOR BEFORE THE START OF ANY ACTIVITY ON OR OFF SITE. THE AMOUNT OF THE EROSION CONTROL BOND WILL BE DETERMINED BY THE AUTHORITY HAVING JURISDICTION.
37. A DEMOLITION PERMIT IS REQUIRED FOR EXISTING BUILDINGS.
38. THE SITE IS CURRENTLY SERVICED BY PUBLIC WATER.
39. NO PART OF THE PROJECT PARCEL IS LOCATED WITHIN ANY FEMA DESIGNATED FLOOD HAZARD AREAS.
40. THERE ARE NO WETLANDS LOCATED ON THE SITE AS INDICATED BY TOWN MAPPING.
41. 12" SWSB (STOP BAR) AND 4" SYDL AND SWL PAVEMENT MARKINGS LOCATED IN DRIVEWAYS AND IN STATE HIGHWAY SHALL BE EPOXY RESIN TYPE ACCORDING TO CONNDOT SPECIFICATIONS.
42. FIRE LANES SHALL BE ESTABLISHED AND PROPERLY DESIGNATED IN ACCORDANCE WITH THE REQUIREMENTS OF THE FIRE DISTRICT FIRE MARSHAL.
43. THE CONTRACTOR SHALL REMOVE CONFLICTING PAVEMENT MARKINGS IN THE ROADWAY BY METHOD APPROVED BY THE AUTHORITY HAVING JURISDICTION OR DOT AS APPLICABLE FOR THE LOCATION OF THE WORK.
44. ALL ADA DESIGNATED PARKING STALLS, ACCESS AISLES AND PEDESTRIAN WALKWAYS SHALL CONFORM TO THE CURRENT VERSION OF THE AMERICANS WITH DISABILITIES ACT STANDARDS FOR ACCESSIBLE DESIGN AND ANSI STANDARDS AND AS MAY BE SUPERCEDED BY THE STATE BUILDING CODE.
45. CONSTRUCTION OCCURRING ON THIS SITE SHALL COMPLY WITH NFPA 241 STANDARD FOR SAFEGUARDING CONSTRUCTION, ALTERATION AND DEMOLITION OPERATIONS, AND CHAPTER 16 OF NFPA 1 UNIFORM FIRE CODE.
46. ALL BUILDINGS, INCLUDING FOUNDATION WALLS AND FOOTINGS AND BASEMENT SLABS INDICATED ON THE DEMOLITION PLAN ARE TO BE REMOVED FROM THE SITE. CONTRACTOR SHALL SECURE ANY PERMITS, PAY ALL FEES AND PERFORM CLEARING AND GRUBBING AND DEBRIS REMOVAL PRIOR TO COMMENCEMENT OF GRADING OPERATIONS.
47. SEDIMENT AND EROSION CONTROLS AS SHOWN ON THE SEDIMENT AND EROSION CONTROL PLAN AND/OR DEMOLITION PLAN SHALL BE INSTALLED BY THE DEMOLITION CONTRACTOR PRIOR TO START OF DEMOLITION AND CLEARING AND GRUBBING OPERATIONS.
48. REMOVE AND DISPOSE OF ANY SIDEWALKS, FENCES, STAIRS, WALLS, DEBRIS AND RUBBISH REQUIRING REMOVAL FROM THE WORK AREA IN AN APPROVED OFF SITE LANDFILL, BY AN APPROVED HAULER. HAULER SHALL COMPLY WITH ALL REGULATORY REQUIREMENTS.
49. THE CONTRACTOR SHALL SECURE ALL PERMITS FOR HIS DEMOLITION AND DISPOSAL OF HIS DEMOLITION MATERIAL TO BE REMOVED FROM THE SITE. THE CONTRACTOR SHALL POST BONDS AND PAY PERMIT FEES AS REQUIRED. BUILDING DEMOLITION CONTRACTOR SHALL BE RESPONSIBLE FOR PERMITS AND DISPOSAL OF ALL BUILDING DEMOLITION DEBRIS IN AN APPROVED OFF-SITE LANDFILL.
50. ASBESTOS OR HAZARDOUS MATERIAL, IF FOUND ON SITE, SHALL BE REMOVED BY A LICENSED HAZARDOUS MATERIAL ABATEMENT CONTRACTOR.
51. THE CONTRACTOR SHALL PREPARE ALL MANIFEST DOCUMENTS AS REQUIRED PRIOR TO COMMENCEMENT OF DEMOLITION.
52. THE CONTRACTOR SHALL CUT AND PLUG, OR ARRANGE FOR THE APPROPRIATE UTILITY PROVIDER TO CUT AND PLUG ALL SERVICE PIPING AT THE STREET LINE OR AT THE MAIN, AS REQUIRED BY THE UTILITY PROVIDER, OR AS OTHERWISE NOTED OR SHOWN ON THE CONTRACT DRAWINGS. ALL SERVICES MAY NOT BE SHOWN ON THIS PLAN. THE CONTRACTOR SHALL INVESTIGATE THE SITE PRIOR TO BIDDING TO DETERMINE THE EXTENT OF SERVICE PIPING TO BE REMOVED, CUT OR PLUGGED. THE CONTRACTOR SHALL PAY ALL UTILITY PROVIDER FEES FOR ABANDONMENTS AND REMOVALS.
53. THE CONTRACTOR SHALL PROTECT ALL IRON PINS, MONUMENTS AND PROPERTY CORNERS DURING DEMOLITION AND CONSTRUCTION ACTIVITIES. ANY CONTRACTOR DISTURBED PINS, MONUMENTS, AND OR PROPERTY CORNERS, ETC. SHALL BE RESET BY A LICENSED LAND SURVEYOR AT THE EXPENSE OF THE CONTRACTOR.
54. THE DEMOLITION CONTRACTOR SHALL STABILIZE THE SITE AND KEEP EROSION CONTROL MEASURES IN PLACE UNTIL THE COMPLETION OF HIS WORK OR UNTIL THE COMMENCEMENT OF WORK BY THE SITE CONTRACTOR, WHICHEVER OCCURS FIRST, AS REQUIRED OR DEEMED NECESSARY BY THE ENGINEER OR OWNER'S REPRESENTATIVE. THE SITE CONTRACTOR SHALL ASSUME RESPONSIBILITY FOR THE MAINTENANCE OF EXISTING EROSION AND SEDIMENTATION CONTROLS AND FOR INSTALLATION OF ANY NEW SEDIMENT AND EROSION CONTROLS AS PER THE SEDIMENT AND EROSION CONTROL PLAN, AT THAT TIME.
55. THE CONTRACTOR SHALL PUMP OUT BUILDING FUEL AND WASTE OIL TANKS (IF ANY ARE ENCOUNTERED) AND REMOVE FUEL TO AN APPROVED DISPOSAL AREA BY A LICENSED WASTE OIL HANDLING CONTRACTOR IN STRICT ACCORDANCE WITH STATE REQUIREMENTS.
56. IF IMPACTED OR CONTAMINATED SOIL IS ENCOUNTERED BY THE CONTRACTOR, THE CONTRACTOR SHALL SUSPEND EXCAVATION WORK OF IMPACTED SOIL AND NOTIFY THE OWNER AND/OR OWNER'S ENVIRONMENTAL CONSULTANT PRIOR TO PROCEEDING WITH FURTHER WORK IN THE IMPACTED SOIL LOCATION UNTIL FURTHER INSTRUCTED BY THE OWNER AND/OR OWNER'S ENVIRONMENTAL CONSULTANT.
57. EXISTING WATER SERVICES SHALL BE DISCONNECTED AND CAPPED AT MAIN IN ACCORDANCE WITH THE REQUIREMENTS OF THE WATER UTILITY PROVIDER. REMOVE EXISTING ONSITE WATER PIPING TO BE ABANDONED TO RIGHT OF WAY LINE UNLESS OTHERWISE SHOWN ON DEMOLITION PLANS OR AS REQUIRED BY THE WATER UTILITY PROVIDER TO BE REMOVED TO MAIN.
58. EXISTING SANITARY LATERAL SHALL BE PLUGGED WITH NON-SHRINK GROUT AT CURB LINE OR AT MAIN CONNECTION IN ACCORDANCE WITH THE SANITARY UTILITY PROVIDER REQUIREMENTS. REMOVE EXISTING LATERAL PIPING FROM SITE UNLESS OTHERWISE SHOWN ON DEMOLITION PLANS OR AS REQUIRED BY THE SANITARY UTILITY PROVIDER.
59. DOMESTIC GAS SERVICES SHALL BE CAPPED AND SERVICE LINES PURGED OF RESIDUAL GAS IN ACCORDANCE WITH THE GAS UTILITY PROVIDER REQUIREMENTS. WORK TO BE COORDINATED BY AND PAID FOR BY THE CONTRACTOR. REMOVE EXISTING SERVICE PIPING ON SITE. ANY PROPANE TANKS SHALL BE PURGED OF RESIDUAL GAS BY PROPANE SUPPLIER. CONTRACTOR SHALL COORDINATE THIS WORK AND PAY NECESSARY FEES.
60. THE CONTRACTOR SHALL PROVIDE DISCONNECT NOTIFICATION TO THE MUNICIPALITY ENGINEERING DEPARTMENT, TELECOMMUNICATIONS UTILITY PROVIDER, GAS UTILITY PROVIDER, ELECTRIC UTILITY PROVIDER, SANITARY UTILITY PROVIDER, AND WATER UTILITY PROVIDER AT LEAST THREE WEEKS PRIOR TO BEGINNING DEMOLITION.
61. THE CONTRACTOR IS RESPONSIBLE FOR SECURING A DEMOLITION PERMIT FROM THE COUNTY BUILDING DEPARTMENT AND MUST FURNISH THE REQUIRED APPLICATION MATERIAL AND PAY ALL FEES.
62. BACK FILL DEPRESSIONS, FOUNDATION HOLES AND REMOVED DRIVEWAY AREAS IN LOCATIONS NOT SUBJECT TO FURTHER EXCAVATION WITH SOIL MATERIAL APPROVED BY THE OWNER'S GEOTECHNICAL ENGINEER AND COMPACT, FERTILIZE, SEED AND MULCH DISTURBED AREAS NOT SUBJECT TO FURTHER SITE CONSTRUCTION. DEMOLISHED BUILDING FOUNDATION AREA AND BASEMENT IF PRESENT TO BE BACKFILLED WITH GRAVEL FILL OR MATERIAL SPECIFIED IN THE PROJECT GEOTECHNICAL REPORT IN LIFT THICKNESS SPECIFIED IN THE GEOTECHNICAL REPORT. COMPACT TO 95% MAX. DRY DENSITY PER ASTM D1557 AT MOISTURE CONTENT SPECIFIED IN GEOTECHNICAL REPORT AND EARTHWORK SPECIFICATION. EMPLOY WATERING EQUIPMENT FOR DUST CONTROL.
63. THE CONTRACTOR SHALL REPAIR PAVEMENTS BY INSTALLING TEMPORARY AND PERMANENT PAVEMENTS IN PUBLIC RIGHTS OF WAYS AS REQUIRED BY LOCAL GOVERNING AUTHORITIES AND THE STATE AND PER PERMIT REQUIREMENTS DUE TO DEMOLITION AND PIPE REMOVAL ACTIVITIES.
64. THE CONTRACTOR SHALL CUT AND REMOVE AT LUMINARE AND SIGN LOCATIONS ANY PROTRUDING CONDUITS TO 24" BELOW GRADE. THE CONTRACTOR SHALL REMOVE ALL CABLE AND CONDUCTORS FROM REMAINING LIGHTING AND SIGNING CONDUITS TO BE ABANDONED. ANY REMAINING LIGHTING TO REMAIN IN PLACE SHALL BE RECIRCUITED OR REWIRED AS NECESSARY TO REMAIN IN OPERATION.
65. NO WORK ON THIS SITE SHALL BE INITIATED BY THE CONTRACTOR UNTIL A PRE-CONSTRUCTION MEETING WITH OWNER AND THE CIVIL ENGINEER IS PERFORMED. THE CONTRACTOR SHOULD BE AWARE OF ANY SITE INFORMATION AVAILABLE SUCH AS GEOTECHNICAL AND ENVIRONMENTAL REPORTS. THE CONTRACTOR SHALL HAVE MARK OUTS OF EXISTING UTILITIES COMPLETED PRIOR TO MEETING.
66. THE CONTRACTOR SHALL ARRANGE FOR AND INSTALL TEMPORARY OR PERMANENT UTILITY CONNECTIONS WHERE INDICATED ON PLAN OR AS REQUIRED. MAINTAIN UTILITY SERVICES TO BUILDINGS OR TO SERVICES TO REMAIN. CONTRACTOR TO COORDINATE WITH UTILITY PROVIDERS FOR INSTALLATION AND PAY UTILITY PROVIDER FEES.
67. THE CONTRACTOR SHALL NOT COMMENCE DEMOLITION OR UTILITY DISCONNECTIONS UNTIL AUTHORIZED TO DO SO BY THE OWNER.
68. THE CONTRACTOR OR DEMOLITION CONTRACTOR SHALL INSTALL TEMPORARY SHEETING OR SHORING AS NECESSARY TO PROTECT EXISTING AND NEW BUILDINGS, STRUCTURES AND UTILITIES DURING CONSTRUCTION AND DEMOLITION. SHEETING OR SHORING SHALL BE DESIGNED BY A PROFESSIONAL ENGINEER, LICENSED IN THIS STATE AND EVIDENCE OF SUCH SUBMITTED TO THE OWNER PRIOR TO INSTALLATION.
69. NO SALVAGE SHALL BE PERMITTED UNLESS PAID TO THE OWNER AS A CREDIT.
70. ANY EXISTING POTABLE WELL AND ANY EXISTING SEPTIC TANKS/ABSORPTION AREAS SHALL BE ABANDONED AND REMOVED PER THE TOWN OF SOUTH WINDSOR, CT DEEP AND HEALTH CODE REQUIREMENTS.
71. THE CONTRACTOR SHALL PRESERVE EXISTING VEGETATION WHERE POSSIBLE AND/OR AS NOTED ON DRAWINGS. REFER TO SEDIMENT AND EROSION CONTROL PLAN FOR LIMIT OF DISTURBANCE AND EROSION CONTROL NOTES.
72. TOPSOIL SHALL BE STRIPPED AND STOCKPILED ON SITE FOR USE IN FINAL LANDSCAPING.
73. SUBGRADE SHALL BE FORMED WITH REMOVAL AND REPLACEMENT OF FILL AND REMOVAL AND REPLACEMENT OF UNSUITABLE AND SOFT SUBGRADE MATERIAL AS REQUIRED BY THE GEOTECHNICAL ENGINEER. SEE GEOTECHNICAL REPORT AND EARTHWORK SPECIFICATIONS FOR FURTHER DESCRIPTION.
74. THE CONTRACTOR SHALL COMPACT FILL IN LIFT THICKNESS PER THE GEOTECHNICAL REPORT UNDER ALL PARKING, BUILDING, DRIVE, AND STRUCTURE AREAS TO 95% OF THE MAXIMUM DRY DENSITY AS DETERMINED BY ASTM D1557 (MODIFIED PROCTOR TEST), OR AS REQUIRED BY THE GEOTECHNICAL ENGINEER.
75. UNDERDRAINS SHALL BE ADDED, IF DETERMINED NECESSARY IN THE FIELD BY THE OWNER/GEOTECHNICAL ENGINEER, AFTER SUBGRADE IS ROUGH GRADED.
76. VERTICAL DATUM IS NAVD 88.
77. CLEARING LIMITS SHALL BE PHYSICALLY MARKED IN THE FIELD AND APPROVED BY THE TOWN OF SOUTH WINDSOR AGENT PRIOR TO THE START OF WORK ON THE SITE.
78. PROPER CONSTRUCTION PROCEDURES SHALL BE FOLLOWED ON ALL IMPROVEMENTS WITHIN THIS PARCEL SO AS TO PREVENT THE SILTING OF ANY WATERCOURSE OR WETLANDS IN ACCORDANCE WITH THE REGULATIONS OF THE CT DEEP AND THE 2002 CONNECTICUT GUIDELINES FOR SOIL EROSION AND SEDIMENT CONTROL, LATEST EDITION. IN ADDITION, THE CONTRACTOR SHALL STRICTLY ADHERE TO THE SEDIMENT AND EROSION CONTROL PLAN CONTAINED HEREIN. THE CONTRACTOR SHALL BE RESPONSIBLE TO POST ALL BONDS AS REQUIRED BY THE LOCAL MUNICIPALITIES, WHICH WOULD GUARANTEE THE PROPER IMPLEMENTATION OF THE PLAN.
79. ALL SITE WORK, MATERIALS OF CONSTRUCTION, AND CONSTRUCTION METHODS FOR EARTHWORK AND STORM DRAINAGE WORK SHALL CONFORM TO THE SPECIFICATIONS AND DETAILS AND APPLICABLE SECTIONS OF THE PROJECT SPECIFICATIONS MANUAL. OTHERWISE THIS WORK SHALL CONFORM TO THE STATE DEPARTMENT OF TRANSPORTATION SPECIFICATIONS AND PROJECT GEOTECHNICAL REPORT IF THERE IS NO PROJECT SPECIFICATIONS MANUAL. ALL FILL MATERIAL UNDER STRUCTURES AND PAVED AREAS SHALL BE PER THE ABOVE STATED APPLICABLE SPECIFICATIONS, AND/OR PROJECT GEOTECHNICAL REPORT, AND SHALL BE PLACED IN ACCORDANCE WITH THE APPLICABLE SPECIFICATIONS UNDER THE SUPERVISION OF A QUALIFIED PROFESSIONAL ENGINEER. MATERIAL SHALL BE COMPACTED IN LIFT THICKNESSES PER THE PROJECT GEOTECHNICAL REPORT TO 95% OF THE MAXIMUM DRY DENSITY AS DETERMINED BY ASTM D 1557 AT MOISTURE CONTENT INDICATED IN PROJECT GEOTECHNICAL REPORT.
80. ALL DISTURBANCE INCURRED TO MUNICIPAL, COUNTY, AND STATE PROPERTY DUE TO CONSTRUCTION SHALL BE RESTORED TO ITS PREVIOUS CONDITION OR BETTER, TO THE SATISFACTION OF THE MUNICIPALITY, COUNTY AND STATE AS APPLICABLE FOR THE LOCATION OF THE WORK.
81. ALL CONSTRUCTION WITHIN A DOT RIGHT OF WAY SHALL COMPLY WITH ALL DEPARTMENT OF TRANSPORTATION STANDARDS AND SPECIFICATIONS.
82. THE UTILITY PLAN DETAILS SITE INSTALLED PIPES UP TO 5' FROM THE BUILDING FACE. REFER TO DRAWINGS BY BL COMPANIES FOR BUILDING CONNECTIONS. SITE CONTRACTOR SHALL SUPPLY AND INSTALL PIPE ADAPTERS AS NECESSARY AT BUILDING CONNECTION POINT OR AT EXISTING UTILITY OR PIPE CONNECTION POINT.
83. THE CONTRACTOR SHALL VISIT THE SITE AND VERIFY THE ELEVATION AND LOCATION OF ALL UTILITIES BY VARIOUS MEANS PRIOR TO BEGINNING ANY EXCAVATION. TEST PITS SHALL BE DUG AT ALL LOCATIONS WHERE PROPOSED SANITARY SEWERS AND WHERE PROPOSED STORM PIPING WILL CROSS EXISTING UTILITIES, AND THE HORIZONTAL AND VERTICAL LOCATIONS OF THE UTILITIES SHALL BE DETERMINED. THE CONTRACTOR SHALL CONTACT THE CIVIL ENGINEER IN THE EVENT OF ANY DISCOVERED OR UNFORESEEN CONFLICTS BETWEEN EXISTING AND PROPOSED SANITARY SEWERS, STORM PIPING AND UTILITIES SO THAT AN APPROPRIATE MODIFICATION MAY BE MADE.
84. UTILITY CONNECTION DESIGN AS REFLECTED ON THE PLAN MAY CHANGE SUBJECT TO UTILITY PROVIDER AND GOVERNING AUTHORITY STAFF REVIEW.
85. THE CONTRACTOR SHALL ENSURE THAT ALL UTILITY PROVIDERS AND GOVERNING AUTHORITY STANDARDS FOR MATERIALS AND CONSTRUCTION METHODS ARE MET. THE CONTRACTOR SHALL PERFORM PROPER COORDINATION WITH THE RESPECTIVE UTILITY PROVIDER.
86. THE CONTRACTOR SHALL ARRANGE FOR AND COORDINATE WITH THE RESPECTIVE UTILITY PROVIDERS FOR SERVICE INSTALLATIONS AND CONNECTIONS. THE CONTRACTOR SHALL COORDINATE WORK TO BE PERFORMED BY THE VARIOUS UTILITY PROVIDERS AND SHALL PAY ALL FEES FOR CONNECTIONS, DISCONNECTIONS, RELOCATIONS, INSPECTIONS, AND DEMOLITION UNLESS OTHERWISE STATED IN THE PROJECT SPECIFICATIONS MANUAL AND/OR GENERAL CONDITIONS OF THE CONTRACT.
87. ALL EXISTING PAVEMENT WHERE UTILITY PIPING IS TO BE INSTALLED SHALL BE SAW CUT. AFTER UTILITY INSTALLATION IS COMPLETED, THE CONTRACTOR SHALL INSTALL TEMPORARY AND/OR PERMANENT PAVEMENT REPAIR AS DETAILED ON THE DRAWINGS OR AS REQUIRED BY THE OWNER HAVING JURISDICTION.
88. ALL PIPES SHALL BE LAID ON STRAIGHT ALIGNMENTS AND EVEN GRADES USING A PIPE LASER OR OTHER ACCURATE METHOD.
89. SANITARY LATERAL SHALL MAINTAIN (10' MIN. HORIZONTAL 1.5' VERTICAL MIN.) SEPARATION DISTANCE FROM WATER LINES, OR ADDITIONAL PROTECTION MEASURES WILL BE REQUIRED WHERE PERMITTED, WHICH SHALL INCLUDE CONCRETE ENCASEMENT OF PIPING UNLESS OTHERWISE DIRECTED BY THE UTILITY PROVIDERS AND CIVIL ENGINEER.
90. RELOCATION OF UTILITY PROVIDER FACILITIES SHALL BE DONE IN ACCORDANCE WITH THE REQUIREMENTS OF THE UTILITY PROVIDER.
91. THE CONTRACTOR SHALL COMPACT THE PIPE BACKFILL IN 8" LIFTS ACCORDING TO THE PIPE BEDDING DETAILS. TRENCH BOTTOM SHALL BE STABLE IN HIGH GROUNDWATER AREAS. A PIPE FOUNDATION SHALL BE USED PER THE TRENCH DETAILS AND IN AREAS OF ROCK EXCAVATION.
92. CONTRACTOR TO PROVIDE STEEL SLEEVES AND ANNULAR SPACE SAND FILL FOR UTILITY PIPE AND CONDUIT CONNECTIONS UNDER FOOTINGS.
93. BUILDING UTILITY PENETRATIONS AND LOCATIONS ARE SHOWN FOR THE CONTRACTOR'S INFORMATION AND SHALL BE VERIFIED WITH THE BUILDING MEP, STRUCTURAL, AND ARCHITECTURAL DRAWINGS AND WITH THE OWNER'S CONSTRUCTION MANAGER.
94. ALL UTILITY CONSTRUCTION IS SUBJECT TO INSPECTION FOR APPROVAL PRIOR TO BACKFILLING, IN ACCORDANCE WITH THE APPROPRIATE UTILITY PROVIDER REQUIREMENTS.
95. A ONE-FOOT MINIMUM VERTICAL CLEARANCE BETWEEN WATER, GAS, ELECTRICAL, AND TELEPHONE LINES AND STORM PIPING SHALL BE PROVIDED. A SIX-INCH MINIMUM CLEARANCE SHALL BE MAINTAINED BETWEEN STORM PIPING AND SANITARY SEWER WITH A C

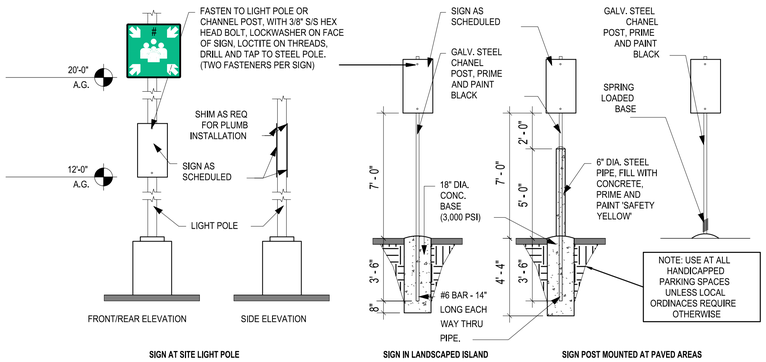

PARKING LOT SIGNS

Mounting U-p Description:
1. Panel signs with custom sign faces

Materials and Construction
1. The sign consists of an aluminum sign panel directly attached to an existing light pole. G.C. to verify w/light pole manufacturer that pole will structurally support sign
2. Solid aluminum panel, 0.125" thick. Composite materials are not acceptable.
3. Panel and light pole are drilled and tapped. Panel attaches with two 3/8" hex head bolts, assisted with lock washers and an application of " Loctite " adhesive.
4. The sign shall comply with all local codes. Supports shall be sufficient for secure mounting of the sign.
5. All hardware is to be non-corrosive. If additional thickness of material or additional internal bracing is required for secure installation of the signs or to provide stability to prevent warping such alterations shall be reflected in the shop drawings. Wind loading and durability shall be taken into account in engineering this sign.
6. Graphics and TypographySign graphics are heavy duty 3M vinyl.
7. Custom graphics and sign face layouts are available from the owner as electronic files.
8. Colors are indicated on the Design Intent Drawings. Additional color and finish specifications are found in the General Specifications.

Installation:
1. Locations are generally noted on the attached location plans. The contractor is responsible for field verifying all installation conditions prior to fabrication.
2. Bottom of sign panel installs varies.
3. The installation methods and details for each location shall be illustrated in the submitted shop drawings. Final locations will be approved on site by the tenant or his representative.

Submittals:
1. The following shall be submitted for approval prior to fabrication:
2. Electronic shop drawings are acceptable
3. Color samples to be submitted.

NOTES:
1.VERIFY POST SIZE WITH SIGN MOUNTING HEIGHTS.
2.THESE DETAILS PROVIDE INTENT ONLY. FINAL POST & CONNECTIONS SHALL BE SIZED MEETING LOCAL DOT STANDARDS.

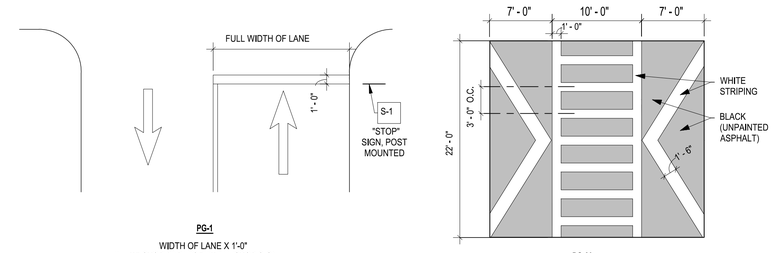

PG-1
WIDTH OF LANE X 1'-0"
WHITE STOP BAR. USE AT ALL STOP SIGN (S-1) LOCATIONS. WHITE PAVEMENT STRIPE.

PG-20
24'-0" X 22'-0"
WHITE PAVEMENT GRAPHICS - PEDESTRIAN TABLE. USE AT CROSSWALKS AT HIGH TRAFFIC AREAS PER SITE (EX. MAIN ENTRANCE) WHITE STRIPING ON RAISED ASPHALT TABLE.

3 DN-1 PAVEMENT GRAPHICS DETAILS
1/8" = 1'-0"

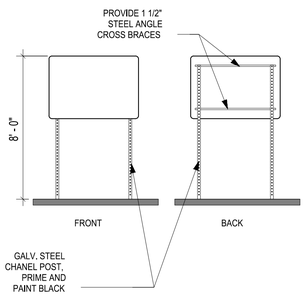

Post and Panel Signs Mounting U-1e, U-1c, U-2

Description:
1. Post and panel signs with standard sized DOT and custom sign faces

Materials and Construction:
1. The sign consists of an aluminum sign panel on a 2" square steel post
2. Panel conforms to MUTCD specifications. Solid aluminum, not less than 0.090" thick. Composite materials are not acceptable.
3. Post: 2" square steel post, 12 ga, 7/16" perforations on 1" centers, four sides, approx 12' o/a
4. The sign shall comply with all local codes. Supports shall be sufficient for secure mounting of the sign.
5. All hardware is to be non-corrosive. If additional thickness of material or additional internal bracing is required for secure installation of the signs or to provide stability to prevent warping such alterations shall be reflected in the shop drawings. Wind loading and durability shall be taken into account in engineering this sign.
6. Graphics and Typography
7. All signs indicated "DOT" shall conform to the current Manual on Uniform Traffic Control Devices from the Federal Highway Administration.
8. Sign graphics are heavy duty 3M reflective vinyl.
9. Custom graphics and sign face layouts are available from the owner as electronic files.
10. Colors are indicated on the Design Intent Drawings.

Installation:
1. Locations are generally noted on the attached location plans. The contractor is responsible for field verifying all installation conditions prior to fabrication.
2. Mounting U-1e shall be used in for signs in compacted earth; mounting U-1c shall be used for signs on concrete paving.
3. Mounting U-1e provides a 36" mounting tube (2¼" square steel post) driven to 1" to 2" above grade. The mounting tube is paired with an 18" breakaway support tube (2¼" square steel post). The sign post sinks to the base of the anchor tube and fastens to the anchor tube and breakaway support with an angle bolt.
4. Mounting U-1c provides a pedestal base married to the 2" post. The base is shimmed for plumb installation of he post and panel. The base fastens to the concrete paving with masonry anchors according to the base and anchor manufacturers' specifications.
5. Typical sign panel installs 7'0" above grade. The post extends to within 2" of the top of the sign panel. Installation shall be plumb, level and straight.
6. Mounting U-2 provides two pole support similar to mounting U-1e. Additionally, U-2 requires cross bracing of structural angle on the back of the sign face.
7. Top of the U-2 mounted sign installs 8'0" above grade. Installation shall be plumb, level and straight.
8. The installation methods and details for each location shall be illustrated in the submitted shop drawings. Final locations will be approved on site by the owner or his representative.

Submittals:
1. The following shall be submitted for approval prior to fabrication:
2. Electronic shop drawings are acceptable
3. Three 6" x 6" vinyl samples of each sign face color
4. See General Construction and Installation Specifications for additional submittals.

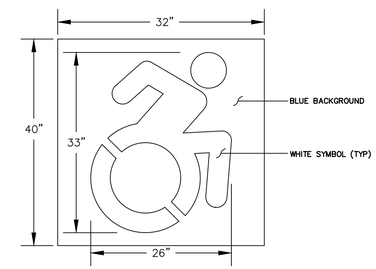

NOTE: HANDICAP SYMBOL TO ADHERE TO STATE BUILDING CODE, LATEST EDITION

4 DN-1 PAVEMENT GRAPHIC DETAILS
1/4" = 1'-0"

PAVEMENT GRAPHIC NOTES:
1. TWO COAT APPLICATION REQUIRED FOR ALL PAVEMENT GRAPHICS.
2. REFER TO CIVIL FOR PAINTED GRAPHIC ARROWS AND ADDITIONAL PAVEMENT GRAPHIC CRITERIA.

PAVEMENT PAINT

TA1/PP1	WHITE	
TA2/PP2	RED	(PANTONE 485C)
TA3/PP3	BLUE	(PANTONE 294)
TA4/PP4	GREEN	(PANTONE 342)
TA5/PP5	YELLOW	(PANTONE 116)

NOTE: TWO COAT APPLICATION REQUIRED FOR ALL PAVEMENT GRAPHICS.

VINYL GRAPHICS GENERAL NOTES

DOOR SIGNS:
SEE DOOR SIGN PLACEMENT DETAIL ON THIS SHEET FOR MOUNTING HEIGHTS.

SPECIFICATIONS:
SEE WORLDWIDE REAL ESTATE SIGNAGE STANDARDS (REV. 10) FOR COLOR GENERAL NOTES AND ADDITIONAL SIGNAGE COLORS.

DESCRIPTION:
CUSTOM CUT VINYL GRAPHICS, ATTACHED TO FIRST SURFACE OF EXTERIOR GLASS.

GRAPHICS AND TYPOGRAPHY:
SIGN GRAPHICS ARE HEAVY DUTY '3M' VINYL. LOGO IS A HIGH RESOLUTION DIGITAL PRINT ON PERMANENT ADHESIVE PRESSURE SENSITIVE VINYL SUBSTRATE WITH LUSTER OVER LAMINATE, CUT TO SHAPE FROM VECTOR FILE. COPY IS MATTE WHITE VINYL.

INSTALLATION:
LOCATIONS ARE GENERALLY NOTED ON THE ATTACHED LOCATION PLANS. THE CONTRACTOR IS RESPONSIBLE FOR FIELD VERIFYING ALL INSTALLATION CONDITIONS PRIOR TO FABRICATION. THE INSTALLATION METHODS AND DETAILS FOR EACH LOCATION SHALL BE ILLUSTRATED IN THE SUBMITTED SHOP DRAWINGS. FINAL LOCATION WILL BE APPROVED ON SITE BY THE TENANT REPRESENTATIVE.

SUBMITTALS:
THE FOLLOWING SHALL BE SUBMITTED FOR APPROVAL PRIOR TO FABRICATION - (3) SETS OF SHOP DRAWINGS AND (3) 6" X6" VINYL SAMPLES OF EACH SIGN FACE COLOR. SEE GENERAL CONSTRUCTION AND INSTALLATION SPECIFICATIONS FOR ADDITIONAL SUBMITTALS.

SIGNAGE GENERAL NOTES
1. FINAL QUANTITES SHALL BE COORDINATED AND VERIFIED IN FIELD.
2. ADDITIONAL SIGNAGE NOT SHOWN ON GRAPHICS PLAN MAY BE REQUIRED PER LOCAL CODE AND/OR AHJ. SUB-CONTRACTOR SHALL COORDINATE WITH LOCAL AHJ AND PROVIDE AS REQUIRED.
3. MOUNT SIGNAGE ACCORDING TO LOCAL CODES.
4. ALL PERMANENT SIGNANGE TO ACCESSIBLE AREAS TO HAVE RAISED BRAILLE CHARACTERS PER ANSI 117.1-2003
5. TYPICAL SIGN FONT IS SET IN ARIAL.
6. SEE DOOR SCHEDULE FOR DOOR SIGNAGE REQUIRED TEXT.

SITE SIGN MOUNTING DETAILS
DN-1 1/4" = 1'-0"

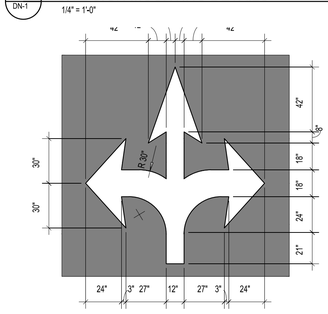

PG-9
10'-0" X 12'-0"
WHITE PAVEMENT GRAPHICS - LEFT, STRAIGHT OR RIGHT TURN ARROW. USE TO INDICATE TURNING LANES. (BLACK INDICATES ASPHALT)

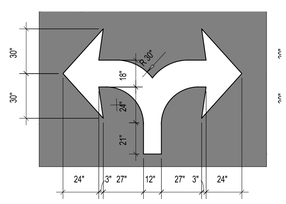

PG-8
10'-0" X 8'-0"
WHITE PAVEMENT GRAPHICS - LEFT OR RIGHT TURN ARROW. USE TO INDICATE TURNING LANES. (BLACK INDICATES ASPHALT)

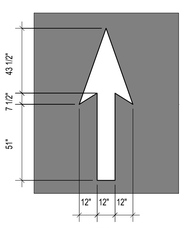

PG-5
8'-0" X 10'-0"
WHITE PAVEMENT GRAPHICS - STRAIGHT ARROW. USE TO DIRECT TRAFFIC AT ONE-WAY DRIVE AISLES. (BLACK INDICATES ASPHALT)

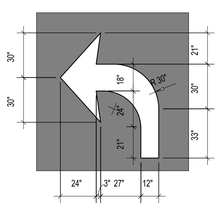

PG-6L (PG-6R OPP.)
8'-0" X 8'-0"
WHITE PAVEMENT GRAPHICS - LEFT TURN ARROW. USE TO INDICATE TURNING LANES. (BLACK INDICATES ASPHALT)

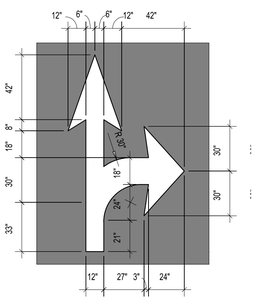

PG-7L (PG-7R OPP.)
8'-0" X 12'-0"
WHITE PAVEMENT GRAPHICS - STRAIGHT OR RIGHT TURN ARROW. USE TO INDICATE TURNING LANES. (BLACK INDICATES ASPHALT)

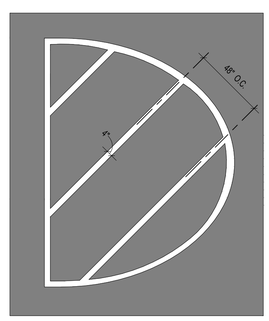

PG-10
4" STRIPING OUTLINE AND FILL AT 45 DEGREES. PAVEMENT GRAPHICS - TRAFFIC ISLAND. USE TO PROHIBIT VEHICLE TRAVEL AND PARKING. YELLOW AT NO TRAFFIC, BLUE AT ACCESSIBLE PARKING SPACES, WHITE AT VENDOR PARKING (BLACK INDICATES ASPHALT). INCLUDE AT EMERGENCY EXITS INTO THE PARKING LOT AT ALL PARKING SPACES THAT IMPEDE DIRECT ACCESS TO THE THOROUGHFARE.

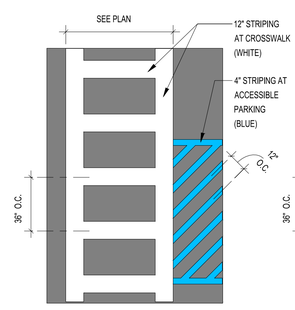

PG-11
WHITE 12" STRIPING OUTLINE AND HATCH FILL AT 36" O.C. PAVEMENT GRAPHICS - PEDESTRIAN CROSSWALK. USE TO INDICATE PEDESTRIAN CROSSING. SEE PLAN FOR WIDTH OF CROSSWALK (BLACK INDICATES ASPHALT)

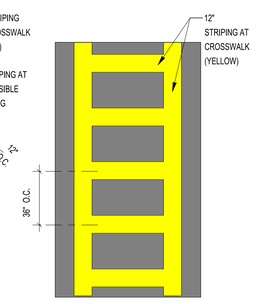

PG-12
YELLOW 12" STRIPING OUTLINE AND HATCH FILL AT 36" O.C. PAVEMENT GRAPHICS - DRIVER ENTRANCE. USE TO DIRECT DRIVER ENTRANCE IN DOCK FIELD. POSITION IN TRUCK COURT TO CORRESPOND WITH THE LOCATION OF THE TRUCKERS LOUNGE AND TRUCKERS ENTRY POINTS. SEE PLAN FOR WIDTH OF CROSSWALK (BLACK INDICATES ASPHALT)

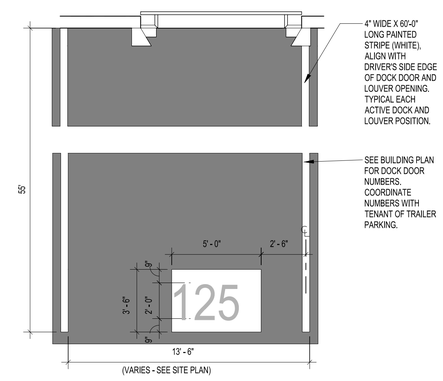

PG-14
WHITE 5'-0" X 3'-6" (24" TALL LETTERING) PAVEMENT GRAPHICS - TRAILER SPACE NUMBERING. USE TO LABEL TRAILER SPACES. TYPICAL ALL TRUCK DOCK SPACES. (BLACK INDICATES ASPHALT). SEE PLANS FOR DOCK DOOR NUMBERS. COORDINATE NUMBERS WITH TENANT OF TRAILER PARKING.

FOR PERMITTING PURPOSES ONLY NOT RELEASED FOR CONSTRUCTION

© 2020 BL COMPANIES, INC. THESE DRAWINGS SHALL NOT BE UTILIZED BY ANY PERSON, FIRM OR CORPORATION WITHOUT THE SPECIFIC WRITTEN PERMISSION OF BL COMPANIES.

Architecture Engineering Environmental Land Surveying
BL Companies
355 Research Parkway
Meriden, CT 06450
(203) 630-1406
(203) 630-2615 Fax

STATE OF CONNECTICUT MATTHEW T. BUDNY No. 22314 LICENSED PROFESSIONAL ENGINEER

PROPOSED WAREHOUSE
240 ELLINGTON ROAD
SOUTH WINDSOR, HARTFORD COUNTY, CONNECTICUT

REVISIONS No.	Date	Desc.

Designed	A.J.S.
Drawn	S.E.L.
Reviewed	
Scale	NONE
Project No.	2001166
Date	11/20/2020
CAD File: DN200116601	

Title
DETAILS SHEET

Sheet No.
DN-1

Xref (s) : BD200116601

11/20/2020, 1:19 PM ALL ON LOCKED LYR OFF LAYOUT: DN-1 DETAILS

USE AND/OR LOCATION TO BE VERIFIED BY THE TENANT PRIOR TO CONSTRUCTION

TENANT LOGO
TRUCK ENTRANCE

AS-6
36" X 24"
TENANT SIGNAGE - TRUCK ENTRANCE USE AT DEMARCATE TRUCK ENTRANCE. POST (X2) AND PANEL MOUNT. WHITE TEXT (ARIAL) ON BLACK BACKGROUND.

TENANT LOGO
DSP ENTRANCE

AS-8
36" X 24"
TENANT SIGNAGE - DSP ENTRANCE USE AT DEMARCATE DSP ENTRANCE. POST (X2) AND PANEL MOUNT. WHITE TEXT (ARIAL) ON BLACK BACKGROUND.

USE AND/OR LOCATION TO BE VERIFIED BY THE TENANT PRIOR TO CONSTRUCTION

TENANT LOGO
TRAILERS MUST BE 3 FT FROM WALL

AS-10
36" X 24"
TENANT SIGNAGE - TRAILERS MUST BE 3FT FROM WALL USE AT TRAILER PARKING SPACES ALONG BUILDING WALL. PROVIDE ONE SIGN PER GROUP OF PARKING SPACES. MOUNT PANEL DIRECTLY TO EXTERIOR OF BUILDING FACADE. WHITE TEXT (ARIAL) ON BLACK BACKGROUND.

TENANT LOGO
NO ENTRANCE

AS-13
36" X 24"
TENANT SIGNAGE - NO ENTRANCE USE TO PROHIBIT ENTRY AT ACCESS DRIVES. MOUNT TO OUTWARD FACING SIDE OF GATE OR FENCE. WHITE TEXT (ARIAL) ON BLACK BACKGROUND.

USE AND/OR LOCATION TO BE VERIFIED BY THE TENANT PRIOR TO CONSTRUCTION

TENANT LOGO
NO EXIT

AS-14
36" X 24"
TENANT SIGNAGE - NO EXIT USE TO PROHIBIT EXITING AT ACCESS DRIVES. MOUNT TO INSIDE FACING SIDE OF GATE OR FENCE. WHITE TEXT (ARIAL) ON BLACK BACKGROUND.

USE AND/OR LOCATION TO BE VERIFIED BY THE TENANT PRIOR TO CONSTRUCTION

TENANT LOGO
EXIT

AS-15
36" X 24"
TENANT SIGNAGE - EXIT USE AT GUARD HOUSE EXIT. MOUNT AT 6" A.F.G. TO BOTTOM. WHITE TEXT (ARIAL) ON BLACK BACKGROUND. ADJUST ARROW PER LOCATION.

USE AND/OR LOCATION TO BE VERIFIED BY THE TENANT PRIOR TO CONSTRUCTION

TENANT LOGO
VISITORS & ASSOCIATES
ALL TRUCKS

AS-53
36" X 24"
TENANT SIGNAGE - SORTATION WAYFINDING USE AT SORTATION SITES AS NECESSARY FOR WAYFINDING. POST AND PANEL MOUNT. WHITE TEXT (ARIAL) ON BLACK BACKGROUND. ADJUST TEXT AND ARROW(S) DIRECTION BASED ON SITE LOCATION.

USE AND/OR LOCATION TO BE VERIFIED BY THE TENANT PRIOR TO CONSTRUCTION

AS-26
36" X 36"
TENANT SIGNAGE - MUSTER AREA REPLACE "#" WITH CORRESPONDING AREA NUMBER; SEE PLAN. POLE MOUNT AT 15'-0" A.F.G. IN CAR PARKING. POLE MOUNT AT 20'-0" A.F.G. IN TRAILER YARD (MEASURED AT BOTTOM OF SIGN) WHITE GRAPHICS ON GREEN BACKGROUND.

5 DN-2 SIGNS
NTS

WHITE TEXT ON RED BACKGROUND

S-1
36" X 36"
DOT STANDARD OCTAGONAL "STOP" SIGN. USE AT INTERSECTIONS IN PARKING LOT AND DRIVE AISLES. POST AND PANEL MOUNT.

WHITE TEXT W/ RED GRAPHIC ON WHITE BACKGROUND

S-2
30" X 30"
DOTSTANDARD "DONOT ENTER" SIGN. USE TO PROHIBIT TRAVEL IN THE WRONG DIRECTION. TYPICAL AT ONE-WAY ROADS. POST AND PANEL MOUNT.

BLACK TEXT ON WHITE BACKGROUND

S-3
30" X 36"
DOT STANDARD "SPEED LIMIT 5 MPH" SIGN. USE TO CONTROL SPEED ALONG DRIVE AISLES WITHOUT ADJACENT PARKING SPOTS. POST AND PANEL MOUNT.

S-4
30" X 36"
DOT STANDARD "SPEED LIMIT 10 MPH" SIGN. USE TO CONTROL SPEED ALONG DRIVE AISLES WITHOUT ADJACENT PARKING POTS. POST AND PANEL MOUNT.

WHITE TEXT ON RED BACKGROUND

S-5
30" X 30"
DOT STANDARD SQUARE PEDESTRIAN CROSSING "STOP" SIGN, LEFT ARROW. USE AT PEDESTRIAN CROSSWALKS LOCATED IN THE MIDDLE OF DRIVE AISLES. POST AND PANEL MOUNT.

S-6
30" X 30"
DOT STANDARD SQUARE PEDESTRIAN CROSSING "STOP" SIGN, RIGHT ARROW. USE AT PEDESTRIAN CROSSWALKS LOCATED IN THE MIDDLE OF DRIVE AISLES. POST AND PANEL MOUNT.

BLACK TEXT AND GRAPHICS ON WHITE BACKGROUND

BLACK TEXT AND GRAPHIC ON WHITE BACKGROUND

S-7
30" X 36"
DOT STANDARD VERTICALLY ORIENTED "ONE WAY" LEFT ARROW SIGN. USE ALONG ONE WAY DRIVE AISLES. POST AND PANEL MOUNT.

S-8
30" X 36"
DOT STANDARD VERTICALLY ORIENTED "ONE WAY" RIGHT ARROW SIGN. USE ALONG ONE WAY DRIVE AISLES. POST AND PANEL MOUNT.

BLACK TEXT AND GRAPHIC ON WHITE BACKGROUND

S-9
30" X 36"
DOT STANDARD LEFT TURN "ONLY" SIGN. USE ALONG ONE WAY DRIVE AISLES. POST AND PANEL MOUNT.

S-9R
30" X 36"
DOT STANDARD RIGHT TURN "ONLY" SIGN. USE ALONG ONE WAY DRIVE AISLES. POST AND PANEL MOUNT.

BLACK GRAPHIC ON WHITE BACKGROUND

RED CIRCLE

S-11L
24" X 24"
DOTSTANDARD "NO LEFT TURN" SIGN. USE TO PROHIBIT TURNING TRAFFIC. POST AND PANEL MOUNT.

S-12
24" X 24"
DOT STANDARD "NO U TURN" SIGN. USE TO PROHIBIT TURNING TRAFFIC. POST AND PANEL MOUNT.

WHITE GRAPHIC ON BLUE BACKGROUND

WHITE TEXT ON BLUE BACKGROUND

S-15
12" X 18"
DOT STANDARD VERTICALLY ORIENTED ACCESSIBLE "PARKING ONLY" SIGN. USE TO DEMARCATE ACCESSIBLE PARKING SPACES. ONE SIGN PER SPACE OR AS REQUIRED BY LOCAL AUTHORITY. POST AND PANEL MOUNT.

S-16
12" X 18"
DOT STANDARD VERTICALLY ORIENTED "VAN ACCESSIBLE" PARKING SIGN. USE TO DEMARCATE VAN ACCESSIBLE PARKING SPACES. ONE SIGN PER SPACE OR AS REQUIRED BY LOCAL AUTHORITY. POST AND PANEL MOUNT.

6 DN-2 SITE SIGNS
1/2"=1'-0"

S-18
30" X 36"
DOT STANDARD "EXIT" SIGN, RIGHT ARROW. POST AND PANEL MOUNT WHERE APPROPRIATE.

S-19
30" X 36"
DOT STANDARD "EXIT" SIGN, LEFT ARROW. POST AND PANEL MOUNT WHERE APPROPRIATE.

S-20
30" X 24
DOTSTANDARD MEDIAN SYMBROL WITH RIGHT DIRECTING ARROW. POST AND PANEL OUNT WHERE APPROPRIATE.

S-21
12" X 18"
RED ON WHITE REFLECTORIZED BACKGROUND (NOTE - THIS SIGN IS SHOWN ON BOTH CIVIL AND PARTIAL SITE SIGNAGE PLANS FOR CONTINUNITY ONLY. DO NOT PRICE INDEPENDENTLY)

USE AND/OR LOCATION TO BE VERIFIED BY THE TENANT PRIOR TO CONSTRUCTION

AS-23
12" X 18
TENANT SIGNAGE - ASSOCIATE OF THE MONTH. PROVIDE 4 ASSOCIATE OF THE MONTH PARKING SPACES NEAR THE MAIN ENTRY. POST AND PANEL MOUNT. ONE SIGN PER PARKING SPACE. BLACK TEXT (ARIAL NARROW) ON WHITE BACKGROUND

USE AND/OR LOCATION TO BE VERIFIED BY THE TENANT PRIOR TO CONSTRUCTION

AS-30
12" X 18"
TENANT SIGNAGE - NON-SMOKING AREA LOCATE OUTSIDE BUILDING ENTRANCES AT NON-COVERED PICNIC TABLES. PROVIDE X2 AT SORT AND X1 AT NON-SORT & SORTATION. POST AND PANEL MOUNT. BLACK TEXT 'ARIAL NARROW) ON WHITE BACKGROUND, BLUE

AS-31
12" X 18"
TENANT SIGNAGE - CUSTOMER PARKING LOCATE OUTSIDE BUILDING AT CUSTOMER PARKING SPACES. BLACK TEXT (ARIAL NARROW) ON WHITE BACKGROUND

USE AND/OR LOCATION TO BE VERIFIED BY THE TENANT PRIOR TO CONSTRUCTION

DROP-OFF AND PICK-UP ONLY
TENANT LOGO
NO PARKING

AS-22
12"X18"

ASSOCIATE OF THE MONTH
TENANT LOGO

AS-23
12"X18"

VISITOR PARKING
TENANT LOGO

AS-24
12"X18"

VENDOR PARKING
TENANT LOGO

AS-25
12"X18"

USE AND/OR LOCATION TO BE VERIFIED BY THE TENANT PRIOR TO CONSTRUCTION

MOTORCYCLE PARKING
TENANT LOGO

AS-29
12"X18"

NON-SMOKING AREA
TENANT LOGO

AS-30
12"X18"

CUSTOMER PARKING
TENANT LOGO

AS-31
12"X18"

NOTE:
1. AS-16 LAYOUT SHALL BE SITE SPECIFIC. DETAILS SHOWN ARE FOR DELIVERY STATION BUILDING PROTOTYPE BASE ON SIGN LOCATION SHOWN ON SHEETS SS101 ORIENTATION OF ARROWS AND SITE AREAS SHALL BE BASED ON SIGN LOCATION.
2. ADDITIONAL TENANT SIGNAGE MAY BE ADDED ON INDIVIDUAL SITE BASIS.

9 DN-2 SITE SIGNS
1"=1'-0"

USE AND/OR LOCATION TO BE VERIFIED BY THE TENANT PRIOR TO CONSTRUCTION

AS-0#, AS -B (#), AS-R(#), AS-G#, AS-P#, AS-Y#
24"X24"

18" HIGH X 24" WIDE WHITE ACRYLIC SIGN WITH 10" HIGH BLACK LETTERING (ARIAL FONT) CENTERED ABOVE DOOR ON EXTERIOR SIDE OF DOOR

22'-0" A.F.G.

AS-26(#)
26"X26"
MUSTER AREA
(MOUNT ON LIGHT POLE)

10 DN-2 SITE SIGNS
NTS

7 DN-2 SITE SIGNS
NTS

S-3 (MOD)
30" X 30" SIGN AND 18" X 18" PLACARD
MUTCD: W8-1 AND W13-1P

S-4 (MOD)
30" X 30" SIGN AND 18" X 18" PLACARD
MUTCD: W8-1 AND W13-1P

S-13
24" X 24"
MUTCD: R5-2

S-14
24" X 24"
MUTCD: R8-3

S-17
18" X 12"

USE AND/OR LOCATION TO BE VERIFIED BY THE TENANT PRIOR TO CONSTRUCTION

All Trucks

FACING PLAN SOUTH

Visitors and Associates
Delivery Service Provider Parking
All Trucks

FACING PLAN NORTH

PYLON SIGN 1

Visitors and Associates
Customers
All Trucks

FACING PLAN SOUTH

Visitors and Associates
Customers
Delivery Service Provider Parking

FACING PLAN NORTH

PYLON SIGN 2

NOTE:
1. ADDITIONAL MUTCD COMPLAIANT SIGNAGE MAY BE ADDED ON AN INDIVIDUAL SITE BASIS.

NOTES:
1. PLACARD LAYOUT SHALL BE SITE SPECIFIC. DETAIL SHOWN IS FOI SPECIFIC PROTOTYPE. ORIENTATION OF ARROWS ALL BE BASED ON PYLON SIGN LOCATION.

PLACARD DETAIL

TENANT LOGO
TENANT
Street Address
Municipality, State
-- VERIFY YOUR ADDRESS --
There may be multiple tenant locations in the area

AS-1
60"X48"
ADDRESS SIGN
DOUBLE (U-2) POST

TENANT LOGO
Visitors Trucks
No Trespassing.
No Weapons on this Property.
Smoking in designated areas.
Security cameras in use.

AS-2
60"X48"
ADDRESS SIGN
DOUBLE (U-2) POST

TENANT LOGO
YARD RULES
1. Tandems must be in rear position upon entering yard.
2. No idling on tenant property.
3. Drivers responsible for opening/closing trailer doors.
4. Speed limit 5 mph.
5. Under no circumstances may a driver hook up to a trailer with a red dock light. Drivers should only hook up to a trailer where directed by tenant personnel.

AS-5
48"X60"
ADDRESS SIGN
DOUBLE (U-2) POST

USE AND/OR LOCATION TO BE VERIFIED BY THE TENANT PRIOR TO CONSTRUCTION

TENANT LOGO
DRIVER'S LOUNGE

AS-7
36"X24"
DOUBLE (U-2) POST

TENANT LOGO
RECEIVING DRIVER ENTRANCE

AS-8
36"X24"
DOUBLE (U-2) POST

USE AND/OR LOCATION TO BE VERIFIED BY THE TENANT PRIOR TO CONSTRUCTION

TENANT LOGO
SHIPPING DRIVER ENTRANCE

AS-9
36"X24"
DOUBLE (U-2) POST

TENANT LOGO
TRACTOR PARKING

AS-10
36"X24"
DOUBLE (U-2) POST

USE AND/OR LOCATION TO BE VERIFIED BY THE TENANT PRIOR TO CONSTRUCTION

TENANT LOGO
Drop-Off / Pick-Up
Customers

AS-16 (2)
48"X60"
WAY FINDING
DOUBLE (U-2) POST

TENANT LOGO
Loading Zone
Van Drivers
Delivery Services Provider Parking

AS-16 (3)
48"X60"
WAY FINDING
DOUBLE (U-2) POST

TENANT LOGO
DROP-OFF/ PICK-UP

AS-17 (L) SHOWN
AS-17 (R) OPP.
AS-17 (S) STRAIGHT
36"X24"
DOUBLE (U-2) POST

8 DN-2 SITE SIGNS
1/2"=1'-0"

USE AND/OR LOCATION TO BE VERIFIED BY THE TENANT PRIOR TO CONSTRUCTION

SITE SIGNAGE COLOR GENERAL NOTES

ALL SIGNS INDICATED "DOT" SHALL CONFORM TO COLOR AND REFLECTANCE SPECIFICATIONS OF THE MUTCD

MUTCD (MANUAL ON UNIFORM TRAFFIC CONTROL DEVICES)
HTTP://MUTCD.FHWA.DOT.GOV/KNO-COLORSPEC.HTM

MUTCD COLOR SPECIFICATIONS
COLOR SPECIFICATIONS (23 CFR 655) THE COLOR SPECIFICATIONS ARE USED TO DETERMINE THE COLOR OF SIGN SHEETING AND PAVEMENT MARKING MATERIALS FOR DESIGN PURPOSES. MOST OF THE COLOR SPECIFICATIONS WERE LAST REVISED BY THE FINAL RULE; AMENDMENT DATED NOVEMBER 21, 2002. HOWEVER, SOME COLOR SPECIFICATIONS WERE REVISED AND SPECIFICATIONS FOR SOME NEW COLORS WERE ADDED BY THE FINAL RULE DATED DECEMBER 16, 2009. VISIT THE ABOVE LINK FOR MORE INFO.

PANTONE MATCHING COLORS
THE FOLLOWING ARE PANTONE SPECIFICATIONS, FOR PRINTING PURPOSES. THEY PROVIDE A GUIDE FOR SELECTING APPROPRIATE LINK COLORS TO CLOSELY MATCH THE STANDARD COLORS OF TRAFFIC CONTROL SIGNS. NOTE: THERE ARE NO PANTONES AVAILABLE FOR FLUORESCENT COLOR SIGNS.

PANTONE SPECIFICATIONS FOR PRINTING
BROWN - 469, RED - 187, YELLOW - 116, PURPLE - 259, GREEN - 342, BLUE - 294, ORANGE - 152

CUSTOM SIGNAGE COLORS

	Gloss Vinyl	Reflective Vinyl
C1 White	Scotchcal White 230-20	Scotchcal 280i White 280-10
C2 Black	Scotchcal Black 230-22 (Pantone BlackC)	Scotchcal Black 280-85
C3 Yellow	Oracal OPAQUE 020 GOLDEN YELLOW TRANSLUCENT 015 YELLOW ORANGE (Color to match tenant branding guidelines. Tenant Orange = Pantone 137 U, Pantone 1375 C)	
C4 Gray	Scotchcal Medium Gray 230-31	
C5 Red	Scotchcal Red 230-33 (Pantone 485C2X)	Scotchcal Red 280-72
C6 Blue	Scotchcal Cobalt Blue (Pantone 288C)	Scotchcal Blue 230-75
C7 Blue	Scotchcal Tenant Blue (Pantone 2995C) (RAL 5012)	

FOR PERMITTING PURPOSES ONLY
NOT RELEASED FOR CONSTRUCTION

© 2020 BL COMPANIES, INC. THESE DRAWINGS SHALL NOT BE UTILIZED BY ANY PERSON, FIRM OR CORPORATION WITHOUT THE SPECIFIC WRITTEN PERMISSION OF BL COMPANIES.

Architecture Engineering Environmental Land Surveying
BL Companies
355 Research Parkway
Meriden, CT 06450
(203) 630-1406
(203) 630-2615 Fax

STATE OF CONNECTICUT
MATTHEW J. BUDNY
No. 22324
LICENSED PROFESSIONAL ENGINEER

PROPOSED WAREHOUSE
240 ELLINGTON ROAD
SOUTH WINDSOR, HARTFORD COUNTY, CONNECTICUT

REVISIONS
No. Date Desc.

Designed A.J.S.
Drawn S.E.L.
Reviewed
Scale NONE
Project No. 2001166
Date 11/20/2020
CAD File: DN200116601

Title
DETAILS SHEET

Sheet No.
DN-2

Xref (s) : BI2020116601

L:\PROJECTS\2001166 - 240 ELLINGTON RD, SOUTH WINDSOR\DWG\DN200116601.DWG\DN-2-SIGNS.DWG

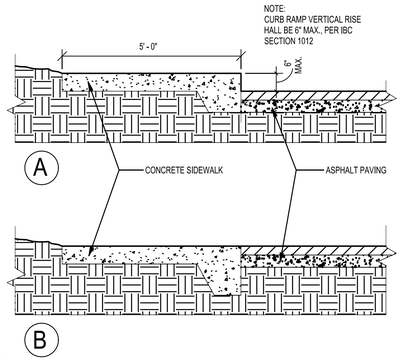

1 DN-3 ACCESSIBLE RAMP CURB
1/2" = 1'-0"

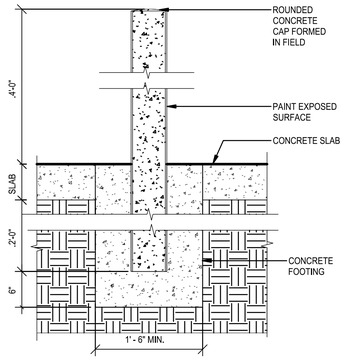

2 DN-3 PIPE BOLLARD DETAIL
1" = 1'-0"

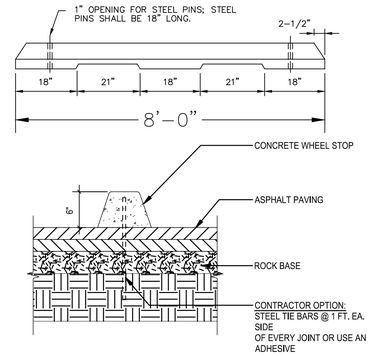

3 DN-3 WHEEL STOP
1" = 1'-0"

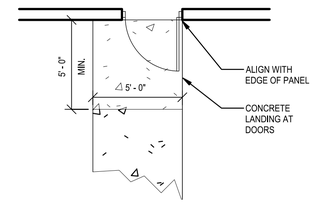

4 DN-3 DOOR LANDING PLAN
1/4" = 1'-0"

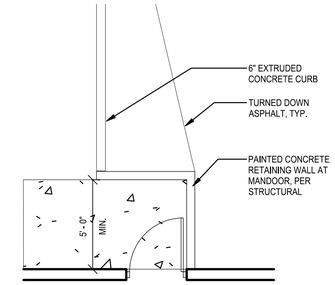

5 DN-3 RAMP LANDING PLAN
1/4" = 1'-0"

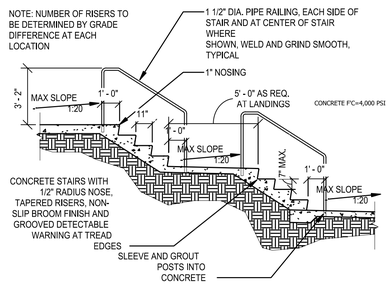

6 DN-3 CONCRETE STAIR SECTION
1/4" = 1'-0"

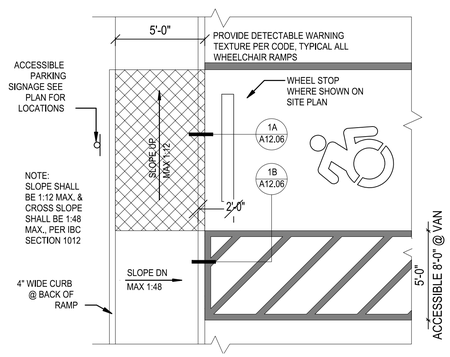

7 DN-3 ACCESSIBLE RAMP
1/4" = 1'-0"

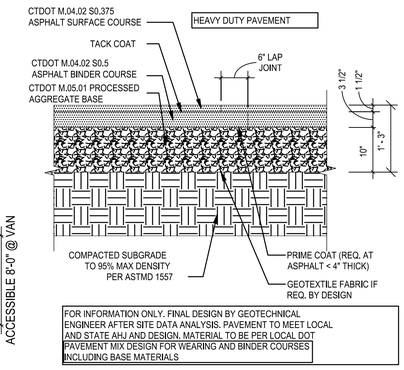

FOR INFORMATION ONLY. FINAL DESIGN BY GEOTECHNICAL ENGINEER AFTER SITE DATA ANALYSIS. PAVEMENT TO MEET LOCAL AND STATE AHJ AND DESIGN. MATERIAL TO BE PER LOCAL DOT PAVEMENT MIX DESIGN FOR WEARING AND BINDER COURSES INCLUDING BASE MATERIALS

8 DN-3 HEAVY DUTY BITUMINOUS CONCRETE PAVEMENT STRUCTURE
3/4" = 1'-0"

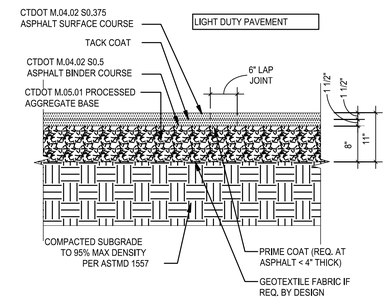

FOR INFORMATION ONLY. FINAL DESIGN BY GEOTECHNICAL ENGINEER AFTER SITE DATA ANALYSIS. PAVEMENT TO MEET LOCAL AND STATE AHJ AND DESIGN. MATERIAL TO BE PER LOCAL DOT PAVEMENT MIX DESIGN FOR WEARING AND BINDER COURSES INCLUDING BASE MATERIALS

9 DN-3 STANDARD DUTY BITUMINOUS CONCRETE PAVEMENT STRUCTURE
3/4" = 1'-0"

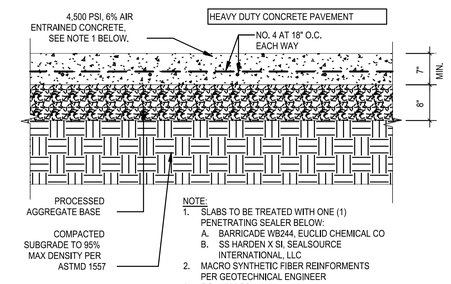

FOR INFORMATION ONLY. FINAL DESIGN BY GEOTECHNICAL ENGINEER AFTER SITE DATA ANALYSIS. PAVEMENT TO MEET LOCAL AND STATE AHJ AND DESIGN. MATERIAL TO BE PER LOCAL DOT PAVEMENT MIX DESIGN FOR WEARING AND BINDER COURSES INCLUDING BASE MATERIALS

10 DN-3 HEAVY DUTY CONCRETE PAVEMENT AND PAD
3/4" = 1'-0"

ALL EXTERIOR BUILDING SIGNAGE TO BE A DEFERRED SUBMITTAL BY THE GENERAL CONTRACTOR

COORDINATE WITH EQUIPMENT MANUFACTURER

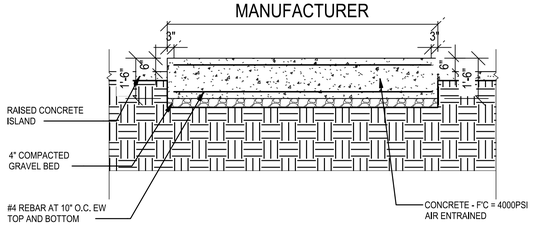

11 DN-3 EQUIPMENT PAD DETAIL
3/8" = 1'-0"

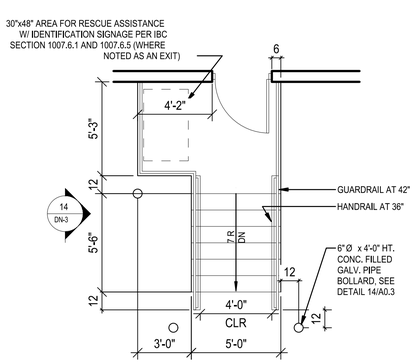

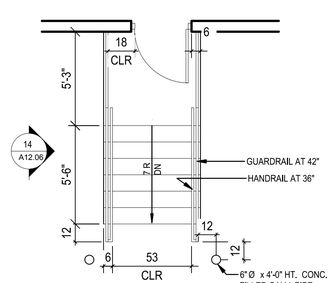

NOTE:
SEE EXTERIOR METAL
FINISH SPECIFICATIONS.

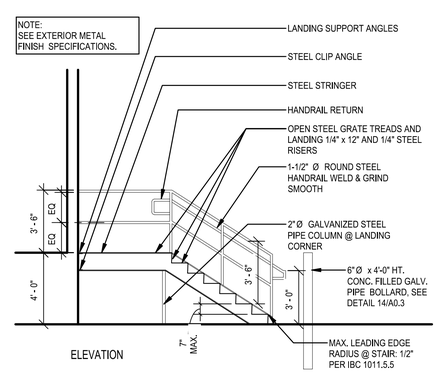

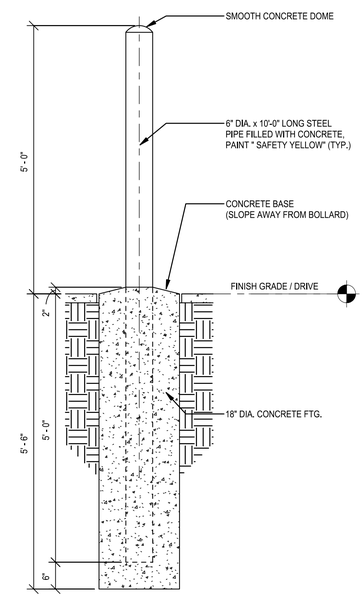

15 DN-3 BOLLARD DETAIL - TRANSFORMER
3/4" = 1'-0"

FOR PERMITTING PURPOSES ONLY
NOT RELEASED FOR CONSTRUCTION

© 2020 BL COMPANIES, INC. THESE DRAWINGS SHALL NOT BE UTILIZED BY ANY PERSON, FIRM OR CORPORATION WITHOUT THE SPECIFIC WRITTEN PERMISSION OF BL COMPANIES.

Architecture
Engineering
Environmental
Land Surveying
BL Companies
355 Research Parkway
Meriden, CT 06450
(203) 630-1406
(203) 630-2615 Fax

STATE OF CONNECTICUT
MATTHEW J. BUDNY
No. 20208
LICENSED
PROFESSIONAL ENGINEER

PROPOSED WAREHOUSE
240 ELLINGTON ROAD
SOUTH WINDSOR, HARTFORD COUNTY, CONNECTICUT

REVISIONS
No. Date Desc.

Designed	A.J.S.
Drawn	S.E.L.
Reviewed	
Scale	NONE
Project No.	2001166
Date	11/20/2020
CAD File: DN200116601	

Title
DETAILS SHEET

Sheet No.
DN-3

Xref (s) : : BD200116601

L:\F2F\2001_WRHALL_G_LOBGDS\LYD-2001166-WRHALL\DWG\DR\2001166D-DN-3-24X36.dwg

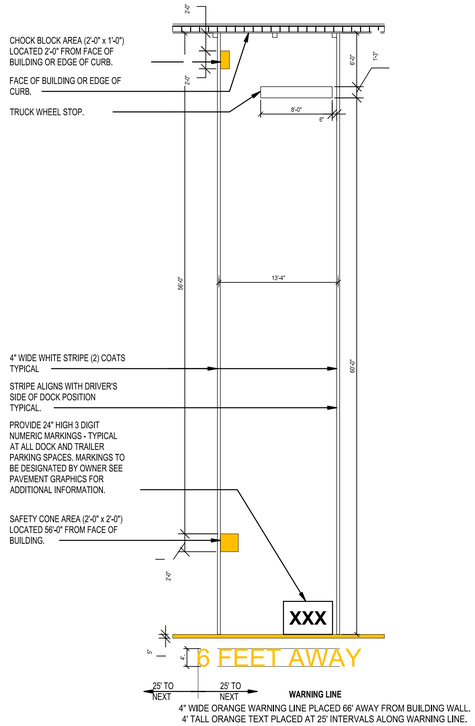

16 DN-4 TRAILER PARKING

1/8" = 1'-0"

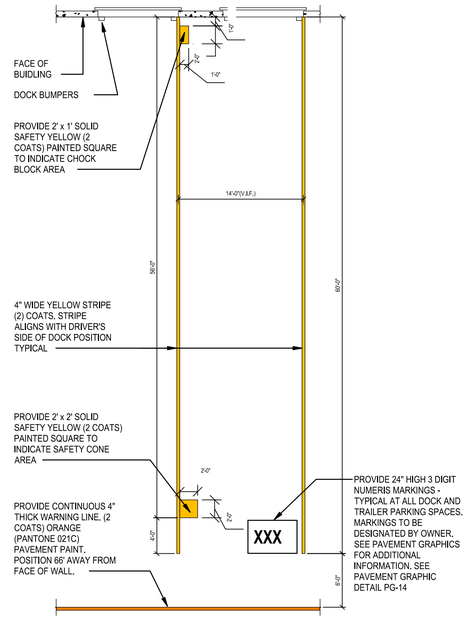

17 DN-4 TYPICAL TRAILER PARKING AT DOCK

1/8" = 1'-0"

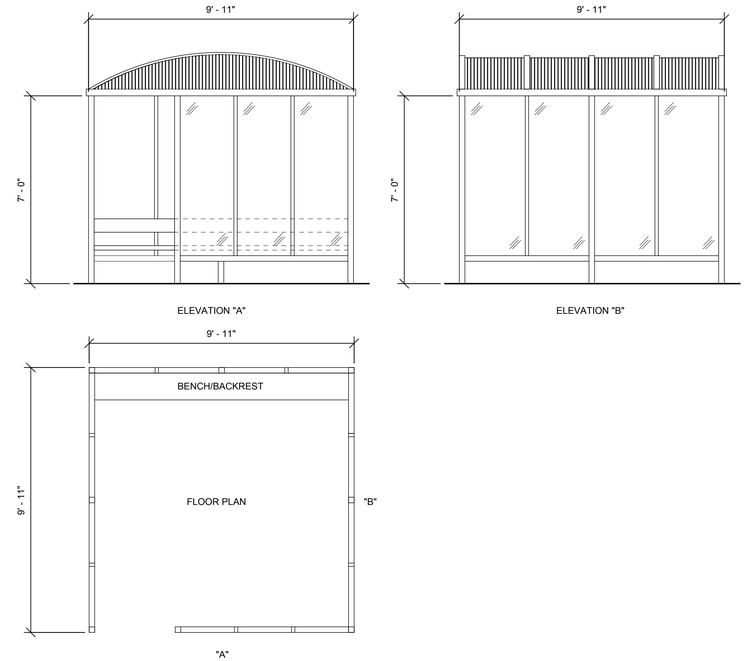

18 DN-4 PREFABRICATED SMOKER'S SHELTER PLAN ELEVATION

3/8" = 1'-0"

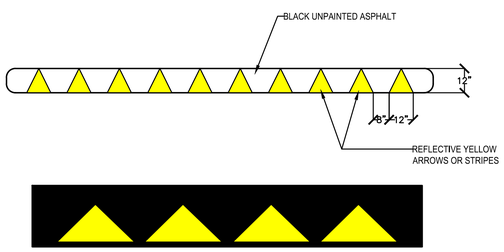

PG-16

12'-0" X 1'-0"

PAVEMENT GRAPHICS - SMALL SPEED BUMPS. USE TO CONTROL SPEED AT INTERIOR DRIVE AISLES. THERMAL APPLIED REFLECTIVE YELLOW ARROWS. ASPHALT SPEED BUMPS SHALL BE USED IN COLDER CLIMATES WHERE SNOW REMOVAL EQUIPMENT IS INTENDED TO BE USED. RUBBER SPEED BUMPS MAY BE USED IN WARMER CLIMATES OR REGIONS WHERE CONCRETE PAVEMENT IS PREVALENT.

PAVEMENT GRAPHICS - SMALL SPEED BUMP

1/2" = 1'-0"

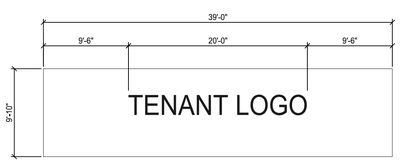

TYPICAL BUILDING SIGN DESIGN

(SUBJECT TO CHANGE BASED ON LOCAL REGULATIONS AND SITE CONDITIONS)

- INTERNALLY ILLUMINATED LOGO SIGN BY SIGN MANUFACTURER
- PROVIDE POWER TO JUNCTION BOX AT INSIDE FACE OF PRECAST CONCRETE PANEL WALL
- LOCATION OF SIGN BASED ON BUILDING ORIENTATION AND MAIN ENTRY

20 DN-4 TYPICAL BUILDING SIGN

NTS

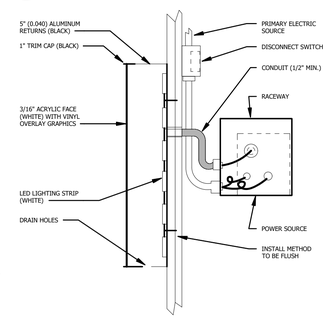

BUILDING SIGN MOUNTING DETAIL (N.T.S)

4' TALL WHITE PAVEMENT GRAPHICS APPLIED AT ENTRY, EXIT AND BOTH DIRECTIONS OF TRAFFIC FLOW. SPEED LIMIT MARKING SHOULD BE PLACED 75' AFTER ANY TURN AND CONTINUE 300' THEREAFTER.

21 DN-4 SPEED ON ROAD

1/4" = 1'-0"

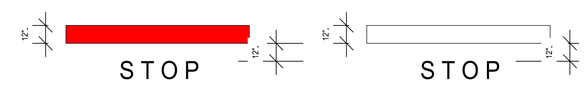

RED STOP LINE

USED ONLY AT GUARDHOUSE FOR VEHICLE ENTRY LANES 1 AND 2, AND VEHICLE EXIT LANES 1 AND 2.

WHITE STOP LINE

USED WHEN LEAVING TENANT PROPERTY AT ANY INTERSECTION, WHEN MAKING A TURN LESS THAN 90 DEGREES, WHEN CROSSING DIRECTIONAL TRAFFIC, AND WHEN AN OVERFLOW SECONDARY TRAILER PARKING AREA INTERSECTS WITH THE TRAILER YARD.

VEHICLE STOP LINE

12" WIDE VEHICLE STOP LINE USED TO DESIGNATE WHEN A VEHICLE MUST COME TO A FULL COMPLETE STOP BEFORE MOVING FORWARD AND/OR MAKING A TURN.

18 DN-4 VEHICLE STOP LINE

NTS

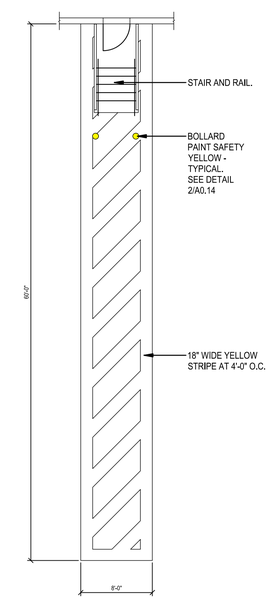

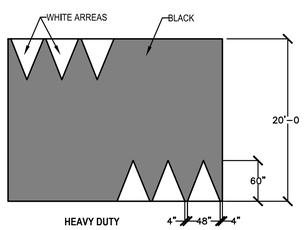

HEAVY DUTY RUBBER SPEED HUMP

PG-15

20'-0" WIDE

PAVEMENT GRAPHICS - LARGE SPEED BUMP. USE TO CONTROL SPEED AT OUTLYING DRIVE AREAS. WHITE THERMAL APPLIED WHITE ARROWS. ASPHALT SPEED HUMPS SHALL BE USED IN COLDER CLIMATES WHERE SNOW REMOVAL EQUIPMENT IS INTENDED TO BE USED. RUBBER SPEED HUMPS MAY BE USED IN WARMER CLIMATES OR REGIONS WHERE CONCRETE PAVEMENT IS PREVALENT.

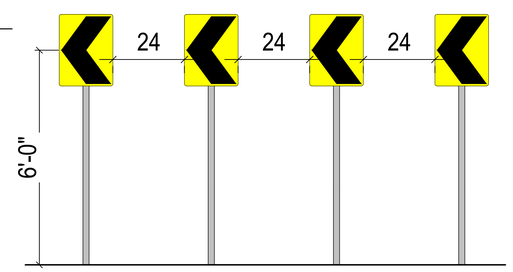

CHEVRON SIGN

18"X24"

INSTALL CHERONS 6' HIGH, MOUNTED TO EITHER A STRUCTURE OR SIGN POST. BLACK LETTERING ON SAFETY YELLOW RECLECTIVE BACKGROUND. PROVIDE SIGN WHERE SHARP BENDS ARE PRESENT WITHIN THE YARD AND/ OR VEHICLE TRAVEL PATH

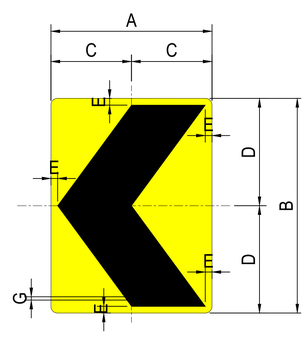

A B	C	D	E	F	G
12 X 18	6"	9"	.5"	1.5"	.375"
18 X 24	9"	12"	.75"	1.5"	.375"
SIGN SIZE	WIDTH	HEIGHT	EDGE TO IMAGE	CORNER RADIUS	HOLE SIZE

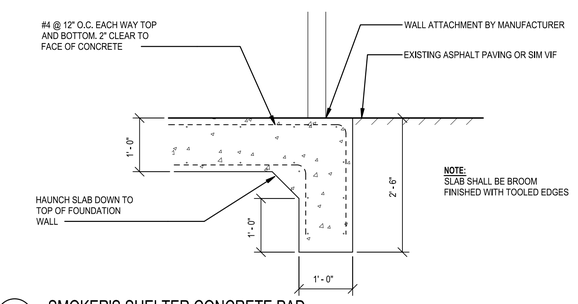

NOTE:
SLAB SHALL BE BROOM FINISHED WITH TOOLED EDGES

25 DN-4 SMOKER'S SHELTER CONCRETE PAD

3/4" = 1'-0"

FOR PERMITTING PURPOSES ONLY
NOT RELEASED FOR CONSTRUCTION

Architecture
Engineering
Environmental
Land Surveying

BL Companies

355 Research Parkway
Meriden, CT 06450
(203) 630-1406
(203) 630-2615 Fax

STATE OF CONNECTICUT
MATTHEW T. BUTCHY
No. 22581
LICENSED
PROFESSIONAL ENGINEER

PROPOSED WAREHOUSE

240 ELLINGTON ROAD
SOUTH WINDSOR, HARTFORD COUNTY, CONNECTICUT

REVISIONS

No.	Date	Desc.

Designed	A.J.S.
Drawn	S.E.L.
Reviewed	
Scale	NONE
Project No.	2001166
Date	11/20/2020
CAD File: DN200116601	

Title

DETAILS SHEET

Sheet No.

DN-4

Xref (s): BC200116601

11/20/2020, 1:19:04 AM, C:\CADD\2001\2001166\DWG\DN200116601.DWG DN-4 24X36

© 2020 BL COMPANIES, INC. THESE DRAWINGS SHALL NOT BE UTILIZED BY ANY PERSON, FIRM OR CORPORATION WITHOUT THE SPECIFIC WRITTEN PERMISSION OF BL COMPANIES.

MADRAX

MADRAX DIVISION
GRABER MANUFACTURING, INC.
1991 UNICK DRIVE
WAUNAKEE, WI 53597
P(800) 448-7931, P(608) 849-1888, F(608) 849-1881
WWW.MADRAX.COM, E-MAIL: SALES@MADRAX.COM

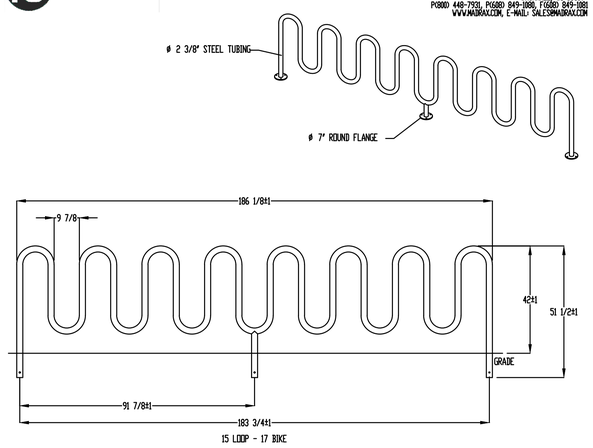

CHECK DESIRED MOUNT

PRODUCT: HW238-17-IG(SF)
DESCRIPTION: HEAVY DUTY WINDER BIKE RACK
17 BIKE, SURFACE OR IN GROUND MOUNT

DATE: 10-16-18
ENG: SMC

CONFIDENTIAL DRAWING AND INFORMATION IS NOT TO BE COPIED OR DISCLOSED TO OTHERS WITHOUT THE CONSENT OF GRABER MANUFACTURING, INC. SPECIFICATIONS ARE SUBJECT TO CHANGE WITHOUT NOTICE.

©2018 GRABER MANUFACTURING, INC. ALL PROPRIETARY RIGHTS RESERVED.

NOTES:
1. INSTALL BIKE RACKS ACCORDING TO MANUFACTURER'S SPECIFICATIONS.
2. CONSULTANT TO SELECT COLOR (FINISH). SEE MANUFACTURER'S SPECIFICATIONS.
3. SEE SITE PLAN FOR LOCATION OR CONSULT OWNER.

35 DN-6 PREFABRICATED BIKE RACK
3/8" = 1'-0"

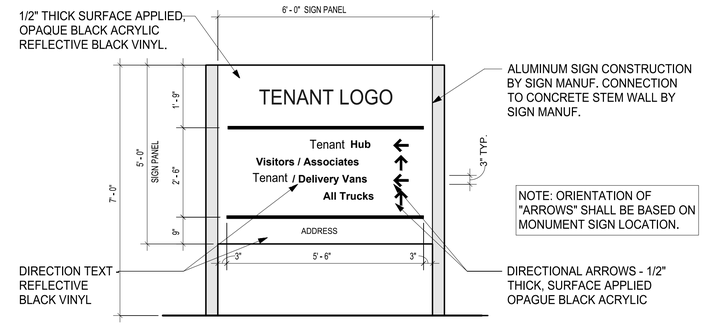

TYPICAL ENTRY SIGN DESIGN
(SUBJECT TO CHANGE BASED ON LOCAL REGULATIONS AND SITE CONDITIONS.)
DIRECTIONAL ARROWS CHANGE BASED ON LOCATIONS OF SIGN

29 DN-5 7 FOOT PYLON OPTION
1/2" = 1'-0"

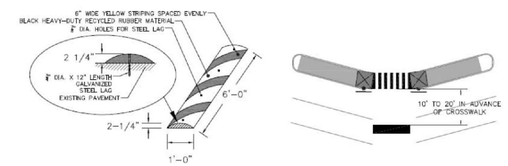

HEAVY DUTY RUBBER SPEED BUMP DETAIL
N.T.S.

NOTES:
1. HEAVY DUTY SPEED BUMPS SHALL BE USED IN LOCATIONS WHERE SNOW IS A NOT CONCERN.

TYPICAL SPEED BUMP LOCATION DETAIL
N.T.S.

NOTES:
1. SPEED BUMP IS NOT DRAWN TO SCALE AND IS SHOWN AS SUCH FOR CLARITY.

LAG BOLT METHOD (ASPHALT OR CONCRETE ONLY)

A. Tools needed:
   a. High speed hammer drill with a ¾" masonry drill bit.
   b. Impact wrench or heavy ratchet with ¾" socket
B. Position the speed bump in accordance with Contract Drawings. Using the holes molded in the speed bump as templates, mark the location of each hole on the surface.
C. Remove the speed bump. Using a high-speed hammer drill with a ¾" masonry bit, drill a 4" to 4½" deep hole at each marked location.
D. Insert a lag anchor (with the large round hole in the anchor facing up) into each hole. Tap the anchor into the holes with a hammer so that the top of each anchor is flush with the surface.
E. Reposition the speed bump so that the molded in holes line up vertically with the drilled holes. Starting with the center hole, apply firm hand pressure. Slip a washer onto a lag bolt, insert the bolt through the hole in the speed bump and tighten the bolt about three quarters of the way with a ¾" socket. Repeat for each hole in the speed bump. Finish tightening each bolt until just snug. DO NOT OVER-TIGHTEN. Excessive tightening may damage the speed bump and will void the manufacturer's warranty.

32 DN-5 SPEED BUMP- RUBBER
N.T.S.

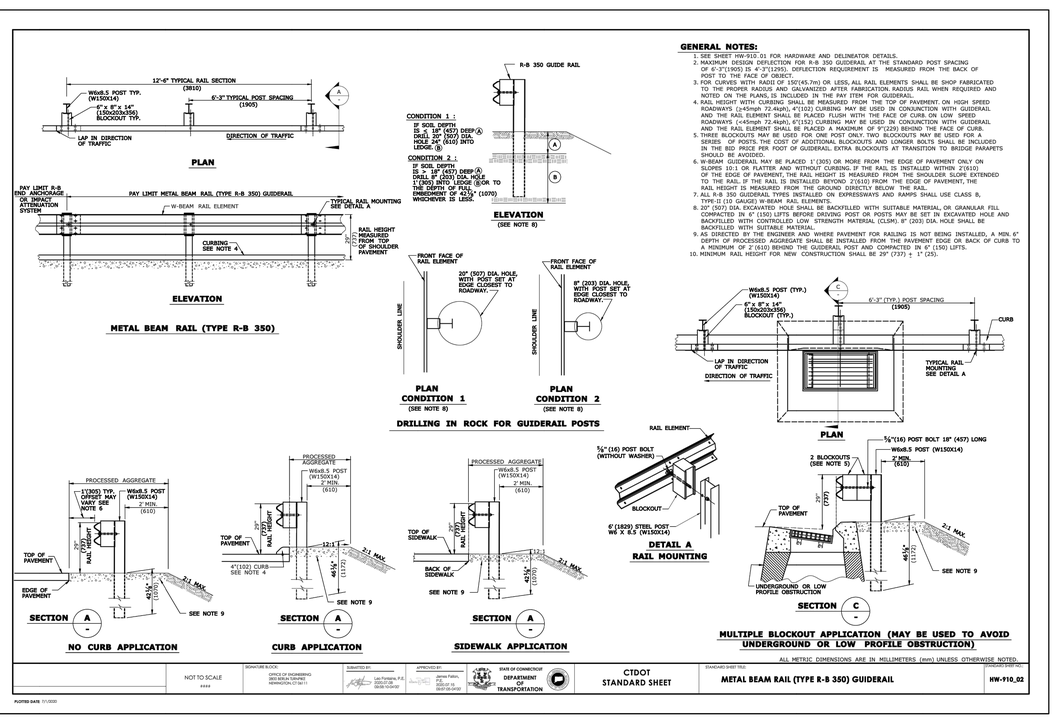

GENERAL NOTES:

1. SEE SHEET HW-910_01 FOR HARDWARE AND DELINEATOR DETAILS.
2. MAXIMUM DESIGN DEFLECTION FOR R-B 350 GUIDERAIL AT THE STANDARD POST SPACING OF 6'-3"(1905) IS 4'-3"(1295). DEFLECTION REQUIREMENT IS MEASURED FROM THE BACK OF POST TO THE FACE OF OBJECT.
3. FOR CURVES WITH RADII OF 150'(46.7m) OR LESS, ALL RAIL ELEMENTS SHALL BE SHOP FABRICATED AND HOT-DIP GALVANIZED AFTER FABRICATION. RADIUS RAIL WHEN REQUIRED AND NOTED ON THE PLANS IS INCLUDED IN THE PAY ITEM FOR GUIDERAIL.
4. RAIL HEIGHT WITH CURBING SHALL BE MEASURED FROM THE TOP OF PAVEMENT. ON HIGH SPEED ROADWAYS (≥45mph 72.4kph), 4"(102) CURBING MAY BE USED IN CONJUNCTION WITH GUIDERAIL AND THE RAIL ELEMENT SHALL BE PLACED FLUSH WITH THE FACE OF CURB. ON LOW SPEED ROADWAYS (<45mph 72.4kph), 6"(152) CURBING MAY BE USED IN CONJUNCTION WITH GUIDERAIL AND THE RAIL ELEMENT SHALL BE PLACED A MAXIMUM OF 9"(229) BEHIND THE FACE OF CURB.
5. THREE BLOCKOUTS MAY BE USED FOR ONE POST ONLY. TWO BLOCKOUTS MAY BE USED FOR A SERIES OF POSTS. THE COST OF ADDITIONAL BLOCKOUTS AND LONGER BOLTS SHALL BE INCLUDED IN THE BID PRICE PER POOT OF GUIDERAIL. EXTRA BLOCKOUTS AT TRANSITION TO BRIDGE PARAPETS SHOULD BE AVOIDED.
6. W-BEAM GUIDERAIL MAY BE PLACED 1'(305) OR MORE FROM THE EDGE OF PAVEMENT ONLY ON SLOPES 10:1 OR FLATTER AND WITHOUT CURBING. IF THE RAIL IS INSTALLED WITHIN 2'(610) OF THE EDGE OF PAVEMENT, THE RAIL HEIGHT IS MEASURED FROM THE SHOULDER. SLOPE EXTENDED TO THE RAIL. IF THE RAIL IS INSTALLED BEYOND 2'(610) FROM THE EDGE OF PAVEMENT, THE RAIL HEIGHT IS MEASURED FROM THE GROUND DIRECTLY BELOW THE RAIL.
7. ALL R-B 350 GUIDERAIL TYPES INSTALLED ON EXPRESSWAYS AND RAMPS SHALL USE CLASS B, 12'-6"(3810) SECTIONS WITH 6'-3"(1905) POSTS.
8. 20"(507) DIA. EXCAVATED HOLE SHALL BE BACKFILLED WITH SUITABLE MATERIAL OR GRANULAR FILL COMPACTED IN 6" (150) LIFTS BEFORE DRIVING POST OR POSTS MAY BE SET IN EXCAVATED HOLE AND BACKFILLED WITH CONTROLLED LOW STRENGTH MATERIAL (CLSM). 8" (203) DIA. HOLE SHALL BE BACKFILLED WITH SUITABLE MATERIAL.
9. AS DIRECTED BY THE ENGINEER AND WHERE PAVEMENT FOR RAILING IS NOT BEING INSTALLED, A MIN. 6" DEPTH OF PROCESSED AGGREGATE SHALL BE INSTALLED FROM THE PAVEMENT EDGE OR BACK OF CURB TO A MINIMUM OF 2'(610) BEHIND THE GUIDERAIL POST AND COMPACTED IN 6" (150) LIFTS.
10. MINIMUM RAIL HEIGHT FOR NEW CONSTRUCTION SHALL BE 29" (737) ± 1" (25).

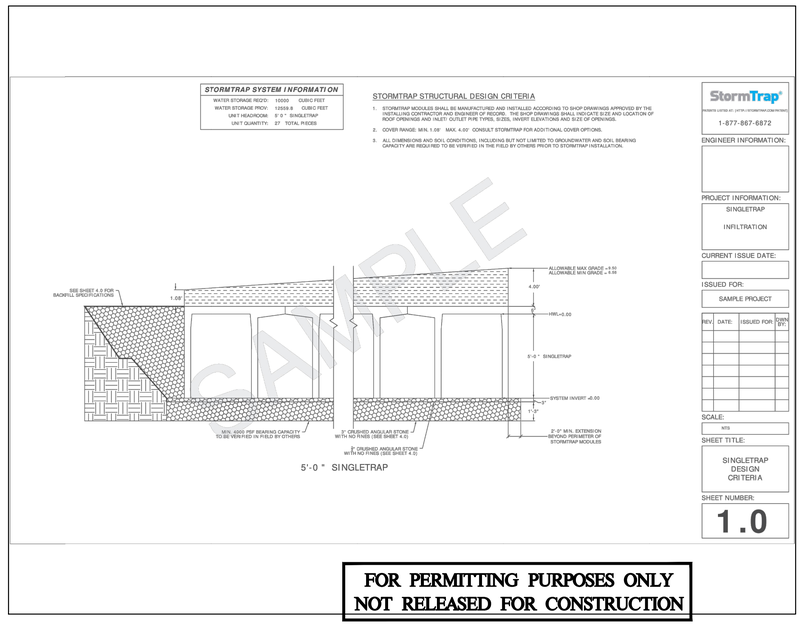

FOR PERMITTING PURPOSES ONLY
NOT RELEASED FOR CONSTRUCTION

Architecture
Engineering
Environmental
Land Surveying
BL Companies
355 Research Parkway
Meriden, CT 06450
(203) 630-1406
(203) 630-2615 Fax

STATE OF CONNECTICUT MATTHEW T. BUDZYNSKI No. 20584 LICENSED PROFESSIONAL ENGINEER

PROPOSED WAREHOUSE
240 ELLINGTON ROAD
SOUTH WINDSOR, HARTFORD COUNTY, CONNECTICUT

REVISIONS
No. Date Desc.

Designed A.J.S.
Drawn S.E.L.
Reviewed
Scale NONE
Project No. 2001166
Date 11/20/2020
CAD File: DN200116601

Title
DETAILS SHEET

Sheet No.
DN-5

Xref (s): : BK200116601

11/20/2020, HRAUB, C:\JOBS\S\SVS\2001166\DWG\DN200116601.DWG-DN-5.24X36.

© 2020 BL COMPANIES, INC. THESE DRAWINGS SHALL NOT BE UTILIZED BY ANY PERSON, FIRM OR CORPORATION WITHOUT THE SPECIFIC WRITTEN PERMISSION OF BL COMPANIES.

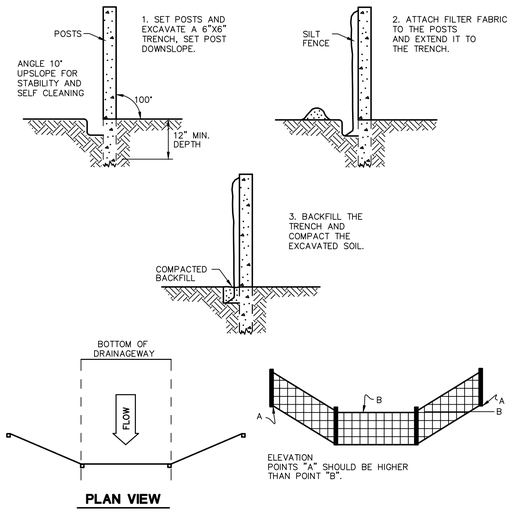

SILT FENCE BARRIER

N.T.S. CTEC–003

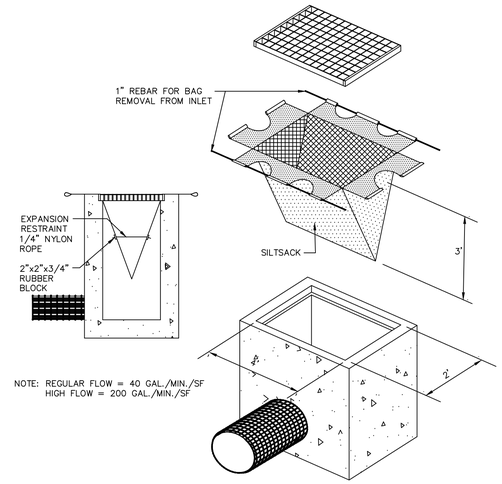

SILTSACK DETAIL

N.T.S. BLEC–005

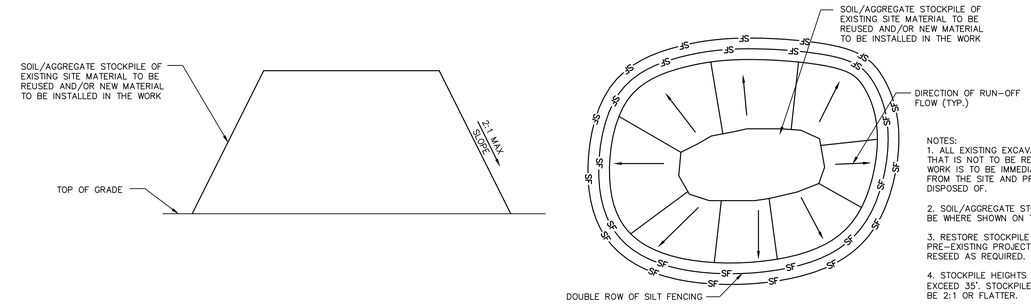

NOTES:
1. ALL EXISTING EXCAVATED MATERIAL THAT IS NOT TO BE REUSED IN THE WORK IS TO BE IMMEDIATELY REMOVED FROM THE SITE AND PROPERLY DISPOSED OF.

2. SOIL/AGGREGATE STOCKPILE SITES TO BE WHERE SHOWN ON THE DRAWINGS.

3. RESTORE STOCKPILE SITES TO PRE–EXISTING PROJECT CONDITION AND RESEED AS REQUIRED.

4. STOCKPILE HEIGHTS MUST NOT EXCEED 35'. STOCKPILE SLOPES MUST BE 2:1 OR FLATTER.

MATERIALS STOCKPILE DETAIL

N.T.S. BLEC–006

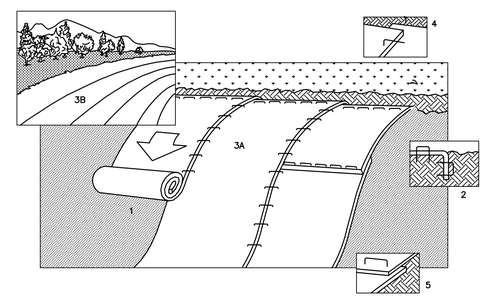

1. PREPARE SOIL BEFORE INSTALLING BLANKETS, INCLUDING APPLICATION OF LIME, FERTILIZER,AND SEED.

2. BEGIN AT THE TOP OF THE SLOPE BY ANCHORING THE BLANKET IN 6" DEEP X 6" WIDE TRENCH. BACKFILL AND COMPACT THE TRENCH AFTER STAPLING.

3. ROLL THE BLANKETS (A.) DOWN OR (B.) HORIZONTALLY ACROSS THE SLOPE.

4. THE EDGES OF PARALLEL BLANKETS MUST BE STAPLED WITH APPROXIMATELY 2" OVERLAP.

5. WHEN BLANKETS MUST BE SPLICED DOWN THE SLOPE, PLACE BLANKETS END OVER END (SHINGLE STYLE) WITH APPROXIMATELY 4" OVERLAP. STAPLE THROUGH OVERLAPPED AREA, APPROXIMATELY 12" APART.

EROSION CONTROL BLANKET

N.T.S. BLEC–010

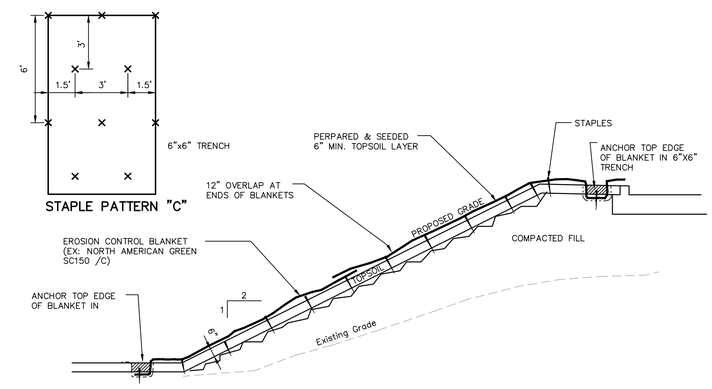

EROSION CONTROL BLANKET ON FILL SLOPE

N.T.S. BLEC–009

* WHERE SEDIMENTS CONTAIN LESS THAN 80% SAND, A 100 FT MINIMUM IS REQUIRED.

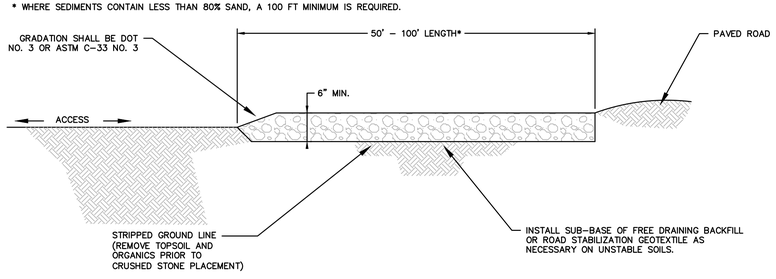

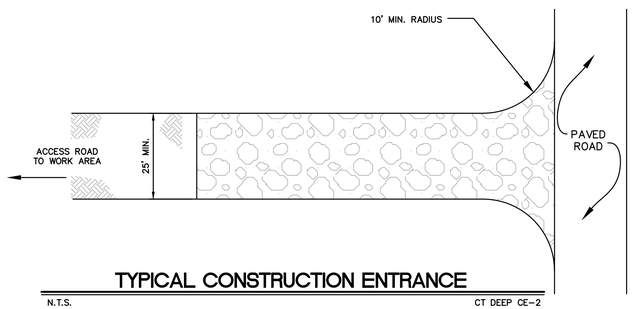

TYPICAL CONSTRUCTION ENTRANCE

N.T.S. CT DEEP CE–2

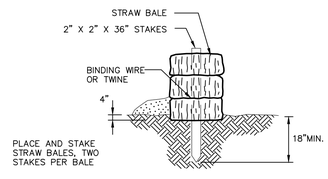

STRAW BALE BARRIERS SHOULD NOT BE USED FOR MORE THAN 3 MONTHS

SEDIMENT MUST BE REMOVED WHEN ACCUMULATIONS REACH 1/3 THE ABOVE GROUND HEIGHT OF THE BARRIER.

ANY SECTION OF STRAW BALE BARRIER WHICH HAS BEEN UNDERMINED OR TOPPED MUST BE IMMEDIATELY REPLACED WITH A ROCK FILTER OUTLET.

STRAW BALE DETAIL

N.T.S. BLEC–007

FOR PERMITTING PURPOSES ONLY
NOT RELEASED FOR CONSTRUCTION

© 2020 BL COMPANIES, INC. THESE DRAWINGS SHALL NOT BE UTILIZED BY ANY PERSON, FIRM OR CORPORATION WITHOUT THE SPECIFIC WRITTEN PERMISSION OF BL COMPANIES.

Architecture
Engineering
Environmental
Land Surveying
BL Companies
355 Research Parkway
Meriden, CT 06450
(203) 630-1406
(203) 630-2615 Fax

STATE OF CONNECTICUT
MATTHEW J. BUCHOLTZ
No. 20294
LICENSED
PROFESSIONAL ENGINEER

PROPOSED WAREHOUSE
240 ELLINGTON ROAD
SOUTH WINDSOR, HARTFORD COUNTY, CONNECTICUT

REVISIONS

No.	Date	Desc.

Designed	A.J.S.
Drawn	S.E.L.
Reviewed	
Scale	NONE
Project No.	2001166
Date	11/20/2020
CAD File: DN200116601	

Title
DETAILS SHEET

Sheet No.
DN-6

Xref (s) : B020011601

11/20/2020, HRBALLI, G:\JOBS\2011\2001166\DWG\DN\B011601.DWG DN-6 24X36

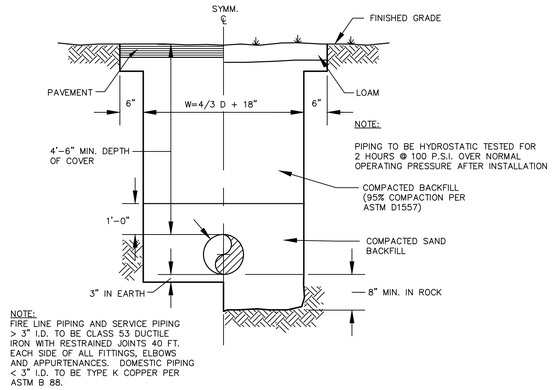

TYPICAL WATER MAIN AND SERVICE TRENCH DETAIL

N.T.S. BLWD-005

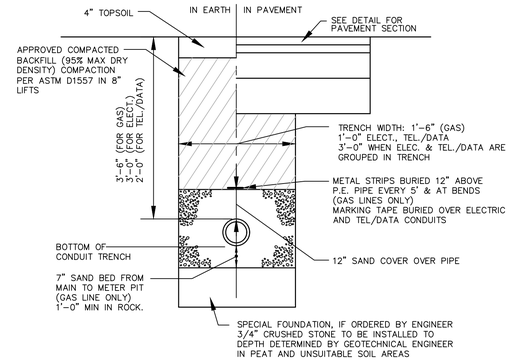

ELECTRICAL, TELEPHONE AND GAS TRENCH DETAIL

N.T.S. BLUD-001

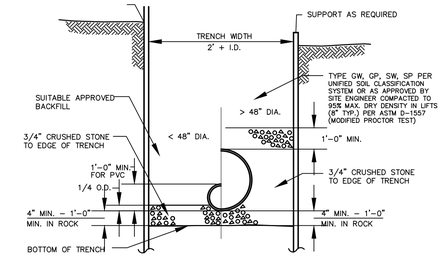

TYPICAL STORM SEWER TRENCH SECTION

N.T.S. BLDD-004

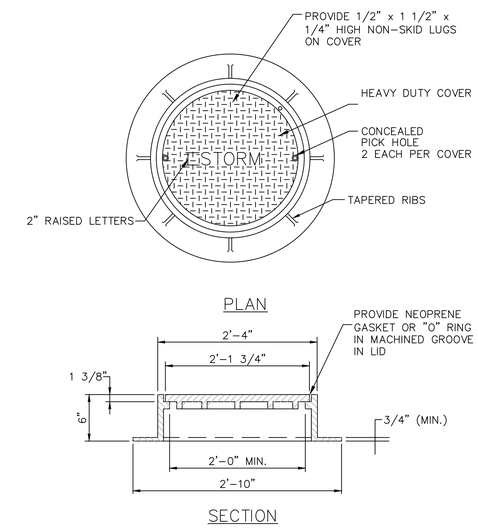

STANDARD MANHOLE FRAME AND COVER

N.T.S. RA_C202_J6

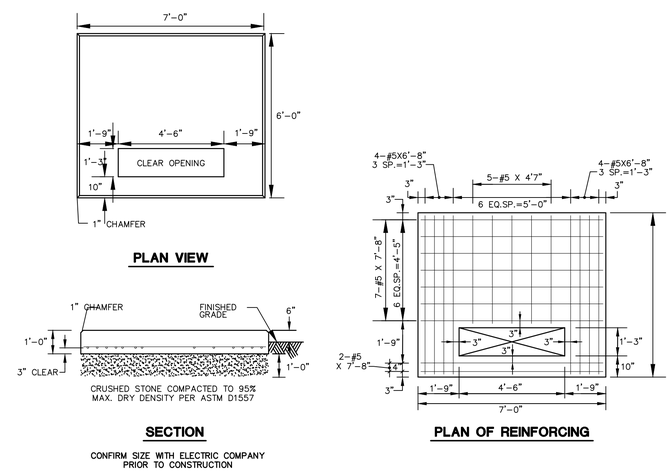

TRANSFORMER PAD

N.T.S. BLLE-001

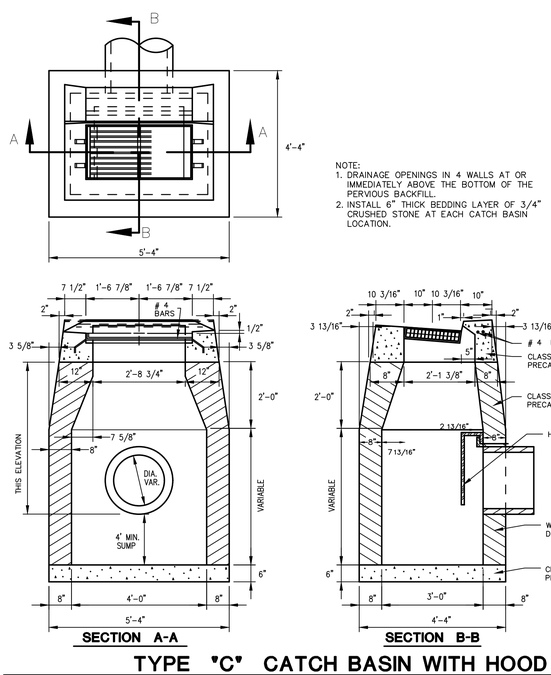

TYPE "C" CATCH BASIN WITH HOOD

N.T.S.

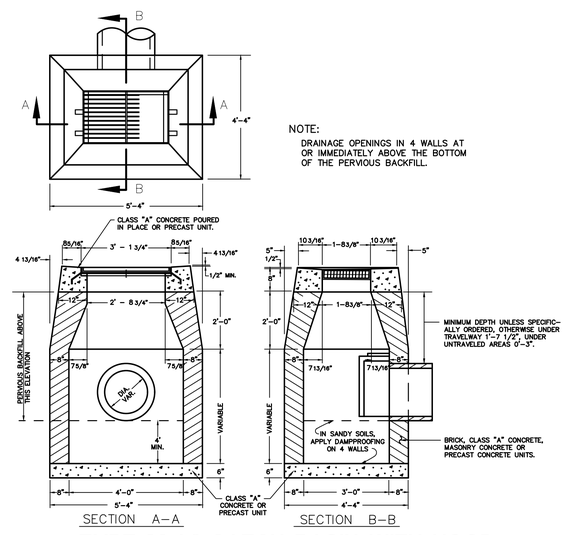

TYPE "C-L" CATCH BASIN WITH HOOD

N.T.S.

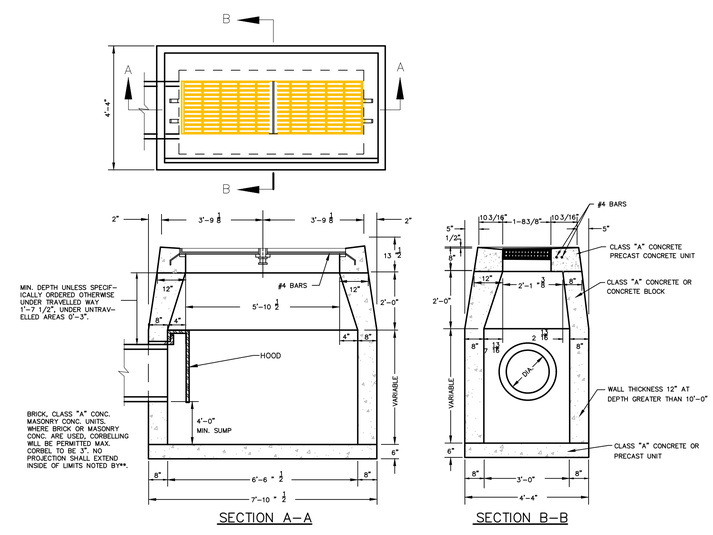

TYPE "CL" DOUBLE CATCH BASIN (TYPE II) WITH HOOD

N.T.S. SW-DD9A

FOR PERMITTING PURPOSES ONLY
NOT RELEASED FOR CONSTRUCTION

Architecture
Engineering
Environmental
Land Surveying
BL Companies
355 Research Parkway
Meriden, CT 06450
(203) 630-1406
(203) 630-2615 Fax

STATE OF CONNECTICUT
MATTHEW T. BRONNER
No. 20584
LICENSED PROFESSIONAL ENGINEER

PROPOSED WAREHOUSE
240 ELLINGTON ROAD
SOUTH WINDSOR, HARTFORD COUNTY, CONNECTICUT

REVISIONS No.	Date	Desc.

Designed	A.J.S.
Drawn	S.E.L.
Reviewed	
Scale	NONE
Project No.	2001166
Date	11/20/2020
CAD File: DN200116601	

Title
DETAILS SHEET

Sheet No.
DN-7

Xref (s): BC200116601

© 2020 BL COMPANIES, INC. THESE DRAWINGS SHALL NOT BE UTILIZED BY ANY PERSON, FIRM OR CORPORATION WITHOUT THE SPECIFIC WRITTEN PERMISSION OF BL COMPANIES.

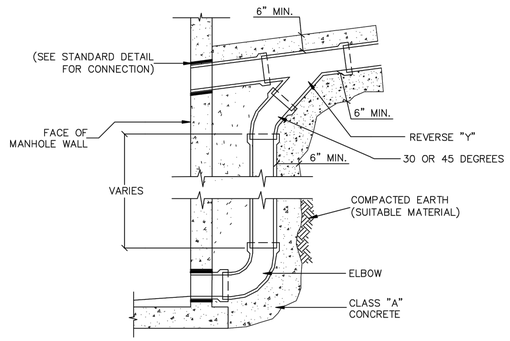

ELEVATION SECTION

NOTE: PRECAST OUTSIDE DROPS MAY BE ACCEPTABLE UPON APPROVAL OF TOWN ENGINEER.

NOT TO SCALE

TOWN OF SOUTH WINDSOR STANDARD DETAIL	MANHOLE OUTSIDE DROP INLET	APPROVED
MARCH, 2005	REVISED:	PUBLIC WORKS DIRECTOR

SD-46 DROPMANHOLE.DWG

1000 GALLON REGULAR GREASE TRAP

TANK DESIGN SPECIFICATIONS CONFORMS TO LATEST: ASTM DESIGNATION C913

NOTES:

1. JOINT SEALANT IS BUTYL RUBBER MASTIC TYPE SEAL THAT CONFORMS TO LATEST AASHTO SPECIFICATION M-198. MEETS FEDERAL SPECIFICATION SS-S-0021(210-A).
2. PIPE INLET AND OUTLET LOCATIONS HAVE POLYLOK II PIPE SEALS, TYPICAL. CUSTOM KNOCKOUTS CAN BE CAST ON REQUEST.
3. WHEN SPECIFIED THE TANK EXTERIOR IS COATED WITH BAY OIL, "EBONY" OR EQUAL.
4. REINFORCING STEEL WELDED WIRE FABRIC CONFORMS TO LATEST ASTM SPECIFICATION A185.
5. REINFORCING STEEL DEFORMED BARS CONFORM TO LATEST ASTM SPECIFICATION A615.
6. CONCRETE COMPRESSIVE STRENGTH- 4000 PSI AT 28 DAYS.
7. METHOD OF MANUFACTURE: WET CAST.
8. BASE SECTION IS MONOLITHIC.

WEIGHT CHART

PRODUCT	APPROX WEIGHT
TANK	14300 LBS.

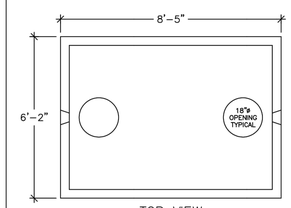

TOP VIEW
(COVERS REMOVED)

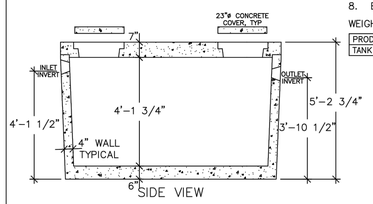

SIDE VIEW

UNITED CONCRETE PRODUCTS INC.
173 CHURCH STREET TEL. 800 234-3119 FAX. (203) 265-4941
YALESVILLE, CT 06492 (203) 269-3119

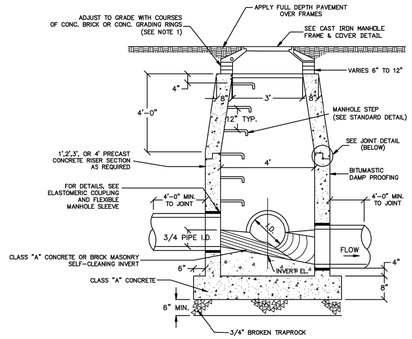

ELEVATION

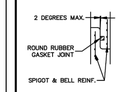

GASKET JOINT

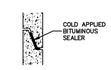

SECTION JOINT

NOTES:
1. TOP STEP TO BE A MAXIMUM OF 24" BELOW TOP OF MANHOLE FRAME & COVER ELEVATION.
2. IF TOTAL DEPTH IS TEN FEET OR GREATER, CERTIFICATION OF HS-20 LOAD BEARING CAPACITY SHALL BE SUBMITTED TO THE TOWN ENGINEER FOR APPROVAL PRIOR TO INSTALLATION.
3. SEE MISCELLANEOUS MANHOLE DETAILS SHEET.
4. SEAL ALL LIFTING HOLES INSIDE AND OUTSIDE OF RISER SECTION.

NOT TO SCALE

TOWN OF SOUTH WINDSOR STANDARD DETAIL	PRECAST CONCRETE SANITARY SEWER MANHOLE	APPROVED
MARCH, 2005	REVISED:	PUBLIC WORKS DIRECTOR

SD-44 MHOLE.DWG

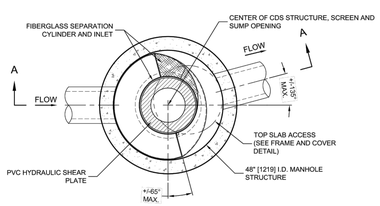

PLAN VIEW B-B
N.T.S.

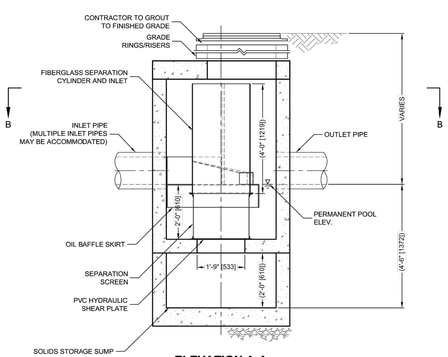

ELEVATION A-A
N.T.S.

CDS

THIS PRODUCT MAY BE COVERED BY ONE OR MORE OF THE FOLLOWING U.S. PATENTS: 5,725,761; 5,725,762; 5,725,763; 5,725,764; 5,725,765; 5,725,766; 5,725,767; 5,725,768; 5,725,769; 5,725,770; 5,725,771; 5,725,772; 5,725,773; 5,725,774; 5,725,775; 5,725,776; 5,725,777; 5,725,778; 5,725,779; 5,725,780; 5,725,781; 5,725,782; 5,725,783; 5,725,784; 5,725,785; 5,725,786; 5,725,787; 5,725,788; 5,725,789; 5,725,790; 5,725,791; 5,725,792; 5,725,793; 5,725,794; 5,725,795; 5,725,796; 5,725,797; 5,725,798; 5,725,799; 5,725,800;

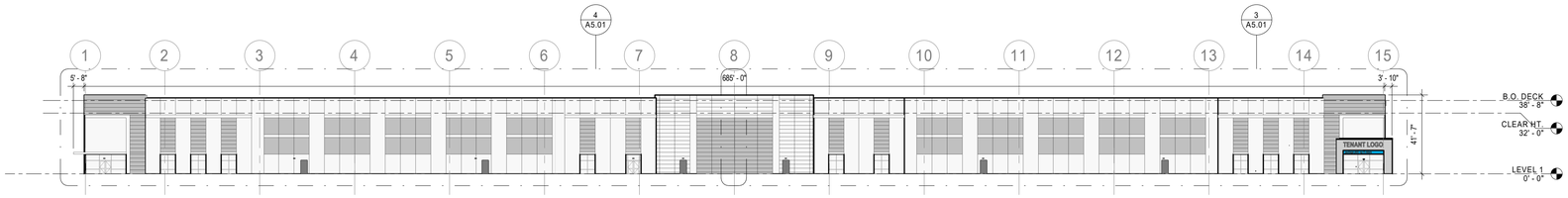

5 OVERALL SOUTH ELEVATION
NOT TO SCALE

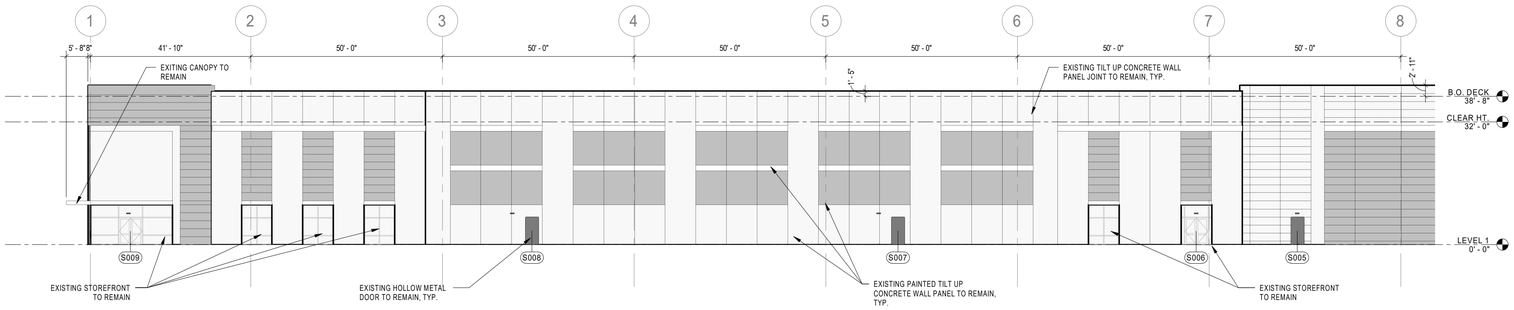

4 PARTIAL SOUTH ELEVATION
NOT TO SCALE

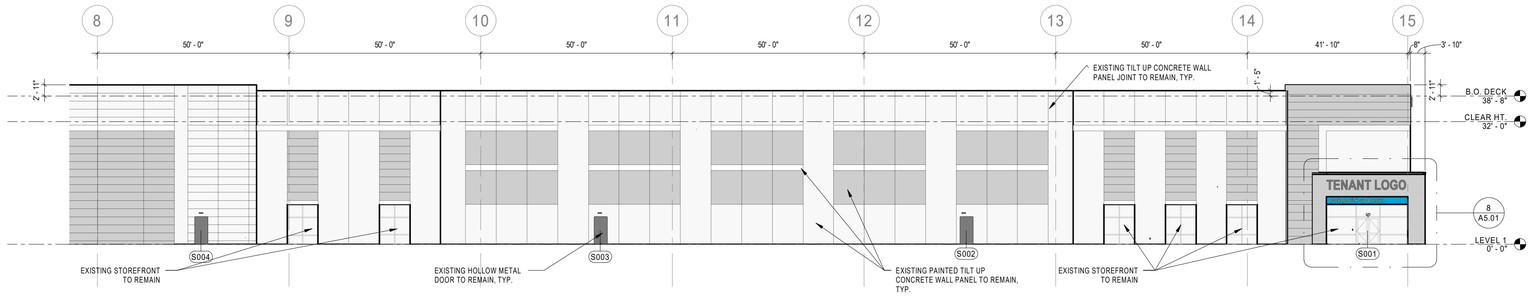

3 PARTIAL SOUTH ELEVATION
NOT TO SCALE

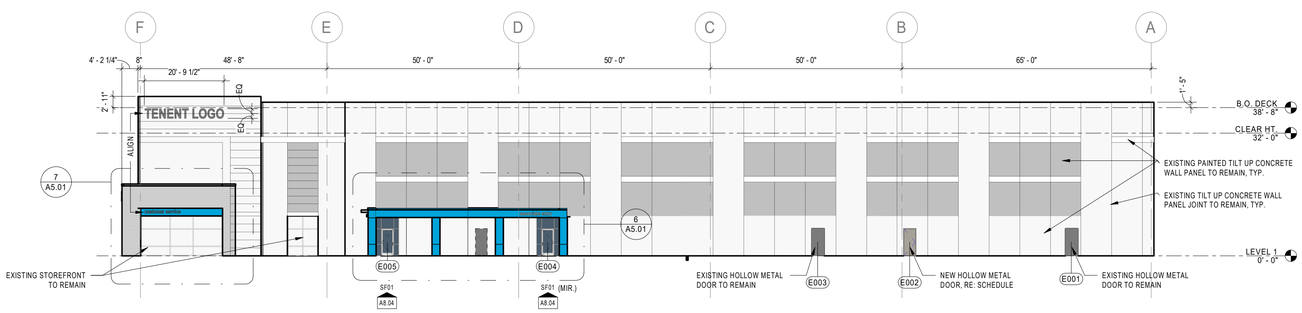

2 EAST ELEVATION
1/16" = 1'-0"

EXTERIOR PAINT COLOR LEGEND

MWP-2
PANTONE
2995C
BLUE

MWP-1
TITANIUM 35

BUILDING ELEMENTS	COLOR
METAL COPING	MP-3: PAC-CLAD 'SLATE GRAY'
METAL DOWNSPOUT AND CONDUCTOR HEADS	MP-3: PAC-CLAD 'SLATE GRAY'
HOLLOW METAL DOORS AND FRAMES	COLOR TO MATCH MP-3
EXTERIOR METAL RAILINGS, STAIRS AND LANDINGS	GALVANIZED - NO PAINT
LOADING CANOPY SOFFIT	MP-2: PAC-CLAD 'BONE WHITE'
ASSOCIATE ENTRY CANOPY/LOADING CANOPY	MP-1: 'TENANT BLUE'
BOLLARDS	SAFETY YELLOW
INTERIOR STAIRS, RAILINGS AND GUARDRAILS	RED / GRAY
ALL EXPOSED METAL STRUCTURE	PT-1

EXTERIOR ELEVATION GENERAL NOTES :

1. HOLD ALL VERTICAL DIMENSIONS.
2. HORIZONTAL DIMENSIONS OF REVEAL (NOT PANELS) DIMENSIONS CAN BE +/- FOR PANEL CONSTRUCTION.
3. ALL WALL INFILL TO RECEIVE PAINT FINISH TO MATCH EXISTING ADJACENT CONSTRUCTION

1 COLOR SCHEME
NOT TO SCALE

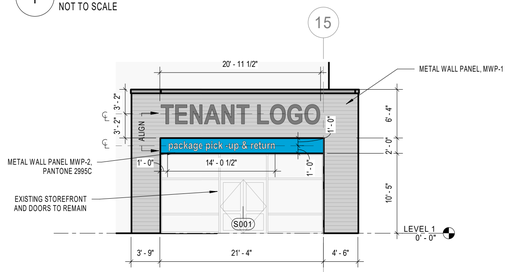

8 HUB ENTRY SOUTH ENLARGED ELEVATION
NOT TO SCALE

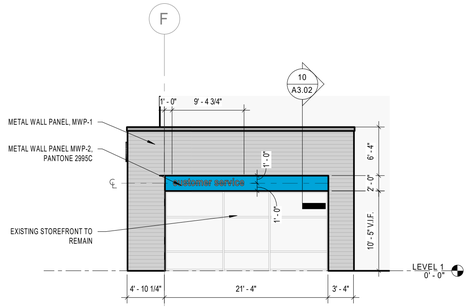

7 HUB ENTRY EAST ENLARGED ELEVATION
NOT TO SCALE

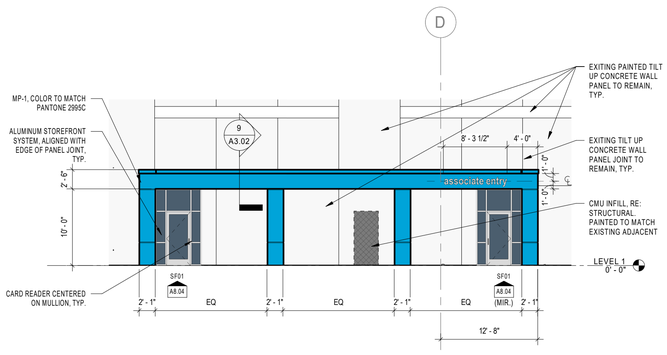

6 ENLARGED ASSOCIATE ENTRY ELEVATION
NOT TO SCALE

GEOGRAPHICAL NORTH

Architecture
Engineering
Environmental
Land Surveying
BL Companies

355 Research Parkway
Meriden, CT 06450
(203) 630-1406
(203) 630-2615 Fax

PROPOSED WAREHOUSE
240 ELLINGTON ROAD
SOUTH WINDSOR, CT 06074

REVISIONS

NO	DATE	DESCRIPTION

Designed:	Designer
Drawn:	Author
Reviewed:	Approver
Scale:	As indicated
Project No.	2001166
Date:	11/13/20

Title:
EXTERIOR ELEVATIONS

Sheet No.
A5.01

11/13/2020 2:17:28 PM C:\Users\Emmauser3\Documents\2001166-DEB2-ARCH_Emmauser3.rvt

© 2019 BL COMPANIES, INC. THESE DRAWINGS SHALL NOT BE UTILIZED BY ANY PERSON, FIRM OR CORPORATION WITHOUT THE SPECIFIC WRITTEN PERMISSION OF BL COMPANIES.

EXTERIOR PAINT COLOR LEGEND

MWP-2
PANTONE
2995C
BLUE

MWP-1
TITANIUM 35

BUILDING ELEMENTS	COLOR
METAL COPING	MP-3; PAC-CLAD 'SLATE GRAY'
METAL DOWNSPOUT AND CONDUCTOR HEADS	MP-3; PAC-CLAD 'SLATE GRAY'
HOLLOW METAL DOORS AND FRAMES	COLOR TO MATCH MP-3
EXTERIOR METAL RAILINGS, STAIRS AND LANDINGS	GALVANIZED - NO PAINT
LOADING CANOPY SOFFIT	MP-2; PAC-CLAD 'BONE WHITE'
ASSOCIATE ENTRY CANOPY/LOADING CANOPY	MP-1; 'TENANT BLUE'
BOLLARDS	SAFETY YELLOW
INTERIOR STAIRS, RAILINGS AND GUARDRAILS	RED / GRAY
ALL EXPOSED METAL STRUCTURE	PT-1

EXTERIOR ELEVATION GENERAL NOTES :

1. HOLD ALL VERTICAL DIMENSIONS.
2. HORIZONTAL DIMENSIONS OF REVEAL (NOT PANELS) DIMENSIONS CAN BE +/- FOR PANEL CONSTRUCTION.
3. ALL WALL INFILL TO RECEIVE PAINT FINISH TO MATCH EXISTING ADJACENT CONSTRUCTION

1 COLOR SCHEME
NOT TO SCALE

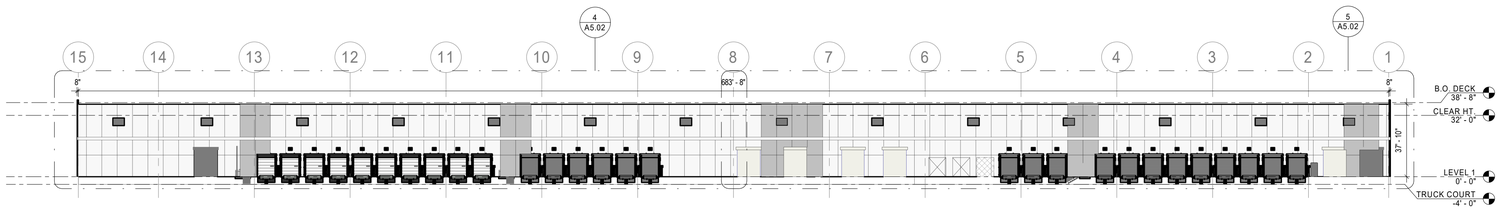

2 OVERALL NORTH ELEVATION
NOT TO SCALE

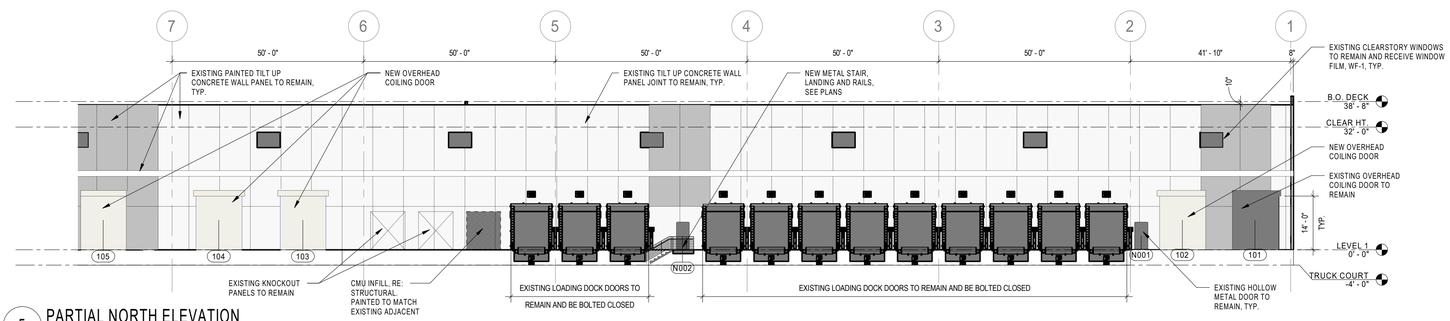

5 PARTIAL NORTH ELEVATION
NOT TO SCALE

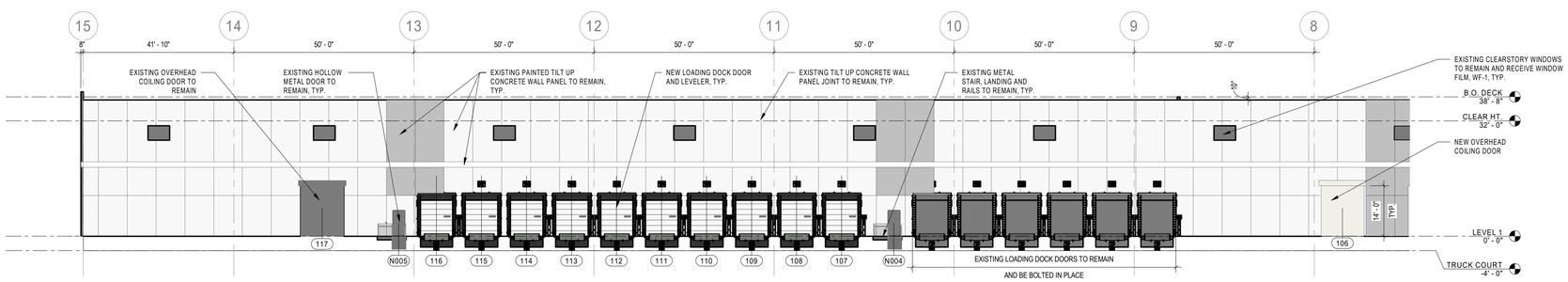

4 PARTIAL NORTH ELEVATION
NOT TO SCALE

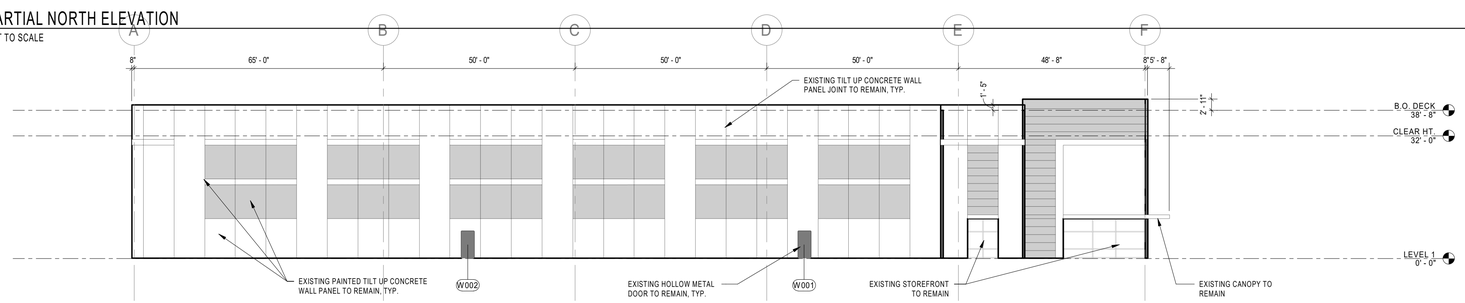

3 WEST ELEVATION
NOT TO SCALE

GEOGRAPHICAL NORTH

Architecture
Engineering
Environmental
Land Surveying
BL Companies

355 Research Parkway
Meriden, CT 06450
(203) 630-1406
(203) 630-2615 Fax

PROPOSED WAREHOUSE
240 ELLINGTON ROAD
SOUTH WINDSOR, CT 06074

REVISIONS

NO	DATE	DESCRIPTION

Designed	Designer
Drawn:	Author
Reviewed:	Approver
Scale:	As indicated
Project No.	2001166
Date:	11/13/20

Title:
EXTERIOR ELEVATIONS

Sheet No.
A5.02

11/13/2020 2:17:31 PM C:\Users\EnmoUser3\Documents\2001166-DEB2-ARCH_Enmouser3.rvt

© 2019 BL COMPANIES, INC. THESE DRAWINGS SHALL NOT BE UTILIZED BY ANY PERSON, FIRM OR CORPORATION WITHOUT THE SPECIFIC WRITTEN PERMISSION OF BL COMPANIES.