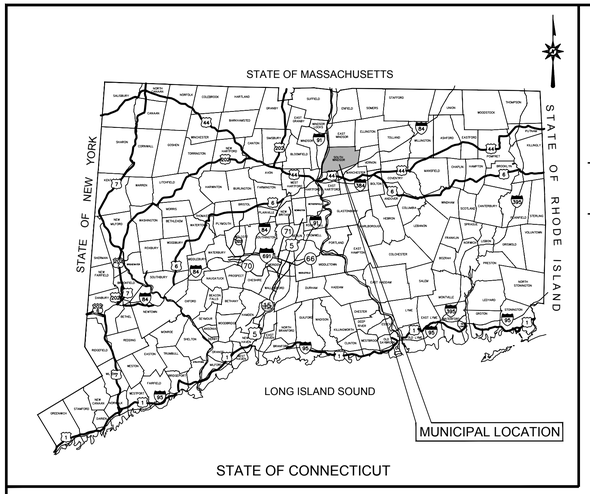

LOCATION MAP

N.T.S.

LAND DEVELOPMENT PLANS
ISSUED FOR PLANNING & ZONING
APPLICATION FOR PROPOSED
EVERGREEN WALK
UNIT 12
151 BUCKLAND ROAD
SOUTH WINDSOR, CONNECTICUT

VICINITY MAP

SCALE: N.T.S.

PREPARED FOR:

EVERGREEN WALK , LLC
501 EVERGREEN WAY, SUITE 503
SOUTH WINDSOR, CT 06074

CONTENTS

	TITLE SHEET
AP-1	APPROVALS SHEET
AL-1	ALTA/NSPS LAND TITLE SURVEY (SHEET 1 OF 2)
AL-1	ALTA/NSPS LAND TITLE SURVEY (SHEET 2 OF 2)
KP-1	KEY PLAN
KP-2	KEY PLAN
OP-1	OVERALL SITE PLAN
GN-1	GENERAL NOTES
SP-1	SITE PLAN
SP-2	SITE PLAN
TT-1 TO TT-2	TRUCK TURNING PLAN - WB-67
TT-3 TO TT-4	TRUCK TURNING PLAN - FIRE
GD-1	GRADING AND DRAINAGE PLAN
GD-2	GRADING AND DRAINAGE PLAN
GD-3	GRADING AND DRAINAGE PLAN
SU-1	SITE UTILITY PLAN
SU-2	SITE UTILITY PLAN
EC-1	SEDIMENT AND EROSION CONTROL PLAN (PHASE 1)
EC-2	SEDIMENT AND EROSION CONTROL PLAN (PHASE 1)
EC-3	SEDIMENT AND EROSION CONTROL PLAN (PHASE 2)
EC-4	SEDIMENT AND EROSION CONTROL PLAN (PHASE 2)
EC-5	SEDIMENT AND EROSION CONTROL NOTES
LL-1	LANDSCAPE PLAN
LL-2	LANDSCAPE PLAN
LL-3	LANDSCAPE DETAILS
DN-1 TO DN-16	SITE DETAILS
	PRELIMINARY DRAFT RETAINING WALL PLANS (BY OTHERS)
	EXHIBIT A RIPARIAN BUFFER BOUNDARY (BY OTHERS)

CAD FILE: CV13C471801
XREF(S): XXXXXXXX

THESE DRAWINGS SHALL NOT BE UTILIZED BY ANY PERSON, FIRM OR CORPORATION WITHOUT THE SPECIFIC WRITTEN PERMISSION OF BL COMPANIES

PREPARED BY:

BL Companies

ARCHITECTURE ENGINEERING ENVIRONMENTAL LAND SURVEYNG

100 CONSTITUTION PLAZA 10TH FLOOR
HARTFORD, CONNECTICUT 06103
(860) 249-2200
(860) 249-2400 Fax

FOR PERMITTING PURPOSES ONLY
NOT RELEASED FOR CONSTRUCTION

DEVELOPER:

EVERGREEN WALK, LLC
501 EVERGREEN WAY, SUITE 503
SOUTH WINDSOR, CT 06074

OWNER:

EVERGREEN WALK, LLC
501 EVERGREEN WAY, SUITE 503
SOUTH WINDSOR, CT 06074

STATE OF CONNECTICUT
MICHELLE M. CARLSON
No.20951
LICENSED
PROFESSIONAL ENGINEER

DATES

ISSUE DATE:	SEPTEMBER 18, 2019	
REVISION DATE:	JANUARY 6, 2020	DRAINAGE MODIFICATION
	AUGUST 14, 2020	PLANNING AND ZONING SUBMISSION
	OCTOBER 20, 2020	RESPONSE TO COMMENTS

Town of South Windsor

1540 SULLIVAN AVENUE • SOUTH WINDSOR, CT 06074
TELEPHONE (860) 644-2511

January 23, 2020

Certified #70171450000132807062

Mr. Matthew Bruton
BL Companies, Inc.
100 Constitution Plaza, 10th Floor
Hartford, CT 06103

RE: Appl. #19-56W, Modification of #15-64W – Evergreen Walk Unit 12

Dear Mr. Bruton:

At the January 15, 2020 regular meeting, the Inland Wetlands Agency/Conservation Commission approved Appl. 19-56W – Evergreen Walk Unit 12, 151 Buckland Rd – IWA/CC application for the modification of permit #15-64W for the alteration of the existing stormwater detention basin, and associated utilities on a portion of land located west of Buckland Rd. Gateway Development (GD) Zone, with the following conditions:

1. The final approved copy of the entire set of plans and this letter reproduced thereon must be submitted to the Planning Department. This must be completed within 65 days of approval prior to any construction activity on the site. Plans submitted to Planning & Zoning Commission shall be considered having met this requirement.
2. The applicant shall indemnify and hold harmless the Town of South Windsor against any liability, which might result from the proposed operation or use.
3. The permit is valid for five years and shall expire on February 17, 2021. It is the landowner(s)/applicant(s) responsibility to track expiration dates and notify the Commission of a renewal request at least 65 days prior to expiration.
4. Bonds shall be collected in the amount of $30,000 for installation and maintenance of erosion and sediment controls; $20,000 for installation and maintenance of stormwater structures; $30,000 to insure proper installation, follow-up inspection and maintenance of mitigation measures.
5. Mitigation shall be monitored for not less than five years and reported to Town staff.
6. Installation of a valve or other device capable of closing the outlet of the detention basin for spill control. This device may be incorporated into the underground system if that is a better location.
7. The maintenance of the spill control device on the detention basin outlet or underground system shall be included in the operation and maintenance plan.
8. Spill event training shall be included in the stormwater pollution prevention plan.
9. An invasive control plan for Unit 9 shall be implemented with review by town staff.
10. This approval shall not go into effect until the Declaration of Restrictions – Riparian Buffer has been properly amended.
11. The Declaration of Restrictions – Riparian Buffer, Appendix A, shall be amended to show the new boundaries as shown on Exhibit A - Riparian Buffer Boundary Evergreen Walk as presented to the commission at the public hearing, dated 1/15/2020 and signed by Barbara Kelly, Chair IWA/CC and Michelle Carlson, BL Companies.
12. The mitigation plan with respect to the elimination of invasive plant species shall include the existing detention basin and the additional land area added to the Riparian Buffer on the east side of Plum Gully Brook.
13. All approvals required must be obtained and submitted prior to any activity on the site.
14. A contact person shall be identified on the plans.

Very truly yours,
INLAND WETLANDS AGENCY/CONSERVATION COMMISSION
Barbara Kelly
Barbara Kelly, Chairperson

cc: Director of Planning, Chief Building Official

FOR PERMITTING PURPOSES ONLY
NOT RELEASED FOR CONSTRUCTION

Architecture
Engineering
Environmental
Land Surveying
BL Companies

100 Constitution Plaza, 10th Floor
Hartford, CT 06103
(860) 249-2200
(860) 249-2400 Fax

STATE OF CONNECTICUT
MICHELLE M. CARLSON
No. 20951
LICENSED
PROFESSIONAL ENGINEER

PROPOSED DEVELOPMENT
EVERGREEN WALK - UNIT 12
151 BUCKLAND ROAD
SOUTH WINDSOR, CONNECTICUT

REVISIONS

No.	Date	Desc.
1	01/04/2020	DRAINAGE MODIFICATION
2	08/14/2020	PLANNING AND ZONING SUBMISSION
3	10/20/2020	RESPONSE TO COMMENTS

Designed
Drawn
Reviewed
Scale
Project No. 13C4718
Date 09/18/2019
CAD File: AP13C471801

Title
APPROVALS SHEET

Sheet No.
AP-1

Xref (s) : : (DETACH Upon Opening) EAT, Revisions : B013C471801

10/29/2020, KRUGER, ERIC,<DRB1>:\13C\13C4718\DWG\AP13C471801.DWG-LAYOUT1

© 2020 BL COMPANIES, INC. THESE DRAWINGS SHALL NOT BE UTILIZED BY ANY PERSON, FIRM OR CORPORATION WITHOUT THE SPECIFIC WRITTEN PERMISSION OF BL COMPANIES.

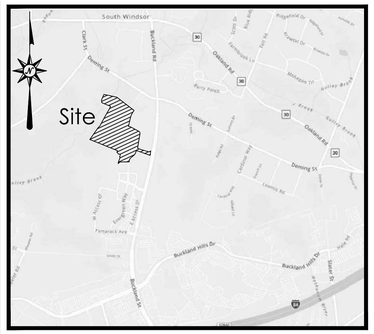

LOCATION MAP

NOT TO SCALE

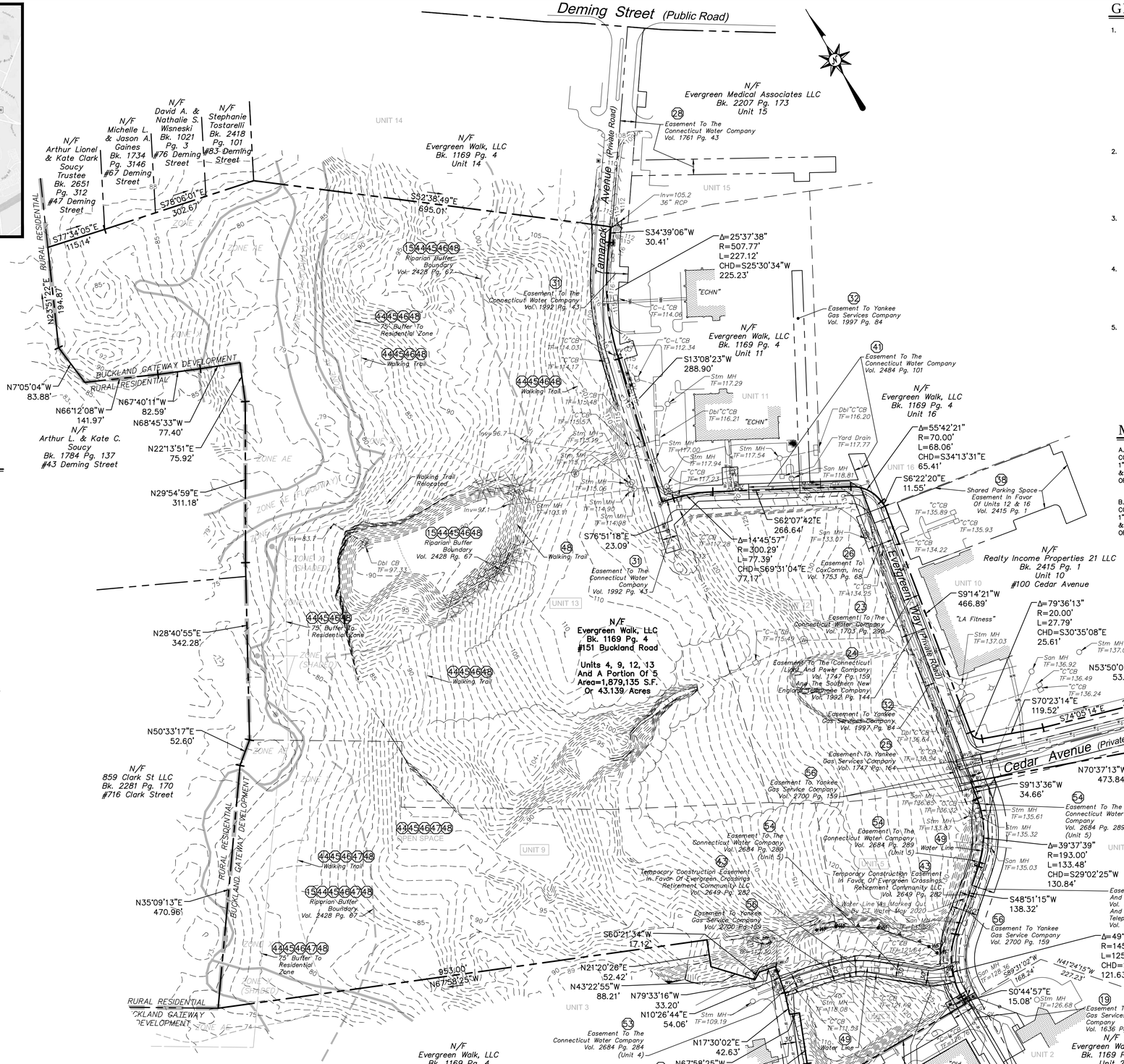

LEGEND

- Property Line
- Interior Unit Line
- Easement Line
- Zoning District Line
- Limit of Wetlands
- Edge of Water
- Treeline
- Brushline
- Major Contour
- Minor Contour
- Retaining Wall
- Underground Electric Line
- Gas Line
- Sanitary Sewer
- Storm Sewer
- Underground Cable Television Line
- Underground Telecommunications Line
- Water Line
- Handhole
- Gas Valve
- Catch Basin
- Double Type II Catch Basin
- Manhole
- Fire Hydrant
- Water Valve
- Monitoring Well
- Deciduous Tree
- Coniferous Tree

GENERAL NOTES

1. A) THIS MAP HAS BEEN PREPARED IN ACCORDANCE WITH THE REGULATIONS OF CONNECTICUT STATE AGENCIES, SECTIONS 20–300b–1 THROUGH 20–300b–20 AND THE "STANDARDS AND SUGGESTED METHODS AND PROCEDURES FOR SURVEYS AND MAPS IN THE STATE OF CONNECTICUT" PREPARED AND ADOPTED BY THE CONNECTICUT ASSOCIATION OF LAND SURVEYORS, INC. AUGUST 29, 2019.

   B) THIS PLAN CONFORMS TO HORIZONTAL ACCURACY CLASS A–2 AND TOPOGRAPHIC ACCURACY CLASS T–2.

   C) BOUNDARY DETERMINATION IS BASED UPON A RESURVEY.

   D) THE TYPE OF SURVEY PERFORMED IS A PROPERTY/TOPOGRAPHIC SURVEY AND IS INTENDED TO DEPICT THE EXISTING CONDITIONS WITH RESPECT TO MONUMENTATION FOUND, STRUCTURES, EASEMENTS, ENCROACHMENTS, VISIBLE UTILITIES, ROADWAYS AND CONTOURS.

2. NORTH ARROW AND BEARINGS REFER TO THE CONNECTICUT STATE PLANE COORDINATE SYSTEM (CT NAD 83 – EPOCH 2011) AND ARE BASED ON GPS OBSERVATIONS PERFORMED BY BL COMPANIES DURING SEPTEMBER 2019 REFERENCED TO THE C.O.R.S. NETWORK BASE STATION "CTNE" LOCATED IN NEWINGTON, CT HAVING THE FOLLOWING PUBLISHED VALUES:
   STATION: CTNE (DH7113)
   COORDINATES (US FT): N:806142.76, E:1009694.66
   ELLIPSOID HEIGHT (US FT): 12.73 (41.751 m)

3. ELEVATIONS REFER TO THE NORTH AMERICAN DATUM OF 1988 (NAVD 88). THE DATUM WAS DETERMINED BY USING (GEOID 12B) AND IS BASED ON GPS OBSERVATIONS PERFORMED BY BL COMPANIES IN SEPTEMBER 2019 AND REFERENCED TO C.O.R.S. BASE STATION "CTNE" LOCATED IN NEWINGTON, CT HAVING THE PUBLISHED COORDINATE AND ELEVATION VALUES AS DESCRIBED IN NOTE 2 ABOVE.

4. PARCEL IS LOCATED IN A FLOOD HAZARD AREA "AE", (BASE FLOOD ELEVATION DETERMINED) AND FLOOD HAZARD AREA "AE" (FLOODWAY AREA); AND FLOOD ZONE "X", (AREAS DETERMINED TO BE OUTSIDE THE 0.2% ANNUAL CHANCE FLOODPLAIN) AND FLOOD ZONE "X" (SHADED), (AREAS OF 0.2% ANNUAL CHANCE FLOOD), FLOOD LINES GRAPHICALLY PLOTTED AS DEPICTED ON F.I.R.M. COMMUNITY PANEL NO. 09003C0383F PANEL 383 OF 675 EFFECTIVE DATE: SEPTEMBER 26, 2008.

5. THE UNDERGROUND UTILITIES DEPICTED HAVE BEEN PLOTTED FROM FIELD SURVEY INFORMATION AND EXISTING DRAWINGS. THE SURVEYOR MAKES NO GUARANTEES THAT THE UNDERGROUND UTILITIES DEPICTED COMPRISE ALL SUCH UTILITIES IN THE AREA, EITHER IN SERVICE OR ABANDONED. THE SURVEYOR FURTHER DOES NOT WARRANT THAT THE UNDERGROUND UTILITIES DEPICTED ARE IN THE EXACT LOCATION INDICATED THOUGH THEY ARE PLOTTED AS ACCURATELY AS POSSIBLE FROM INFORMATION AVAILABLE. THE SURVEYOR HAS NOT PHYSICALLY EXPOSED THE UNDERGROUND UTILITIES. PER CONNECTICUT STATE LAW THE CONTRACTOR SHALL CONFIRM THE LOCATION OF ALL UTILITIES PRIOR TO THE COMMENCEMENT OF EXCAVATION. CALL BEFORE YOU DIG 1–800–922–4455.

MAP REFERENCES

A. "SCHEDULE A–3, PAGE 1 OF 2, SURVEY EVERGREEN WALK PLANNED COMMUNITY, BUCKLAND ROAD, SOUTH WINDSOR, CONNECTICUT", SCALE: 1"=600'±, DATE: 11/06/03, REV. 08/23/18, PROJ. NO.: 00–481A10, BY FUSS & O'NEILL, MANCHESTER, CONNECTICUT AND FILED AS MAP 427 IN THE TOWN OF SOUTH WINDSOR CLERK'S OFFICE.

B. "SCHEDULE A–3, PAGE 2 OF 2, SURVEY EVERGREN WALK PLANNED COMMUNITY, BUCKLAND ROAD, SOUTH WINDSOR, CONNECTICUT", SCALE: 1"=300'±, DATE: 11/06/03, REV. 08/23/18, PROJ. NO.: 00–481A10, BY FUSS & O'NEILL, MANCHESTER, CONNECTICUT AND FILED AS MAP 4278 IN THE TOWN OF SOUTH WINDSOR CLERK'S OFFICE.

SURVEY CERTIFICATION

TO:

THIS IS TO CERTIFY THAT THIS MAP OR PLAT AND THE SURVEY ON WHICH IT IS BASED WERE MADE IN ACCORDANCE WITH THE 2016 MINIMUM STANDARD DETAIL REQUIREMENTS FOR ALTA/NSPS LAND TITLE SURVEYS, JOINTLY ESTABLISHED AND ADOPTED BY ALTA AND NSPS, AND INCLUDES ITEMS 2–6(a),7(a),8–11 AND 13 OF TABLE A THEREOF. THE FIELD WORK WAS COMPLETED ON SEPTEMBER 19, 2019.

DATED: _____ SIGNED: _____
PATRICK J. CORLESS, JR. LS#70015

Architecture
Engineering
Environmental
Land Surveying

BL Companies

355 Research Parkway
Meriden, CT 06450
(203) 630-1406
(203) 630-2615 Fax

LAND OF
EVERGREEN WALK LLC
151 BUCKLAND ROAD
SOUTH WINDSOR, CONNECTICUT

REVISIONS No.	Date	Desc.

Surveyed	A.C.
Drawn	PJC/JS
Reviewed	-
Scale	1"=100'
Project No.	13C4718
Date	10/12/2020
Field Book	531
CAD File:	AL13C471801

Title

ALTA/NSPS
LAND TITLE
SURVEY

Sheet No. 1 Of 2

AL-1

Oct 19, 2020 8:06pm dscorcc G:\70883\13\13C4718\DWG\AL13C471801.dwg
Layout: AL-1 ANSI-D (22.00in)

Xref(s): XY13C471801, XY13C471802

© 2020 BL COMPANIES, INC. THESE DRAWINGS SHALL NOT BE UTILIZED BY ANY PERSON, FIRM OR CORPORATION WITHOUT THE SPECIFIC WRITTEN PERMISSION OF BL COMPANIES.

CHICAGO TITLE INSURANCE COMPANY, SCHEDULE B, SECTION TWO: UNITS 4, 5, 9, 12 & 13

TITLE COMMITMENT REFERENCE NUMBER	RECORDING REFERENCE	DESCRIPTION	STATUS ON PLAT
8	MAP 1368A	DRAINAGE EASEMENT AS SHOWN ON A MAP ENTITLED "TOWN OF SOUTH WINDSOR MAP SHOWING LAND ACQUIRED FROM CATHOLIC CEMETERIES ASSOCIATION OF THE ARCHDIOCESE OF HARTFORD, INC. BY THE STATE OF CONNECTICUT BUCKLAND ROAD SCALE 1"=40' DATE JULY 1991 ROBERT W. GUBAIA TRANSPORTATION CHIEF ENGINEER SHEETS 1–4 OF 4" NOT FILED IN THE SOUTH WINDSOR LAND RECORDS.	PLOTTED
9	V 121 PG 690	DRAINAGE EASEMENT FROM LEVI T. DEWEY TO JAMES SABLE AND JEANNE H. SABLE (UNIT 5)	PLOTTED
10	V 128 PG 114	DRAINAGE EASEMENT FROM LEVI T. DEWEY TO THE TOWN OF SOUTH WINDSOR (UNIT 5)	PLOTTED
11	V 180 PG 241	CERTIFICATE OF CONDEMNATION FROM DOROTHY D. HARRISON, FLORENCE D. LANE, AUREL D. CHAMBERLAIN, WELLS L. DEWEY, MABLE D. WARD, AND ELMER T. DEWEY TO THE STATE OF CONNECTICUT (UNIT 5)	NOT PLOTTABLE
12	V 659 PG 298	CERTIFICATE OF CONDEMNATION FROM BRADFORD L. WRIGHT TO THE STATE OF CONNECTICUT (UNIT 5) – (DOCUMENT NOT PROVIDED)	DOES NOT AFFECT
13	V 694 PG 239	RIGHTS AND EASEMENTS IN FAVOR OF THE STATE OF CONNECTICUT AS MORE PARTICULARLY SET FORTH IN A WARRANTY DEED FROM CATHOLIC CEMETERIES ASSOCIATION OF THE ARCHDIOCESE OF HARTFORD, INC. (UNITS 5, 12 AND 16)	PLOTTED
14	V 1537 PG 115	CERTIFICATE #1533 STATE OF CONNECTICUT TRAFFIC COMMISSION DEPARTMENT OF TRANSPORTATION (ALL UNITS)	NOT PLOTTABLE
15	V 1554 PG 284 V 2428 PG 67	DECLARATION OF RESTRICTIONS – RIPARIAN BUFFER BY EVERGREEN WALK, LLC [1554/284]; AMENDED BY FIRST AMENDMENT TO DELARATION OF RESTRICTIONS – RIPARIAN BUFFER IN FAVOR OF THE TOWN OF SOUTH WINDSOR [2428/67] (UNITS 4, 7C, 8, 9 AND 13)	PLOTTED
16	V 1608 PG 80	WATER MAIN EASEMENT IN FAVOR OF THE CONNECTICUT WATER COMPANY (UNIT 5)	PLOTTED
17	V 1632 PG 249 V 1632 PG 252	TELECOMMUNICATIONS EASEMENT IN FAVOR OF COX BUSINESS SERVICES, LLC [1632/249]; UNANIMOUS CONSENT OF THE MEMBERS OF EVERGREEN WALK, LLC[1632/252] (UNITS 4 AND 5)	PLOTTED
18	V 1636 PG 271 V 1806 PG 144	ELECTRICAL DISTRIBUTION EASEMENT IN FAVOR OF THE CONNECTICUT LIGHT AND POWER COMPANY [1636/271]; AS PARTIALLY ASSIGNED TO THE SOUTHERN NEW ENGLAND TELEPHONE COMPANY DBA SBC CONNECTICUT [1806/144] (UNITS 4 AND 5)	PLOTTED
19	V 1636 PG 274	EASEMENT IN FAVOR OF YANKEE GAS SERVICES COMPANY (UNIT 5)	PLOTTED
20	–	TERMS, CONDITIONS, AGREEMENTS, COVENANTS, RESTRICTIONS, OBLIGATIONS, AND EASEMENTS CONTAINED IN THE DECLARATION OF EVERGREEN WALK PLANNED COMMUNITY AND THE BY-LAWS AND EXHIBITS MADE A PART OF SAID DECLARATION, AND ANY AMENDMENTS OR MODIFICATIONS SUBSEQUENTLY MADE THERETO (ALL UNITS)	NOT PLOTTABLE BLANKET IN NATURE
21	V 1660 PG 314	SLOPE EASEMENT IN FAVOR OF THE TOWN OF SOUTH WINDSOR (UNITS 5, 12 AND 16)	PLOTTED
22	V 1664 PG 20	EMERGENCY ACCESS EASEMENT IN FAVOR OF THE TOWN OF SOUTH WINDSOR ALONG TARAMACK AVENUE TO HEMLOCK AVENUE (UNITS 12 AND 16)	DOES NOT AFFECT
23	V 1703 PG 290	WATER MAIN EASEMENT IN FAVOR OF THE CONNECTICUT WATER COMPANY (UNIT 12)	PLOTTED
24	V 1747 PG 159 V 1992 PG 144	ELECTRIC DISTRIBUTION EASEMENT IN FAVOR OF THE CONNECTICUT LIGHT AND POWER COMPANY [1747/159]; ASSIGNED TO THE SOUTHERN NEW ENGLAND TELEPHONE COMPANY DBA AT&T CONNECTICUT [1992/144] (UNITS 5 AND 12)	PLOTTED
25	V 1747 PG 164	GAS DISTRIBUTION EASEMENT IN FAVOR OF THE YANKEE GAS SERVICES COMPANY (UNITS 5 AND 12)	PLOTTED
26	V 1753 PG 68	TELECOMMUNICATIONS EASEMENT IN FAVOR OF COXCOMM, INC. D/B/A COX COMMUNICATIONS NEW ENGLAND (UNITS 5 AND 12)	PLOTTED
27	V 1760 PG 220 V 1992 PG 144	ELECTRIC DISTRIBUTION EASEMENT IN FAVOR OF THE CONNECTICUT LIGHT AND POWER COMPANY [1760/220]; PARTIALLY ASSIGNED TO THE SOUTHERN NEW ENGLAND TELEPHONE COMPANY DBA AT&T CONNECTICUT [1992/144] (UNITS 14 AND 15)	DOES NOT AFFECT
28	V 1761 PG 43	WATER MAIN EASEMENT IN FAVOR OF THE CONNECTICUT WATER COMPANY (UNITS 14 AND 15)	PLOTTED
29	V 1896 PG 116	WILL SERVICE LETTER FROM COX BUSINESS SERVICES (ALL UNITS)	NOT PLOTTABLE BLANKET IN NATURE
30	V 1988 PG 113 V 2191 PG 296 V 2259 PG 132 V 2451 PG 345	TRAFFIC INVESTIGATION REPORT ISSUED BY THE STATE OF CONNECTICUT DEPARTMENT OF TRANSPORTATION [1988/113]; NOTICE OF APPROVAL OF ONE-YEAR EXTENSION [2191/296]; NOTICE OF APPROVAL OF ONE-YEAR EXTENSION [2259/132]; EXTENDED FOR TWO YEARS AS EVIDENCED BY A NOTICE [2451/345] (ALL UNITS)	NOT PLOTTABLE BLANKET IN NATURE
31	V 1992 PG 43	WATER MAIN EASEMENT IN FAVOR OF THE CONNECTICUT WATER COMPANY (UNITS 12 AND 13)	PLOTTED
32	V 1997 PG 84	GAS DISTRIBUTION EASEMENT IN FAVOR OF YANKEE GAS SERVICES COMPANY (UNITS 5 AND 12)	PLOTTED
33	V 2034 PG 286	TERMS AND PROVISIONS SET FORTH IN AN EASEMENT AGREEMENT BY AND BETWEEN THE TOWN OF SOUTH WINDSOR AND EVERGREEN WALK, LLC (UNIT 2)	DOES NOT AFFECT
34	V 2121 PG 313 V 2191 PG 296 V 2222 PG 343 V 2259 PG 132	TRAFFIC INVESTIGATION REPORT, ONE YEAR EXTENSION OF CERTIFICATE BY THE STATE OF CONNECTICUT DEPARTMENT OF TRANSPORTATION [2121/313]; LETTER OF EXTENSION [2191/296]; TRAFFIC INVESTIGATION REPORT [2222/343]; LETTER OF EXTENSION [2259/132] (ALL UNITS)	NOT PLOTTABLE BLANKET IN NATURE
35	V 2207 PG 173	COVENANTS AS MORE PARTICULARLY SET FORTH IN A SPECIAL WARRANTY DEED FROM EVERGREEN WALK, LLC TO EVERGREEN MEDICAL ASSOCIATES LLC (ALL UNITS) (UNIT 15)	NOT PLOTTABLE
36	V 2207 PG 173	FIRST RIGHT TO PURCHASE AS MORE PARTICULARLY SET FORTH IN A SPECIAL WARRANTY DEED FROM EVERGREEN WALK, LLC TO EVERGREEN MEDICAL ASSOCIATES LLC (ALL UNITS)	NOT PLOTTABLE
37	V 2222 PG 343	TRAFFIC INVESTIGATION REPORT TO THE STATE OF CONNECTICUT DEPARTMENT OF TRANSPORTATION (NO. 132-1110-02) (ALL UNITS)	NOT PLOTTABLE
38	V 2415 PG 1	TERMS AND PROVISIONS OF A PARKING EASEMENT AS RESERVED IN A WARRANTY DEED FROM EVERGREEN WALK, LLC TO REALTY INCOME PROPERTIES 21, LLC (UNITS 12 AND 16)	PLOTTED
39	V 2451 PG 345	TRAFFIC INVESTIGATION REPORT ISSUED BY THE STATE OF CONNECTICUT DEPARTMENT OF TRANSPORTATION (ALL UNITS)	NOT PLOTTABLE
40	V 2462 PG 273	CONDITIONS SET FORTH IN A TRAFFIC REPORT ISSUED BY THE STATE OF CONNECTICUT DEPARTMENT OF TRANSPORTATION (ALL UNITS)	NOT PLOTTABLE
41	V 2484 PG 101	WATER MAIN EASEMENT FROM EVERGREEN WALK MASTER ASSOCIATION, INC. TO THE CONNECTICUT WATER COMPANY (UNIT 12)	PLOTTED
42	V 2640 PG 52	TERMS AND CONDITIONS OF A TRAFFIC REPORT (OSTA NO. 132-1608-01) BY THE STATE OF CONNECTICUT DEPARTMENT OF TRANSPORTATION (ALL UNITS)	NOT PLOTTABLE
43	V 2649 PG 282 V 2700 PG 164	TEMPORARY CONSTRUCTION EASEMENT AGREEMENT BY AND BETWEEN EVERGREEN WALK, LLC AND EVERGREN WALK MASTER ASSOCIATION, INC. AND EVERGREEN CROSSINGS RETIREMENT COMMUNITY LLC [2649/282]; AS AFFECTED BY SUBORDINATION [2700/164] (UNITS 4, 5 AND 12)	PLOTTED
44	MAP 3710	NOTES AS SHOWN ON MAP (ALL UNITS)	PLOTTED
45	MAPS 4001, 4002, 4003	NOTES AND CONDITIONS AS SHOWN ON MAPS (ALL UNITS)	PLOTTED
46	MAPS 4032, 4033, 4034	ALL MATTERS AS SHOWN ON MAPS OF EVERGREEN WALK (ALL UNITS)	PLOTTED
47	MAP 4033	MATTERS AS SHOWN ON MAP OF EVERGREEN WALK (UNIT 5)	PLOTTED
48	MAPS 4183, 4184, 4185, 4238, 4239, 4240	NOTES AND CONDITIONS AS SHOWN ON MAPS (ALL UNITS)	PLOTTED
49	MAP 4249	ALL MATTERS AS SHOWN ON MAP OF EVERGREEN WALK, LLC EROSION AND SEDIMENT CONTROL AND UTILITY PLAN (UNIT 5) (WATER LINE ACROSS UNIT 5 SHOWN)	PLOTTED
52	V 2666 PG 185	SEWER ACCESS AGREEMENT BETWEEN EVERGREEN WALK MASTER ASSOCIATION, INC. AND THE TOWN OF SOUTH WINDSOR (ALL UNITS)	NOT PLOTTABLE BLANKET IN NATURE
53	V 2684 PG 284	WATER MAIN EASEMENT FROM EVERGREEN WALK MASTER ASSOCIATION, INC. AND EVERGREEN WALK, LLC TO THE CONNECTICUT WATER COMPANY (UNIT 4)	PLOTTED
54	V 2684 PG 289	WATER MAIN EASEMENT FROM EVERGREEN WALK MASTER ASSOCIATION, INC. AND EVERGREEN WALK, LLC TO THE CONNECTICUT WATER COMPANY (UNIT 5)	PLOTTED
55	V 2700 PG 155	ELECTRIC DISTRIBUTION EASEMENT TO THE CONNECTICUT LIGHT AND POWER COMPANY DBA EVERSOURCE ENERGY (UNITS 4 AND 5)	PLOTTED
56	V 2700 PG 159	GAS DISTRIBUTION EASEMENT TO YANKEE GAS SERVICES COMPANY DBA EVERSOURCE ENERGY (UNITS 4, 5 AND 12)	PLOTTED

REFERENCE: CHICAGO TITLE INSURANCE COMPANY, COMMITMENT NO. CTIC-19002986, DATE: 8/26/2019

RECORD LEGAL DESCRIPTION; UNITS 4, 5, 9, 12 & 13

ALL THAT CERTAIN REAL PROPERTY KNOWN AS UNITS 4, 5, 9, 12 AND 13 OF EVERGREEN WALK, A PLANNED COMMUNITY CREATED BY THAT CERTAIN DECLARATION OF EVERGREEN WALK PLANNED COMMUNITY DATED NOVEMBER 20, 2003 AND RECORDED IN VOLUME 1555 AT PAGE 1 OF THE SOUTH WINDSOR LAND RECORDS; AMENDED BY VIRTUE OF AN AMENDMENT TO DECLARATION DATED OCTOBER 25, 2004 AND RECORDED IN VOLUME 1660 AT PAGE 259 OF THE SAID LAND RECORDS; FURTHER AMENDED BY VIRTUE OF A SECOND AMENDMENT TO DECLARATION OF EVERGREEN WALK PLANNED COMMUNITY DATED JUNE 22, 2007 AND RECORDED IN VOLUME 1915 AT PAGE 4 OF THE SAID LAND RECORDS; FURTHER AMENDED BY VIRTUE OF AN AFFIDAVIT WITH RESPECT TO SCHEDULE A-3 TO THE SECOND AMENDMENT TO DECLARATION OF EVERGREEN WALK PLANNED COMMUNITY (RECORDED VOLUME 1915, PAGE 4) DATED AUGUST 15, 2007 AND RECORDED IN VOLUME 1927 AT PAGE 249 OF THE SAID LAND RECORDS; AS FURTHER AMENDED BY VIRTUE OF A THIRD AMENDMENT TO DECLARATION OF EVERGREEN WALK PLANNED COMMUNITY DATED APRIL 13, 2009 AND RECORDED IN VOLUME 2035 AT PAGE 159 OF THE SAID LAND RECORDS; AS FURTHER AMENDED BY VIRTUE OF A FOURTH AMENDMENT TO DECLARATION OF EVERGREEN WALK PLANNED COMMUNITY DATED AUGUST 26, 2013 AND RECORDED IN VOLUME 2366 AT PAGE 180 OF THE SAID LAND RECORDS; AS FURTHER AMENDED BY VIRTUE OF A FIFTH AMENDMENT TO DECLARATION OF EVERGREEN WALK PLANNED COMMUNITY DATED AUGUST 26, 2013 AND RECORDED IN VOLUME 2366 AT PAGE 206 OF THE SAID LAND RECORDS; AS FURTHER AMENDED BY VIRTUE OF A SIXTH AMENDMENT TO DECLARATION OF EVERGREEN WALK PLANNED COMMUNITY DATED DECEMBER 17, 2013 AND RECORDED IN VOLUME 2389 AT PAGE 19 OF THE SAID LAND RECORDS; AS FURTHER AMENDED BY VIRTUE OF A SEVENTH AMENDMENT TO DECLARATION OF EVERGREEN WALK PLANNED COMMUNITY DATED MAY 14, 2014 AND RECORDED IN VOLUME 2407 AT PAGE 180 OF THE SAID LAND RECORDS; AS FURTHER AMENDED BY VIRTUE OF AN EIGHTH AMENDMENT TO DECLARATION OF EVERGREEN WALK PLANNED COMMUNITY DATED SEPTEMBER 10, 2014 AND RECORDED IN VOLUME 2428 AT PAGE 59 OF THE SAID LAND RECORDS; AS FURTHER AMENDED BY VIRTUE OF A NINTH AMENDMENT TO DECLARATION OF EVERGREEN WALK PLANNED COMMUNITY DATED FEBRUARY 11, 2015 AND RECORDED IN VOLUME 2449 AT PAGE 37; AS FURTHER AMENDED BY A TENTH AMENDMENT TO DECLARATION OF EVERGREEN WALK PLANNED UNIT COMMUNITY DATED APRIL 24, 2018 AND RECORDED MAY 3, 2018 IN VOLUME 2646 AT PAGE 40 ALL OF THE SOUTH WINDSOR LAND RECORDS; AS FURTHER AMENDED BY ELEVENTH AMENDMENT TO DECLARATION OF EVERGREEN WALK PLANNED COMMUNITY DATED 9/21/2018 AND RECORDED IN VOLUME 2669 AT PAGE 9 OF THE SOUTH WINDSOR LAND RECORDS, AS THE SAME MAY BE FURTHER AMENDED OR SUPPLEMENTED FROM TIME TO TIME.

TOGETHER WITH THE RIGHT USE COMMON ELEMENTS AS SET FORTH IN SAID DECLARATION, AS AMENDED AND AS MAY BE AMENDED OR SUPPLEMENTED FROM TIME TO TIME.

TOGETHER WITH THE EASEMENTS AS MORE PARTICULARLY DESCRIBED IN AN EASEMENT AGREEMENT BY AND BETWEEN THE TOWN OF SOUTH WINDSOR AND EVERGREEN WALK, LLC DATED APRIL 15, 2009 AND RECORDED IN VOLUME 2034 AT PAGE 286 OF THE SOUTH WINDSOR LAND RECORDS. (ALL UNITS).

TOGETHER WITH A PARKING EASEMENT AS RESERVED IN A WARRANTY DEED FROM EVERGREEN WALK, LLC TO REALTY INCOME PROPERTIES 21, LLC DATED JUNE 24, 2014 AND RECORDED IN VOLUME 2415 AT PAGE 1 OF THE SOUTH WINDSOR LAND RECORDS. (UNITS 12 AND 16).

TOGETHER WITH TEMPORARY CONSTRUCTION EASEMENT AGREEMENT BY AND AMONG EVERGREEN WALK LIFESTYLE CENTER, LLC, EVERGREEN WALK MASTER ASSOCIATION, INC. AND EVERGREEN WALK, LLC DATED MAY 22, 2018 AND RECORDED IN VOLUME 2649 AT PAGE 271 OF THE SOUTH WINDSOR LAND RECORDS. (UNIT 4).

Architecture
Engineering
Environmental
Land Surveying

BL Companies

355 Research Parkway
Meriden, CT 06450
(203) 630-1406
(203) 630-2615 Fax

LAND OF
EVERGREEN WALK LLC
151 BUCKLAND ROAD
SOUTH WINDSOR, CONNECTICUT

REVISIONS

No.	Date	Desc.

Surveyed	A.C.
Drawn	PJC/JS
Reviewed	-
Scale	1"=100'
Project No.	13C4718
Date	10/12/2020
Field Book	531
CAD File:	AL13C471801

Title

ALTA/NSPS
LAND TITLE
SURVEY

Sheet No. 2 Of 2

AL-1

Xref(s): XY13C471801; XY13C471802

Oct 15, 2020 8:06pm ateiere G:\JOBS13\13C\13C4718\DWG\AL13C471801.dwg
Layout: AL-1 24X36 2:1C

© 2020 BL COMPANIES, INC. THESE DRAWINGS SHALL NOT BE UTILIZED BY ANY PERSON, FIRM OR CORPORATION WITHOUT THE SPECIFIC WRITTEN PERMISSION OF BL COMPANIES.

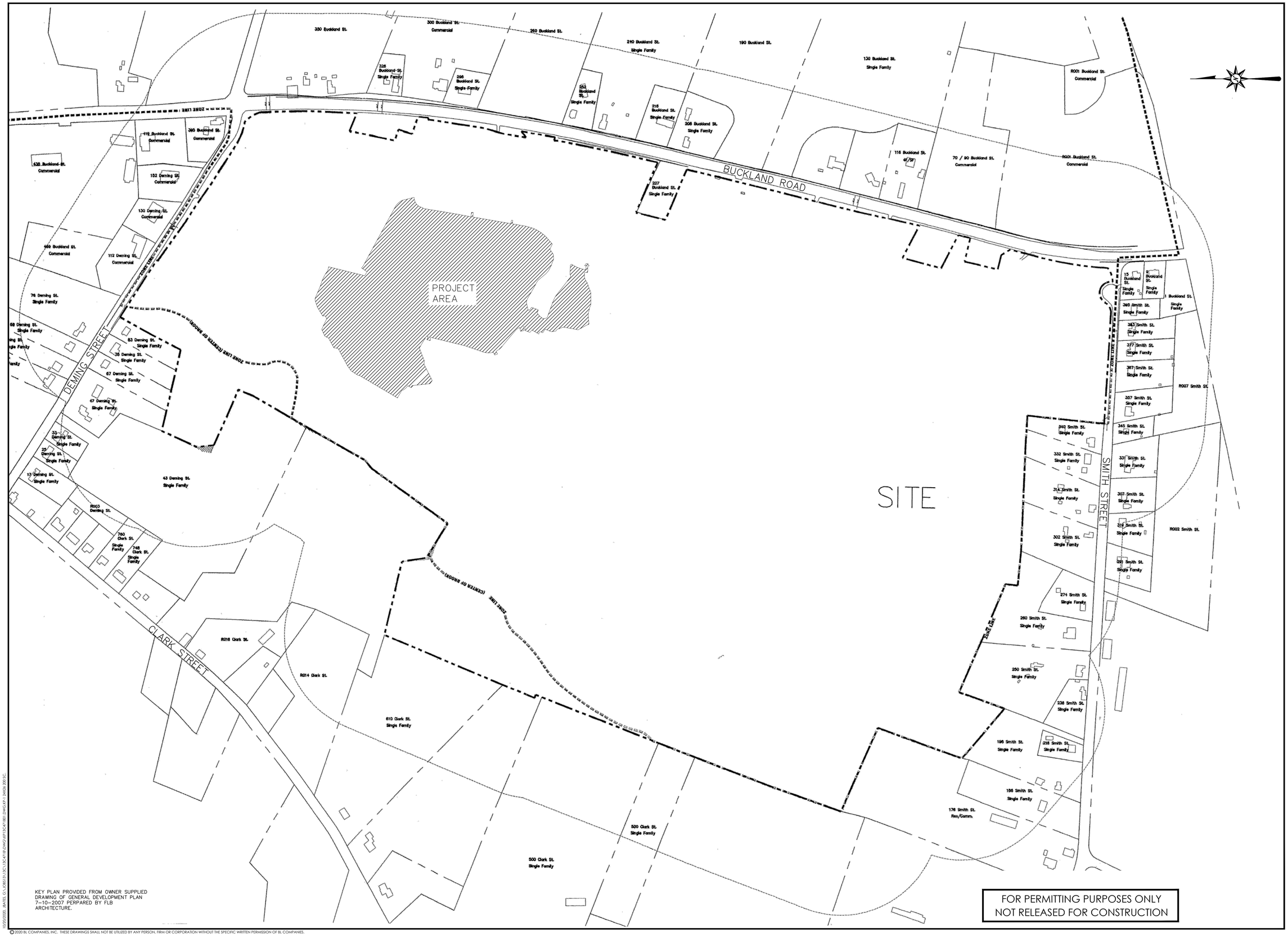

KEY PLAN PROVIDED FROM OWNER SUPPLIED DRAWING OF GENERAL DEVELOPMENT PLAN 7-10-2007 PERPARED BY FLB ARCHITECTURE.

FOR PERMITTING PURPOSES ONLY
NOT RELEASED FOR CONSTRUCTION

10/20/2020 JBATES, C:\-JOBS\13\13C4718\DWG\KP13C471801.DWG\KP1-24X36.PC3

© 2020 BL COMPANIES, INC. THESE DRAWINGS SHALL NOT BE UTILIZED BY ANY PERSON, FIRM OR CORPORATION WITHOUT THE SPECIFIC WRITTEN PERMISSION OF BL COMPANIES.

Architecture
Engineering
Environmental
Land Surveying

BL Companies

100 Constitution Plaza, 10th Floor
Hartford, CT 06103
(860) 249-2200
(860) 249-2400 Fax

STATE OF CONNECTICUT
MICHELLE M. CARLSON
No. 20951
LICENSED
PROFESSIONAL ENGINEER

PROPOSED DEVELOPMENT

EVERGREEN WALK - UNIT 12
151 BUCKLAND ROAD
SOUTH WINDSOR, CONNECTICUT

REVISIONS

No.	Date	Desc.
1	07/02/2020	DRAINAGE MODIFICATION
2	09/14/2020	PLANNING AND ZONING SUBMISSION
3	10/20/2020	RESPOND TO COMMENTS

Designed	J.A.B.
Drawn	S.E.L.
Reviewed	
Scale	1"=200'
Project No.	13C4718
Date	09/18/2019

CAD File: KP13C471801

Title

KEY PLAN

Sheet No.

KP-1

Xref (s) : XC13C471801 : BD13C471801

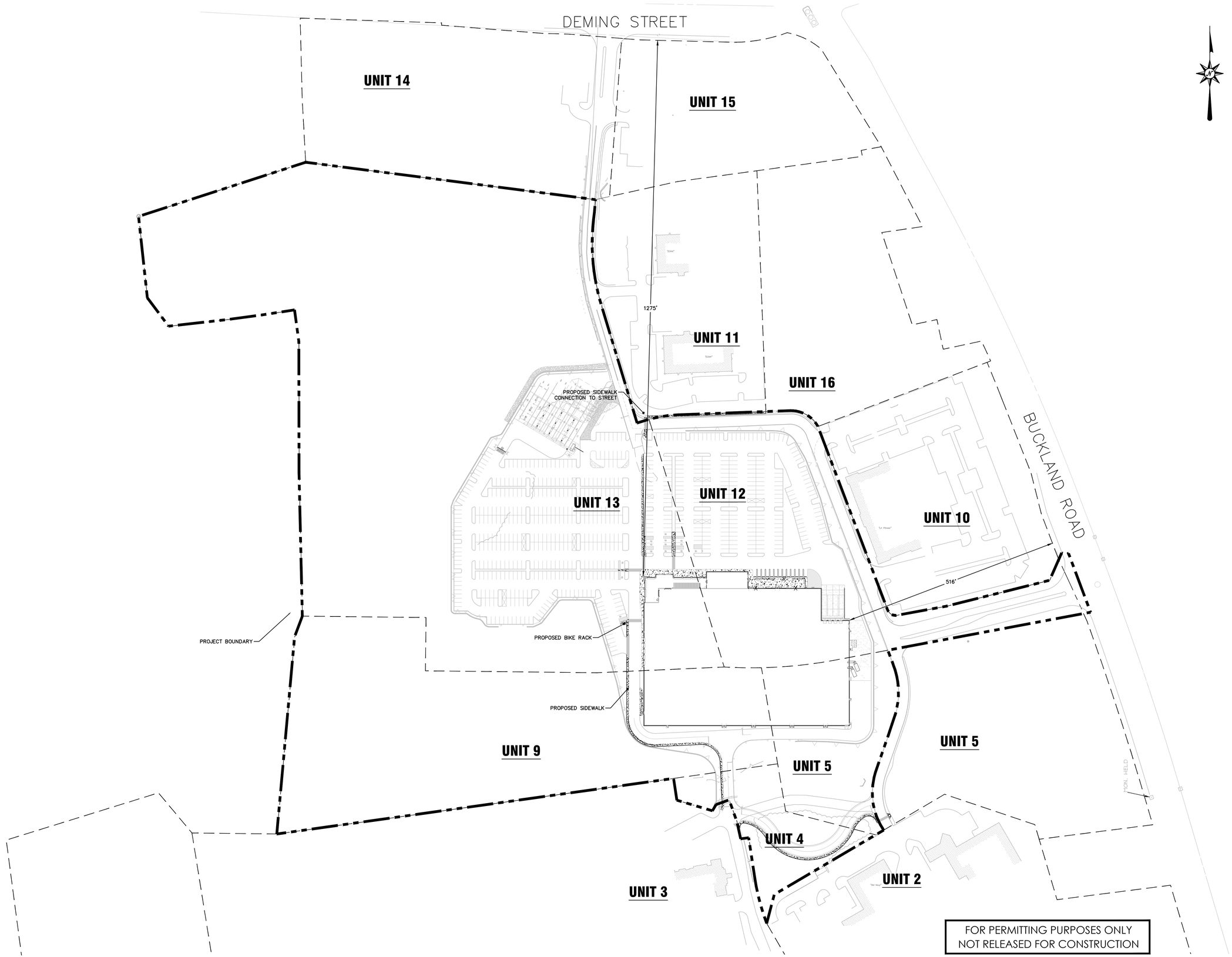

Architecture
Engineering
Environmental
Land Surveying
BL Companies

100 Constitution Plaza, 10th Floor
Hartford, CT 06103
(860) 249-2200
(860) 249-2400 Fax

STATE OF CONNECTICUT
MICHELLE M. CARLSON
No.20951
LICENSED
PROFESSIONAL ENGINEER

PROPOSED DEVELOPMENT

EVERGREEN WALK - UNIT 12
151 BUCKLAND ROAD
SOUTH WINDSOR, CONNECTICUT

REVISIONS

No.	Date	Desc.
1	07/08/2020	DRAINAGE MODIFICATION
2	09/14/2020	PLANNING AND ZONING SUBMISSION
3	10/20/2020	RESPONSE TO COMMENTS

Designed	J.A.B.
Drawn	S.E.L.
Reviewed	
Scale	1"=100'
Project No.	13C4718
Date	09/18/2019
CAD File: KP13C471802	

Title

KEY PLAN

Sheet No.

KP-2

Xref (s): ..XC13C471803 ; XY13C471801 ; 4226500_PR ; B013C471801

10/20/2020, JBAYES, G:\JOBS13\13C\13C4718\DWG\KP13C471802.DWG,KP-1, 24X36,100.1:C

© 2020 BL COMPANIES, INC. THESE DRAWINGS SHALL NOT BE UTILIZED BY ANY PERSON, FIRM OR CORPORATION WITHOUT THE SPECIFIC WRITTEN PERMISSION OF BL COMPANIES.

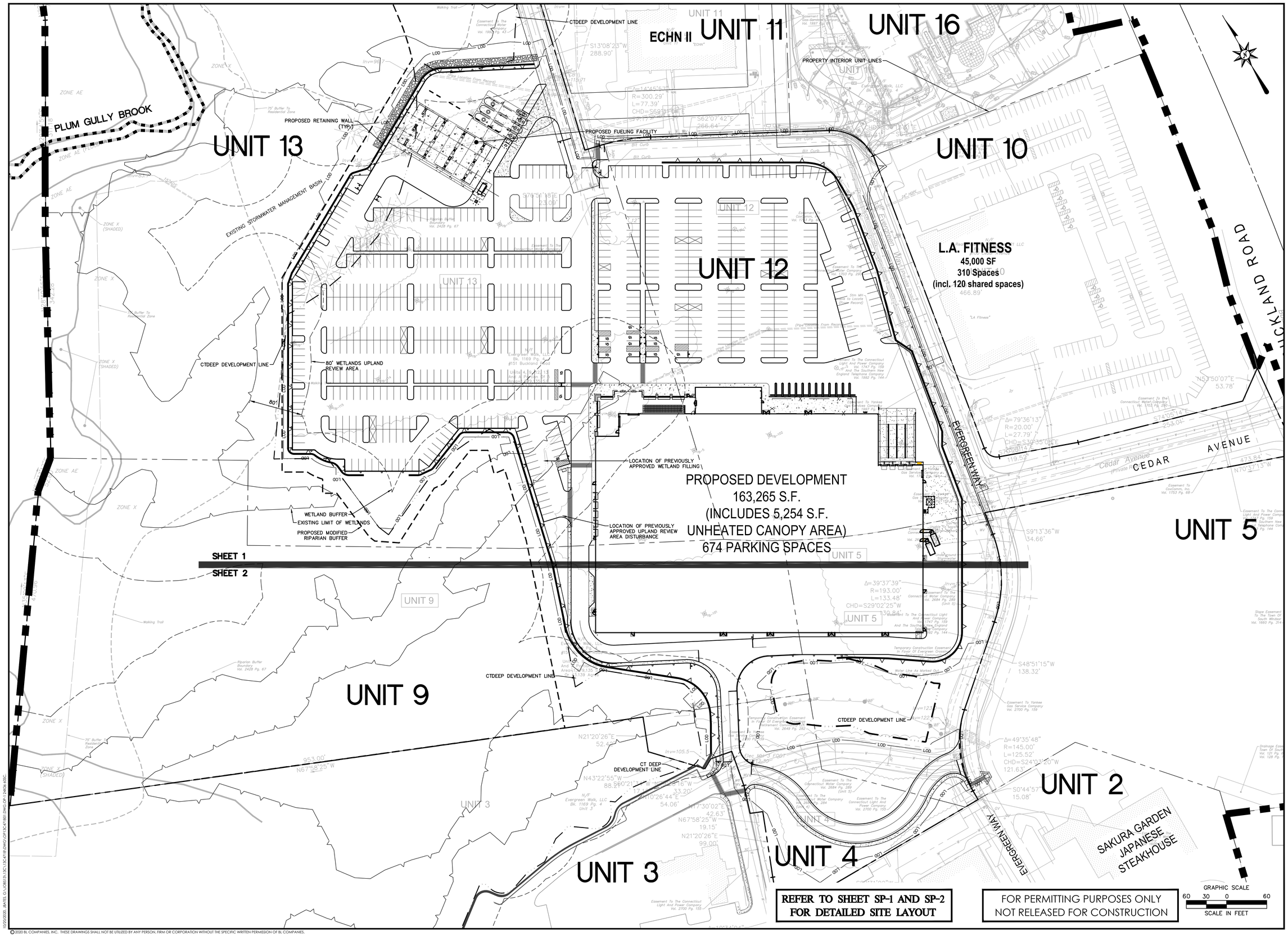

REFER TO SHEET SP-1 AND SP-2 FOR DETAILED SITE LAYOUT

FOR PERMITTING PURPOSES ONLY
NOT RELEASED FOR CONSTRUCTION

© 2020 BL COMPANIES, INC. THESE DRAWINGS SHALL NOT BE UTILIZED BY ANY PERSON, FIRM OR CORPORATION WITHOUT THE SPECIFIC WRITTEN PERMISSION OF BL COMPANIES.

Architecture
Engineering
Environmental
Land Surveying

BL Companies

100 Constitution Plaza, 10th Floor
Hartford, CT 06103
(860) 249-2200
(860) 249-2400 Fax

STATE OF CONNECTICUT
MICHELLE M. CARLSON
No. 20951
LICENSED PROFESSIONAL ENGINEER

PROPOSED DEVELOPMENT

EVERGREEN WALK - UNIT 12
151 BUCKLAND ROAD
SOUTH WINDSOR, CONNECTICUT

REVISIONS

No.	Date	Desc.
1	01/06/2020	DRAINAGE NOTIFICATION
2	09/04/2020	PLANNING AND ZONING SUBMISSION
3	10/20/2020	RESPONSE TO COMMENTS

Designed	J.A.B.
Drawn	S.E.L.
Reviewed	
Scale	1"=60'
Project No.	13C4718
Date	09/18/2019
CAD File:	OP13C471801

Title
OVERALL SITE PLAN

Sheet No.
OP-1

Xref (5): BD13C471801 ; XC13C471801 ; XC13C471802 ; XC13C471803 ; XY13C471801 External ; XO13C471801 Hatchonclose

10/20/2020 , JBATES , G:\JOBS\13\13C\13C4718\DWG\OP13C471801.DWG,OP-1 24X36,6250C

SITE WORK GENERAL NOTES

1. THESE PLANS ARE FOR PERMITTING PURPOSES ONLY AND ARE NOT FOR CONSTRUCTION.
2. ALL CONSTRUCTION SHALL COMPLY WITH THE PROJECT SPECIFICATION MANUAL; TENANT CORPORATION STANDARDS, MUNICIPAL STANDARDS AND SPECIFICATIONS, CONNECTICUT DEPARTMENT OF TRANSPORTATION STANDARDS AND SPECIFICATIONS, 2010 ADA STANDARDS, AND STATE BUILDING CODE IN THE ABOVE REFERENCED INCREASING HIERARCHY. IF SPECIFICATIONS ARE IN CONFLICT, THE MORE STRINGENT SPECIFICATION SHALL APPLY. ALL CONSTRUCTION SHALL BE PERFORMED IN ACCORDANCE WITH ALL APPLICABLE OSHA, FEDERAL, STATE AND LOCAL REGULATIONS.
3. REFER TO OTHER PLANS BY OTHER DISCIPLINES, DETAILS AND PROJECT MANUAL FOR ADDITIONAL INFORMATION. THE CONTRACTOR SHALL VERIFY ALL SITE AND BUILDING CONDITIONS IN THE FIELD AND CONTACT THE CIVIL ENGINEER AND ARCHITECT IF THERE ARE ANY QUESTIONS OR CONFLICTS REGARDING THE CONSTRUCTION DOCUMENTS AND/OR FIELD CONDITIONS, SO THAT APPROPRIATE REVISIONS CAN BE MADE PRIOR TO BIDDING. ANY CONFLICT BETWEEN THE DRAWINGS AND SPECIFICATIONS SHALL BE CONFIRMED WITH THE OWNER'S CONSTRUCTION MANAGER PRIOR TO BIDDING.
4. DO NOT INTERRUPT EXISTING UTILITIES SERVICING FACILITIES OCCUPIED AND USED BY THE OWNER OR OTHERS DURING OCCUPIED HOURS EXCEPT WHEN SUCH INTERRUPTIONS HAVE BEEN AUTHORIZED IN WRITING BY THE OWNER AND THE LOCAL MUNICIPALITIES. INTERRUPTIONS SHALL ONLY OCCUR AFTER ACCEPTABLE TEMPORARY SERVICE HAS BEEN PROVIDED.
5. THE CONTRACTOR SHALL ABIDE BY ALL OSHA, FEDERAL, STATE, AND LOCAL REGULATIONS WHEN OPERATING CRANES, BOOMS, HOISTS, ETC. IN CLOSE PROXIMITY TO OVERHEAD ELECTRIC LINES. IF CONTRACTOR MUST OPERATE EQUIPMENT CLOSE TO ELECTRIC LINES, CONTACT POWER COMPANY TO MAKE ARRANGEMENTS FOR PROPER SAFEGUARDS. ANY UTILITY COMPANY FEES SHALL BE PAID FOR BY THE CONTRACTOR.
6. THE CONTRACTOR SHALL PROVIDE AS-BUILT RECORD DRAWINGS OF ALL CONSTRUCTION (INCLUDING UNDERGROUND UTILITIES AND STORMWATER SYSTEM) TO THE OWNER AT THE END OF CONSTRUCTION.
7. THE ARCHITECT OR ENGINEER IS NOT RESPONSIBLE FOR SITE SAFETY MEASURES TO BE EMPLOYED DURING CONSTRUCTION. THE ARCHITECT AND ENGINEER HAVE NO CONTRACTUAL DUTY TO CONTROL THE SAFEST METHODS OR MEANS OF THE WORK, JOB SITE RESPONSIBILITIES, SUPERVISION OR TO SUPERVISE SAFETY AND DOES NOT VOLUNTARILY ASSUME ANY SUCH DUTY OR RESPONSIBILITY.
8. THE CONTRACTOR SHALL COMPLY WITH CFR 29 PART 1926 FOR EXCAVATION, TRENCHING, AND TRENCH PROTECTION REQUIREMENTS.
9. INFORMATION ON EXISTING UTILITIES AND STORM DRAINAGE SYSTEMS HAS BEEN COMPILED FROM AVAILABLE INFORMATION INCLUDING UTILITY COMPANY AND MUNICIPAL OR STATE RECORD MAPS AND/OR FIELD SURVEY AND IS NOT GUARANTEED CORRECT OR COMPLETE. UTILITIES AND STORM DRAINAGE SYSTEMS ARE SHOWN TO ALERT THE CONTRACTOR TO THEIR PRESENCE AND THE CONTRACTOR IS SOLELY RESPONSIBLE FOR DETERMINING ACTUAL LOCATIONS AND ELEVATIONS OF ALL UNDERGROUND AND OVERHEAD UTILITIES AND STORM DRAINAGE SYSTEMS INCLUDING SERVICES. PRIOR TO DEMOLITION OR CONSTRUCTION, THE CONTRACTOR SHALL CONTACT CT CALL BEFORE YOU DIG (CBYD) 72 HOURS BEFORE COMMENCEMENT OF WORK AT (800) 922-4455 OR AT 811 AND VERIFY ALL UTILITY AND STORM DRAINAGE SYSTEM LOCATIONS. THE CONTRACTOR SHALL EMPLOY THE USE OF A UTILITY LOCATING COMPANY TO PROVIDE SUBSURFACE UTILITY ENGINEERING CONSISTING OF DESIGNATING UTILITIES AND STORM PIPING ON PRIVATE PROPERTY WITHIN THE CONTRACT LIMIT AND CONSISTING OF DESIGNATING AND LOCATING WHERE PROPOSED UTILITIES AND STORM PIPING CROSS EXISTING UTILITIES AND STORM PIPING WITHIN THE CONTRACT LIMITS.
10. DO NOT SCALE DRAWINGS. DIMENSIONS GOVERN OVER SCALED DIMENSIONS.
11. IF PLANS AND OR SPECIFICATIONS ARE IN CONFLICT, THE MOST COSTLY SHALL APPLY.
12. ALL CONTRACTORS AND SUBCONTRACTORS SHALL OBTAIN COMPLETE DRAWING PLAN SETS FOR BIDDING AND CONSTRUCTION. PLAN SETS OR PLAN SET ELECTRONIC POSTINGS SHALL NOT BE DISASSEMBLED INTO PARTIAL PLAN SETS FOR USE BY CONTRACTORS AND SUBCONTRACTORS OF INDIVIDUAL TRADES. IT SHALL BE THE CONTRACTOR'S AND SUBCONTRACTOR'S RESPONSIBILITY TO OBTAIN COMPLETE PLAN SETS OR COMPLETE PLAN SET ELECTRONIC POSTINGS FOR USE IN BIDDING AND CONSTRUCTION.
13. ALL NOTES AND DIMENSIONS DESIGNATED "TYPICAL" APPLY TO ALL LIKE OR SIMILAR CONDITIONS THROUGHOUT THE PROJECT.
14. CONTRACTOR(S) TO TAKE AND VERIFY ALL DIMENSIONS AND CONDITIONS OF THE WORK AND BE RESPONSIBLE FOR COORDINATION OF SAME. FIELD VERIFY ALL EXISTING CONDITIONS PRIOR TO START OF WORK.
15. BL COMPANIES WILL PREPARE FINAL CONSTRUCTION DOCUMENTS SUITABLE FOR BIDDING AND CONSTRUCTION. PROGRESS OR PERMITTING SETS OF THESE DOCUMENTS ARE NOT SUITABLE FOR THOSE PURPOSES. IF CLIENT ELECTS TO SOLICIT BIDS OR ENTER INTO CONSTRUCTION CONTRACTS UTILIZING CONSTRUCTION DOCUMENTS THAT ARE NOT YET FINAL, CONSULTANT SHALL NOT BE RESPONSIBLE FOR ANY COSTS OR DELAY ARISING AS A RESULT.
16. NO CONSTRUCTION OR DEMOLITION SHALL BEGIN UNTIL APPROVAL OF THE FINAL PLANS IS GRANTED BY ALL GOVERNING AND REGULATORY AGENCIES.
17. THE OWNER IS RESPONSIBLE FOR OBTAINING ALL NECESSARY ZONING PERMITS REQUIRED BY GOVERNMENT AGENCIES PRIOR TO CONSTRUCTION. THE CONTRACTOR SHALL CONTACT AND OBTAIN FROM MUNICIPAL SOURCES ALL CONSTRUCTION PERMITS, INCLUDING ANY STATE DOT PERMITS, SEWER AND WATER CONNECTION PERMITS, AND ROADWAY CONSTRUCTION PERMITS. THE CONTRACTOR SHALL POST ALL BONDS, PAY ALL FEES, PROVIDE PROOF OF INSURANCE AND PROVIDE TRAFFIC CONTROL NECESSARY FOR THIS WORK.
18. THE CONTRACTOR SHALL SUBMIT SHOP DRAWINGS OF ALL PRODUCTS AND MATERIALS PER PLANS AND SPECIFICATIONS TO THE OWNER AND CIVIL ENGINEER FOR REVIEW AND APPROVAL PRIOR TO FABRICATION OR DELIVERY TO THE SITE. ALLOW A MINIMUM OF 14 WORKING DAYS FOR REVIEW.
19. THE CONTRACTOR SHALL FOLLOW THE SEQUENCE OF CONSTRUCTION NOTES PROVIDED ON THE SEDIMENT AND EROSION CONTROL PLAN.
20. THE CONTRACTOR SHALL REFERENCE ARCHITECTURAL PLANS FOR EXACT DIMENSIONS AND CONSTRUCTION DETAILS OF BUILDING, FUELING AREA, AND THE RAISED CONCRETE SIDEWALKS, LANDINGS, RAMPS, AND STAIRS.
21. SHOULD ANY UNCHARTED OR INCORRECTLY CHARTED, EXISTING PIPING OR OTHER UTILITY BE UNCOVERED DURING EXCAVATION, CONSULT THE CIVIL ENGINEER IMMEDIATELY FOR DIRECTIONS BEFORE PROCEEDING FURTHER WITH WORK IN THIS AREA.
22. ALL SITE DIMENSIONS ARE REFERENCED TO THE FACE OF CURBS OR EDGE OF PAVING AS APPLICABLE UNLESS OTHERWISE NOTED. ALL BUILDING DIMENSIONS ARE REFERENCED TO THE OUTSIDE FACE OF THE STRUCTURE.
23. THE CONTRACTOR SHALL PROVIDE AND MAINTAIN TRAFFIC DEVICES FOR PROTECTION OF VEHICLES AND PEDESTRIANS CONSISTING OF DRUMS, BARRIERS, SIGNS, LIGHTS, FENCES, TEMPORARY WALKWAYS, TRAFFIC CONTROLLERS AND UNIFORMED TRAFFIC OFFICERS AS REQUIRED OR AS ORDERED BY THE ENGINEER OR AS REQUIRED BY THE LOCAL GOVERNING AUTHORITIES OR AS REQUIRED BY PERMIT STIPULATIONS OR AS REQUIRED BY THE OWNER. CONTRACTOR SHALL MAINTAIN ALL TRAFFIC LANES AND PEDESTRIAN WALKWAYS FOR USE AT ALL TIMES UNLESS WRITTEN APPROVAL FROM THE APPROPRIATE GOVERNING AGENCY IS GRANTED.
24. TRAFFIC CONTROL SIGNAGE SHALL CONFORM TO THE STATE DOT STANDARD DETAIL SHEETS AND THE MANUAL OF UNIFORM TRAFFIC CONTROL DEVICES. SIGNS SHALL BE INSTALLED PLUMB WITH THE EDGE OF THE SIGN 2' OFF THE FACE OF THE CURB, AND WITH 7' VERTICAL CLEARANCE UNLESS OTHERWISE DETAILED OR NOTED.
25. REFER TO DETAIL SHEETS FOR PAVEMENT, CURBING, AND SIDEWALK INFORMATION.
26. THE CONTRACT LIMIT IS THE PROPERTY LINE UNLESS OTHERWISE SPECIFIED OR SHOWN ON THE CONTRACT DRAWINGS.
27. THE CONTRACTOR SHALL SUBMIT A SHOP DRAWING OF THE PAVEMENT MARKING PAINT MIXTURE PRIOR TO STRIPING.
28. PAVEMENT MARKING KEY:

    4" SYDL 4' SOLID YELLOW DOUBLE LINE
    4" SYL 4" SOLID YELLOW LINE
    4" SWL 4" SOLID WHITE LINE
    12" SWSB 12" SOLID WHITE STOP BAR
    4" BWL 4" BROKEN WHITE LINE 10' STRIPE 30' SPACE
29. PARKING SPACES SHALL BE STRIPED WITH 4" SWL; HATCHED AREA SHALL BE STRIPED WITH 4" SWL AT A 45° ANGLE, 2' ON CENTER. HATCHING, SYMBOLS, AND STRIPING FOR HANDICAPPED SPACES SHALL BE PAINTED BLUE. OTHER MARKINGS SHALL BE PAINTED WHITE OR AS NOTED.
30. ALL PARKING SPACES AND HATCHED AREAS SHALL HAVE TWO COATS OF PAVEMENT MARKINGS APPLIED TO STRIPING.
31. PAVEMENT MARKINGS SHALL BE HOT APPLIED TYPE IN ACCORDANCE WITH STATE DOT SPECIFICATIONS, UNLESS WHERE EPOXY RESIN PAVEMENT MARKINGS ARE INDICATED.
32. THE CONTRACTOR SHALL RESTORE ANY UTILITY STRUCTURE, DRAINAGE STRUCTURE, PIPE, UTILITY, PAVEMENT, CURBS, SIDEWALKS, LANDSCAPED AREAS, SWALE, PAVEMENT MARKINGS, OR SIGNAGE DISTURBED DURING DEMOLITION AND/OR CONSTRUCTION TO THEIR ORIGINAL CONDITION OR BETTER, AS APPROVED BY THE CIVIL ENGINEER, AND TO THE SATISFACTION OF THE OWNER AND MUNICIPALITY.
33. EXISTING BOUNDARY AND TOPOGRAPHY IS BASED ON VARIOUS MAPPING PREPARED FOR THE PROPERTY INCLUDING AS-BUILT MAPS.
34. ALTERNATIVE METHODS AND PRODUCTS OTHER THAN THOSE SPECIFIED MAY BE USED IF REVIEWED AND APPROVED BY THE OWNER, CIVIL ENGINEER, AND APPROPRIATE REGULATORY AGENCY PRIOR TO INSTALLATION DURING THE BIDDING PROCESS.
35. AN EROSION CONTROL BOND IS REQUIRED TO BE POSTED BY THE CONTRACTOR BEFORE THE START OF ANY ACTIVITY ON OR OFF SITE. THE AMOUNT OF THE EROSION CONTROL BOND WILL BE DETERMINED BY THE AUTHORITY HAVING JURISDICTION.
36. THE SITE IS CURRENTLY SERVICED BY PUBLIC WATER.
37. THE PROJECT PARCEL IS LOCATED PARTLY WITHIN A FEMA DESIGNATED FLOOD HAZARD AREA.
38. THERE ARE WETLANDS LOCATED ON THE SITE AS INDICATED BY WALDO & ASSOCIATES LLC MAPPING.
39. FIRE LANES SHALL BE ESTABLISHED AND PROPERLY DESIGNATED IN ACCORDANCE WITH THE REQUIREMENTS OF THE FIRE DISTRICT FIRE MARSHAL.
40. THE CONTRACTOR SHALL REMOVE CONFLICTING PAVEMENT MARKINGS IN THE ROADWAY BY METHOD APPROVED BY THE AUTHORITY HAVING JURISDICTION OR DOT AS APPLICABLE FOR THE LOCATION OF THE WORK.
41. ALL ADA DESIGNATED PARKING STALLS, ACCESS AISLES AND PEDESTRIAN WALKWAYS SHALL CONFORM TO THE CURRENT VERSION OF THE AMERICANS WITH DISABILITIES ACT STANDARDS FOR ACCESSIBLE DESIGN AND ANSI STANDARDS AND AS MAY BE SUPERCEDED BY THE STATE BUILDING CODE.
42. CONSTRUCTION OCCURRING ON THIS SITE SHALL COMPLY WITH NFPA 241 STANDARD FOR SAFEGUARDING CONSTRUCTION, ALTERATION AND DEMOLITION OPERATIONS, AND CHAPTER 16 OF NFPA 1 UNIFORM FIRE CODE.
43. CONTRACTOR SHALL SECURE ANY PERMITS, PAY ALL FEES AND PERFORM CLEARING AND GRUBBING AND DEBRIS REMOVAL PRIOR TO COMMENCEMENT OF GRADING OPERATIONS.
44. SEDIMENT AND EROSION CONTROLS AS SHOWN ON THE SEDIMENT AND EROSION CONTROL PLAN AND/OR DEMOLITION PLAN SHALL BE INSTALLED BY THE DEMOLITION CONTRACTOR PRIOR TO START OF DEMOLITION AND CLEARING AND GRUBBING OPERATIONS.
45. REMOVE AND DISPOSE OF ANY SIDEWALKS, FENCES, STAIRS, WALLS, DEBRIS AND RUBBISH REQUIRING REMOVAL FROM THE WORK AREA IN AN APPROVED OFF SITE LANDFILL, BY AN APPROVED HAULER. HAULER SHALL COMPLY WITH ALL REGULATORY REQUIREMENTS.
46. THE CONTRACTOR SHALL SECURE ALL PERMITS FOR HIS DEMOLITION AND DISPOSAL OF HIS DEMOLITION MATERIAL TO BE REMOVED FROM THE SITE. THE CONTRACTOR SHALL POST BONDS AND PAY PERMIT FEES AS REQUIRED.
47. ASBESTOS OR HAZARDOUS MATERIAL, IF FOUND ON SITE, SHALL BE REMOVED BY A LICENSED HAZARDOUS MATERIAL ABATEMENT CONTRACTOR.
48. THE CONTRACTOR SHALL PREPARE ALL MANIFEST DOCUMENTS AS REQUIRED PRIOR TO COMMENCEMENT OF DEMOLITION.H
49. THE CONTRACTOR SHALL PROTECT ALL IRON PINS, MONUMENTS AND PROPERTY CORNERS DURING DEMOLITION AND CONSTRUCTION ACTIVITIES. ANY CONTRACTOR DISTURBED PINS, MONUMENTS, AND OR PROPERTY CORNERS, ETC. SHALL BE RESET BY A LICENSED LAND SURVEYOR AT THE EXPENSE OF THE CONTRACTOR.
50. THE CONTRACTOR SHALL PUMP OUT BUILDING FUEL AND WASTE OIL TANKS (IF ANY ARE ENCOUNTERED) AND REMOVE FUEL TO AN APPROVED DISPOSAL AREA BY A LICENSED WASTE OIL HANDLING CONTRACTOR IN STRICT ACCORDANCE WITH STATE REQUIREMENTS.
51. IF IMPACTED OR CONTAMINATED SOIL IS ENCOUNTERED BY THE CONTRACTOR, THE CONTRACTOR SHALL SUSPEND EXCAVATION WORK OF IMPACTED SOIL AND NOTIFY THE OWNER AND/OR OWNER'S ENVIRONMENTAL CONSULTANT PRIOR TO PROCEEDING WITH FURTHER WORK IN THE IMPACTED SOIL LOCATION UNTIL FURTHER INSTRUCTED BY THE OWNER AND/OR OWNER'S ENVIRONMENTAL CONSULTANT.
52. BACK FILL DEPRESSIONS, FOUNDATION HOLES AND REMOVED DRIVEWAY AREAS IN LOCATIONS NOT SUBJECT TO FURTHER EXCAVATION WITH SOIL MATERIAL APPROVED BY THE OWNER'S GEOTECHNICAL ENGINEER AND COMPACT, FERTILIZE, SEED AND MULCH DISTURBED AREAS NOT SUBJECT TO FURTHER SITE CONSTRUCTION. DEMOLISHED BUILDING FOUNDATION AREA AND BASEMENT IF PRESENT TO BE BACKFILLED WITH GRAVEL FILL OR MATERIAL SPECIFIED IN THE PROJECT GEOTECHNICAL REPORT IN LIFT THICKNESS SPECIFIED IN THE GEOTECHNICAL REPORT. COMPACT TO 95% MAX. DRY DENSITY PER ASTM D1557 AT MOISTURE CONTENT SPECIFIED IN GEOTECHNICAL REPORT AND EARTHWORK SPECIFICATION. EMPLOY WATERING EQUIPMENT FOR DUST CONTROL.
53. THE CONTRACTOR SHALL REPAIR PAVEMENTS BY INSTALLING TEMPORARY AND PERMANENT PAVEMENTS IN PUBLIC RIGHTS OF WAYS AS REQUIRED BY LOCAL GOVERNING AUTHORITIES AND THE MUNICIPALITY AND PER PERMIT REQUIREMENTS DUE TO DEMOLITION AND PIPE REMOVAL ACTIVITIES.
54. THE CONTRACTOR SHALL CUT AND REMOVE AT ANY LUMINARE AND SIGN LOCATIONS TO BE REMOVED ANY PROTRUDING CONDUITS TO 24" BELOW GRADE. THE CONTRACTOR SHALL REMOVE ALL CABLE AND CONDUCTORS FROM REMAINING LIGHTING AND SIGNING CONDUITS TO BE ABANDONED. ANY REMAINING LIGHTING TO REMAIN IN PLACE SHALL BE RECIRCUITED OR REWIRED AS NECESSARY TO REMAIN IN OPERATION.
55. NO WORK ON THIS SITE SHALL BE INITIATED BY THE CONTRACTOR UNTIL A PRE-CONSTRUCTION MEETING WITH OWNER AND THE CIVIL ENGINEER IS PERFORMED. THE CONTRACTOR SHOULD BE AWARE OF ANY SITE INFORMATION AVAILABLE SUCH AS GEOTECHNICAL AND ENVIRONMENTAL REPORTS. THE CONTRACTOR SHALL HAVE CALL BEFORE YOU DIG (CBYD) MARK OUTS OF EXISTING UTILITIES COMPLETED PRIOR TO MEETING.
56. THE CONTRACTOR SHALL ARRANGE FOR AND INSTALL TEMPORARY OR PERMANENT UTILITY CONNECTIONS WHERE INDICATED ON PLAN OR AS REQUIRED. MAINTAIN UTILITY SERVICES TO BUILDINGS OR TO SERVICES TO REMAIN. CONTRACTOR TO COORDINATE WITH UTILITY PROVIDERS FOR INSTALLATION AND PAY UTILITY PROVIDER FEES.
57. THE CONTRACTOR SHALL NOT COMMENCE DEMOLITION OR UTILITY DISCONNECTIONS UNTIL AUTHORIZED TO DO SO BY THE OWNER.
58. THE CONTRACTOR OR DEMOLITION CONTRACTOR SHALL INSTALL TEMPORARY SHEETING OR SHORING AS NECESSARY TO PROTECT EXISTING AND NEW BUILDINGS, STRUCTURES AND UTILITIES DURING CONSTRUCTION AND DEMOLITION. SHEETING OR SHORING SHALL BE DESIGNED BY A PROFESSIONAL ENGINEER, LICENSED IN THIS STATE AND EVIDENCE OF SUCH SUBMITTED TO THE OWNER PRIOR TO INSTALLATION.
59. NO SALVAGE SHALL BE PERMITTED UNLESS PAID TO THE OWNER AS A CREDIT.
60. ANY EXISTING POTABLE WELL AND ANY EXISTING SEPTIC TANKS/ABSORPTION AREAS SHALL BE ABANDONED AND REMOVED PER THE CTDPH AND HEALTH CODE REQUIREMENTS.
61. THE CONTRACTOR SHALL PRESERVE EXISTING VEGETATION WHERE POSSIBLE AND/OR AS NOTED ON DRAWINGS. REFER TO SEDIMENT AND EROSION CONTROL PLAN FOR LIMIT OF DISTURBANCE AND EROSION CONTROL NOTES.
62. TOPSOIL SHALL BE STRIPPED AND STOCKPILED ON SITE FOR USE IN FINAL LANDSCAPING.
63. SUBGRADE SHALL BE FORMED WITH REMOVAL AND REPLACEMENT OF FILL AND REMOVAL AND REPLACEMENT OF UNSUITABLE AND SOFT SUBGRADE MATERIAL AS REQUIRED BY THE GEOTECHNICAL ENGINEER. SEE GEOTECHNICAL REPORT AND EARTHWORK SPECIFICATIONS FOR FURTHER DESCRIPTION.
64. THE CONTRACTOR SHALL COMPACT FILL IN LIFT THICKNESS PER THE GEOTECHNICAL REPORT UNDER ALL PARKING, BUILDING, DRIVE, AND STRUCTURE AREAS TO 95% OF THE MAXIMUM DRY DENSITY AS DETERMINED BY ASTM D1557 (MODIFIED PROCTOR TEST), OR AS REQUIRED BY THE GEOTECHNICAL ENGINEER.
65. UNDERDRAINS SHALL BE ADDED, IF DETERMINED NECESSARY IN THE FIELD BY THE OWNER/GEOTECHNICAL ENGINEER, AFTER SUBGRADE IS ROUGH GRADED.
66. VERTICAL DATUM IS NGVD29.
67. CLEARING LIMITS SHALL BE PHYSICALLY MARKED IN THE FIELD AND APPROVED BY THE TOWN IWA/CC AGENT PRIOR TO THE START OF WORK ON THE SITE.
68. PROPER CONSTRUCTION PROCEDURES SHALL BE FOLLOWED ON ALL IMPROVEMENTS WITHIN THIS PARCEL SO AS TO PREVENT THE SILTING OF ANY WATERCOURSE OR WETLANDS IN ACCORDANCE WITH THE REGULATIONS OF THE CT DEEP AND THE 2002 CONNECTICUT GUIDELINES FOR SOIL EROSION AND SEDIMENT CONTROL, LATEST EDITION. IN ADDITION, THE CONTRACTOR SHALL STRICTLY ADHERE TO THE SEDIMENT AND EROSION CONTROL PLAN CONTAINED HEREIN. THE CONTRACTOR SHALL BE RESPONSIBLE TO POST ALL BONDS AS REQUIRED BY THE LOCAL MUNICIPALITIES, OR IWA/CC WHICH WOULD GUARANTEE THE PROPER IMPLEMENTATION OF THE PLAN.
69. ALL SITE WORK, MATERIALS OF CONSTRUCTION, AND CONSTRUCTION METHODS FOR EARTHWORK AND STORM DRAINAGE WORK SHALL CONFORM TO THE SPECIFICATIONS AND DETAILS AND APPLICABLE SECTIONS OF THE PROJECT SPECIFICATIONS MANUAL. OTHERWISE THIS WORK SHALL CONFORM TO THE CONNECTICUT DEPARTMENT OF TRANSPORTATION SPECIFICATIONS AND PROJECT GEOTECHNICAL REPORT IF THERE IS NO PROJECT SPECIFICATIONS MANUAL. ALL FILL MATERIAL UNDER STRUCTURES AND PAVED AREAS SHALL BE PER THE ABOVE STATED APPLICABLE SPECIFICATIONS, AND/OR PROJECT GEOTECHNICAL REPORT, AND SHALL BE PLACED IN ACCORDANCE WITH THE APPLICABLE SPECIFICATIONS UNDER THE SUPERVISION OF A QUALIFIED PROFESSIONAL ENGINEER. MATERIAL SHALL BE COMPACTED IN LIFT THICKNESSES PER THE PROJECT GEOTECHNICAL REPORT TO 95% OF THE MAXIMUM DRY DENSITY AS DETERMINED BY ASTM D 1557 AT MOISTURE CONTENT INDICATED IN PROJECT GEOTECHNICAL REPORT.
70. ALL DISTURBANCE INCURRED TO MUNICIPAL AND STATE PROPERTY DUE TO CONSTRUCTION SHALL BE RESTORED TO ITS PREVIOUS CONDITION OR BETTER, TO THE SATISFACTION OF THE MUNICIPALITY AND STATE AS APPLICABLE FOR THE LOCATION OF THE WORK.
71. ALL CONSTRUCTION WITHIN A DOT RIGHT OF WAY SHALL COMPLY WITH ALL DEPARTMENT OF TRANSPORTATION STANDARDS AND SPECIFICATIONS.
72. THE UTILITY PLAN DETAILS SITE INSTALLED PIPES UP TO 5' FROM THE BUILDING FACE. REFER TO DRAWINGS BY ARCHITECT FOR BUILDING CONNECTIONS. SITE CONTRACTOR SHALL SUPPLY AND INSTALL PIPE ADAPTERS AS NECESSARY AT BUILDING CONNECTION POINT OR AT EXISTING UTILITY OR PIPE CONNECTION POINT.
73. THE CONTRACTOR SHALL VISIT THE SITE AND VERIFY THE ELEVATION AND LOCATION OF ALL UTILITIES BY VARIOUS MEANS PRIOR TO BEGINNING ANY EXCAVATION. TEST PITS SHALL BE DUG AT ALL LOCATIONS WHERE PROPOSED SANITARY SEWERS AND WHERE PROPOSED STORM PIPING WILL CROSS EXISTING UTILITIES, AND THE HORIZONTAL AND VERTICAL LOCATIONS OF THE UTILITIES SHALL BE DETERMINED. THE CONTRACTOR SHALL CONTACT THE CIVIL ENGINEER IN THE EVENT OF ANY DISCOVERED OR UNFORESEEN CONFLICTS BETWEEN EXISTING AND PROPOSED SANITARY SEWERS, STORM PIPING AND UTILITIES SO THAT AN APPROPRIATE MODIFICATION MAY BE MADE.
74. UTILITY CONNECTION DESIGN AS REFLECTED ON THE PLAN MAY CHANGE SUBJECT TO UTILITY PROVIDER AND GOVERNING AUTHORITY STAFF REVIEW.
75. THE CONTRACTOR SHALL ENSURE THAT ALL UTILITY PROVIDERS AND GOVERNING AUTHORITY STANDARDS FOR MATERIALS AND CONSTRUCTION METHODS ARE MET. THE CONTRACTOR SHALL PERFORM PROPER COORDINATION WITH THE RESPECTIVE UTILITY PROVIDER.
76. THE CONTRACTOR SHALL ARRANGE FOR AND COORDINATE WITH THE RESPECTIVE UTILITY PROVIDERS FOR SERVICE INSTALLATIONS AND CONNECTIONS. THE CONTRACTOR SHALL COORDINATE WORK TO BE PERFORMED BY THE VARIOUS UTILITY PROVIDERS AND SHALL PAY ALL FEES FOR CONNECTIONS, DISCONNECTIONS, RELOCATIONS, INSPECTIONS, AND DEMOLITION UNLESS OTHERWISE STATED IN THE PROJECT SPECIFICATIONS MANUAL AND/OR GENERAL CONDITIONS OF THE CONTRACT.
77. ALL EXISTING PAVEMENT WHERE UTILITY PIPING IS TO BE INSTALLED SHALL BE SAW CUT. AFTER UTILITY INSTALLATION IS COMPLETED, THE CONTRACTOR SHALL INSTALL TEMPORARY AND/OR PERMANENT PAVEMENT REPAIR AS DETAILED ON THE DRAWINGS OR AS REQUIRED BY THE OWNER HAVING JURISDICTION.
78. ALL PIPES SHALL BE LAID ON STRAIGHT ALIGNMENTS AND EVEN GRADES USING A PIPE LASER OR OTHER ACCURATE METHOD.
79. SANITARY LATERAL SHALL MAINTAIN (10' MIN. HORIZONTAL 1.5' VERTICAL MIN.) SEPARATION DISTANCE FROM WATER LINES, OR ADDITIONAL PROTECTION MEASURES WILL BE REQUIRED WHERE PERMITTED, WHICH SHALL INCLUDE CONCRETE ENCASEMENT OF PIPING UNLESS OTHERWISE DIRECTED BY THE UTILITY PROVIDERS AND CIVIL ENGINEER.
80. RELOCATION OF UTILITY PROVIDER FACILITIES SHALL BE DONE IN ACCORDANCE WITH THE REQUIREMENTS OF THE UTILITY PROVIDER.
81. THE CONTRACTOR SHALL COMPACT THE PIPE BACKFILL IN 8" LIFTS ACCORDING TO THE PIPE BEDDING DETAILS. TRENCH BOTTOM SHALL BE STABLE IN HIGH GROUNDWATER AREAS. A PIPE FOUNDATION SHALL BE USED PER THE TRENCH DETAILS AND IN AREAS OF ROCK EXCAVATION. STORM SEWERS AND UTILITIES ARE TO BE INSTALLED IN CUT CONDITIONS.
82. CONTRACTOR TO PROVIDE STEEL SLEEVES AND ANNULAR SPACE SAND FILL FOR UTILITY PIPE AND CONDUIT CONNECTIONS UNDER FOOTINGS.
83. BUILDING UTILITY PENETRATIONS AND LOCATIONS ARE SHOWN FOR THE CONTRACTOR'S INFORMATION AND SHALL BE VERIFIED WITH THE BUILDING MEP, STRUCTURAL, AND ARCHITECTURAL DRAWINGS AND WITH THE OWNER'S CONSTRUCTION MANAGER.
84. ALL UTILITY CONSTRUCTION IS SUBJECT TO INSPECTION FOR APPROVAL PRIOR TO BACKFILLING, IN ACCORDANCE WITH THE APPROPRIATE UTILITY PROVIDER REQUIREMENTS.
85. A ONE-FOOT MINIMUM VERTICAL CLEARANCE BETWEEN WATER, GAS, ELECTRICAL, AND TELEPHONE LINES AND STORM PIPING SHALL BE PROVIDED. A SIX-INCH MINIMUM CLEARANCE SHALL BE MAINTAINED BETWEEN STORM PIPING AND SANITARY SEWER WITH A CONCRETE ENCASEMENT. AN 18-INCH TO 6-INCH VERTICAL CLEARANCE BETWEEN SANITARY SEWER PIPING AND STORM PIPING SHALL REQUIRE CONCRETE ENCASEMENT OF THE PROPOSED PIPING.
86. GRAVITY SANITARY SEWER PIPING AND PRESSURIZED WATERLINES SHALL BE LOCATED IN SEPARATE TRENCHES AT LEAST 10 FEET APART WHENEVER POSSIBLE. WHEN INSTALLED IN THE SAME TRENCH, THE WATER PIPE SHALL BE LAID ON A TRENCH BENCH AT LEAST 18 INCHES ABOVE THE TOP OF THE SANITARY SEWER PIPE AND AT LEAST 12 INCHES (PREFERABLY 18 INCHES) FROM THE SIDE OF THE SANITARY SEWER PIPE TRENCH.
87. SITE CONTRACTOR SHALL PROVIDE ALL BENDS, FITTINGS, ADAPTERS, ETC., AS REQUIRED FOR PIPE CONNECTIONS TO BUILDING STUB OUTS, INCLUDING ROOF/FOOTING DRAIN CONNECTIONS TO ROOF LEADERS AND TO STORM DRAINAGE SYSTEM.
88. MANHOLE RIMS AND CATCH BASIN GRATES SHALL BE SET TO ELEVATIONS SHOWN. SET ALL EXISTING MANHOLE RIMS AND VALVE COVERS TO BE RAISED OR LOWERED FLUSH WITH FINAL GRADE AS NECESSARY.
89. SITE CONTRACTOR SHALL COORDINATE INSTALLATION OF CONDUIT AND CABLES FOR SITE LIGHTING WITH THE BUILDING ELECTRICAL CONTRACTOR.
90. CONTRACTOR SHALL COORDINATE INSTALLATION FOR ELECTRICAL SERVICES TO ANY PYLON SIGNS AND SITE LIGHTING WITH THE BUILDING ELECTRICAL CONTRACTOR.
91. THE CONTRACTOR SHALL ARRANGE AND COORDINATE WITH UTILITY PROVIDERS FOR WORK TO BE PERFORMED BY UTILITY PROVIDERS. THE CONTRACTOR SHALL PAY ALL UTILITY FEES UNLESS OTHERWISE STATED IN THE PROJECT SPECIFICATION MANUAL AND GENERAL CONDITIONS, AND REPAIR PAVEMENTS AS NECESSARY.
92. ELECTRIC, AND TELECOMMUNICATIONS SERVICES SHALL BE INSTALLED UNDERGROUND FROM EXISTING UNDERGROUND SERVICES. THE CONTRACTOR SHALL PROVIDE AND INSTALL AND BACKFILL PVC CONDUITS AS SHOWN ON PLANS FOR TELECOMMUNICATIONS SERVICE, PVC CONDUITS AS SHOWN ON PLANS FOR ELECTRIC SERVICE PRIMARY, PVC CONDUITS FOR ELECTRICAL SECONDARY PER BUILDING ELECTRICAL PLANS, (SCHEDULE 80 UNDER PAVEMENT, SCHEDULE 40 IN NON PAVEMENT AREAS). SERVICES MAY BE INSTALLED IN A COMMON TRENCH WITH 12" CLEAR SPACE BETWEEN. MINIMUM COVER IS 36" ON ELECTRIC CONDUITS, AND 24" ON TELECOMMUNICATIONS CONDUITS. SERVICES SHALL BE MARKED WITH MAGNETIC LOCATOR TAPE AND SHALL BE BEDDED, INSTALLED, AND BACKFILLED IN ACCORDANCE WITH ELECTRIC UTILITY PROVIDER, AND TELECOMMUNICATIONS COMPANY STANDARDS. GALVANIZED STEEL ELECTRICAL CONDUIT SHALL BE USED AT POLE AND TRANSFORMER LOCATIONS. INSTALL HANDHOLES AS REQUIRED TO FACILITATE INSTALLATION AND AS REQUIRED BY UTILITY PROVIDER. INSTALL TRAFFIC LOAD QUALIFIED HANDHOLES IN VEHICULAR AREAS. INSTALL CONCRETE ENCASEMENT ON PRIMARY ELECTRIC CONDUITS IF REQUIRED BY ELECTRIC UTILITY PROVIDER.
93. ALL WATER LINES TO HAVE A MINIMUM COVER OF 54 INCHES. ALL LINES SHALL BE BEDDED IN 6" SAND AND INITIALLY BACKFILLED WITH 12" SAND.
94. ALL WATER MAINS, WATER SERVICES AND SANITARY SEWER LATERALS SHALL CONFORM TO THE APPLICABLE WATER UTILITY PROVIDER SPECIFICATIONS, AND TO THE APPLICABLE SANITARY SEWER PROVIDER SPECIFICATIONS, AS WELL AS TO OTHER APPLICABLE INDUSTRY CODES (AWWA) AND PROJECT SPECIFICATIONS FOR POTABLE WATER SYSTEMS, AND FOR SANITARY SEWER SYSTEMS.
95. THE CONTRACTOR SHALL MAINTAIN ALL FLOWS AND

SITE PLAN LEGEND

- PROPERTY LINE
- LOD — LIMIT OF DISTURBANCE AND SITEWORK CONTRACT LIMIT LINE
- DEVELOPMENT AREA LINE
- SAWCUT LINE
- PROVIDE AND INSTALL MODULAR BLOCK RETAINING WALL
- PROVIDE AND INSTALL CURB
- PROVIDE AND INSTALL WOOD GUIDERAIL
- PROVIDE AND INSTALL CONCRETE PAVEMENT STRUCTURE OR REINFORCED CONCRETE SIDEWALK
- PROVIDE AND INSTALL FULL DEPTH BITUMINOUS CONCRETE PAVEMENT STRUCTURE
- PROVIDE AND INSTALL BITUMINOUS CONCRETE PAVEMENT STRUCTURE PER TOWN OF SOUTH WINDSOR STANDARD DETAIL
- PROVIDE AND INSTALL FULL DEPTH HEAVY DUTY BITUMINOUS CONCRETE PAVEMENT STRUCTURE

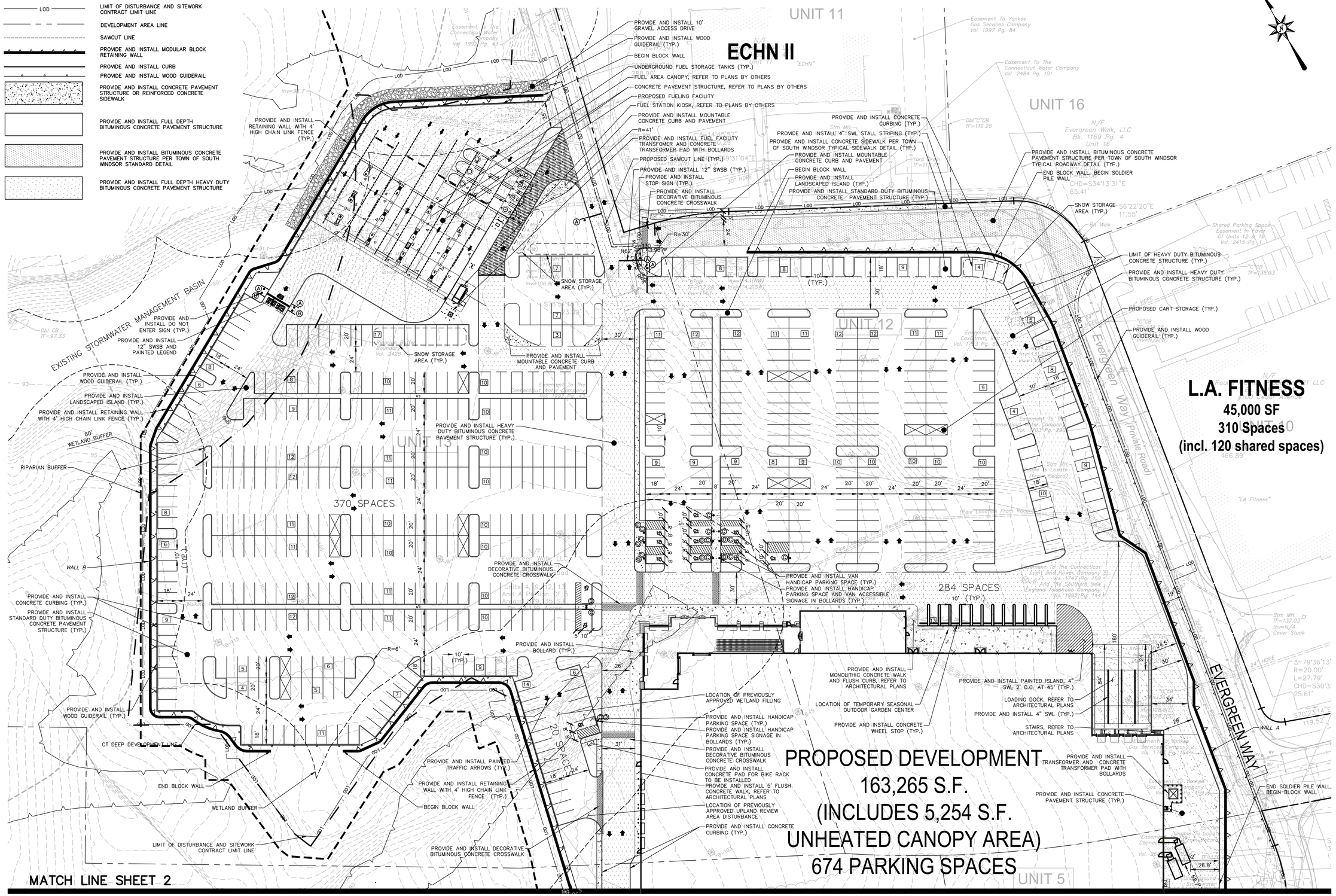

REFER TO SHEET SP-2 FOR SIGN & ZONING INFORMATION

FOR PERMITTING PURPOSES ONLY
NOT RELEASED FOR CONSTRUCTION

GRAPHIC SCALE
40 20 0 40
SCALE IN FEET

© 2020 BL COMPANIES, INC. THESE DRAWINGS SHALL NOT BE UTILIZED BY ANY PERSON, FIRM OR CORPORATION WITHOUT THE SPECIFIC WRITTEN PERMISSION OF BL COMPANIES.

Architecture
Engineering
Environmental
Land Surveying
BL Companies
100 Constitution Plaza, 10th Floor
Hartford, CT 06103
(860) 249-2200
(860) 249-2400 Fax

STATE OF CONNECTICUT
MICHELLE M. CARSON
No.20951
LICENSED
PROFESSIONAL ENGINEER

PROPOSED DEVELOPMENT
EVERGREEN WALK - UNIT 12
151 BUCKLAND ROAD
SOUTH WINDSOR, CONNECTICUT

REVISIONS No.	Date	Desc.
1	01/06/2020	DRAINAGE MODIFICATION
2	08/14/2020	PLANNING AND ZONING SUBMISSION
3	10/20/2020	RESPONSE TO COMMENTS

Designed	J.A.B.
Drawn	S.E.L.
Reviewed	
Scale	1"=40'
Project No.	13C4718
Date	09/18/2019
CAD File: SP13C471801	

Title
SITE PLAN

Sheet No.
SP-1

Xref (s): : BD13C471801 : XC13C471801 : XF13C471803 : XY13C471801 : External : XO13C471801-Hydrochase

10/20/2020, AKEVGES, G:\JOBS13\C13\C4718\DWGS\SP13C471801.DWG SP-1 24X36 40C

SITE PLAN LEGEND

- PROPERTY LINE
- LOD — LIMIT OF DISTURBANCE AND SITEWORK CONTRACT LIMIT LINE
- DEVELOPMENT AREA LINE
- SAWCUT LINE
- PROVIDE AND INSTALL MODULAR BLOCK RETAINING WALL
- PROVIDE AND INSTALL CURB
- PROVIDE AND INSTALL WOOD GUIDERAIL
- PROVIDE AND INSTALL CONCRETE PAVEMENT STRUCTURE OR REINFORCED CONCRETE SIDEWALK
- PROVIDE AND INSTALL FULL DEPTH BITUMINOUS CONCRETE PAVEMENT STRUCTURE
- PROVIDE AND INSTALL BITUMINOUS CONCRETE PAVEMENT STRUCTURE PER TOWN OF SOUTH WINDSOR STANDARD DETAIL
- PROVIDE AND INSTALL FULL DEPTH HEAVY DUTY BITUMINOUS CONCRETE PAVEMENT STRUCTURE
- PROVIDE AND INSTALL TRAFFIC SIGN

SIGN LEGEND

SIGN NO.	CT-DOT NO. OR MUTCD NO.	LEGEND
A	31-0552	STOP 30"
B	31-1119	DO NOT ENTER
C	31-0629	$250 FINE IN 1st YEAR $500 FINE THEREAFTER HANDICAPPED PARKING FINE STARTS HERE
D	31-0648	VAN ACCESSIBLE

NOTE: HANDICAPPED SIGNS TO BE INSTALLED IN PIPE BOLLARDS (SEE DETAIL). ALL HANDICAP SIGNAGE TO CONFORM TO LATEST BUILDING CODE.

ZONING INFORMATION

LOCATION: SOUTH WINDSOR, CONNECTICUT

ZONE: GD (BUCKLAND ROAD GATEWAY DEVELOPMENT)

USE: RETAIL (PERMITTED USE WITH SITE PLAN)

ITEM #	ITEM	REQUIREMENTS	PROPOSED	VARIANCE
1	BUILDING SIZE	NONE REQUIRED	163,265 S.F.	NO
2	MAXIMUM BUILDING HEIGHT	60 FEET/4 STORIES	<60 FEET	NO
3	FRONT YARD SETBACK	65 FEET	516 FEET –BUCKLAND ROAD 1275 FEET –DEMING STREET	NO
4	BICYCLE PARKING DIMENSIONS	6 FEET X 2 FEET	6 FEET X 4 FEET	NO
5	PARKING REQUIRED	RETAIL: 1 SPACE PER EVERY 200 S.F. OF GROSS FLOOR AREA (163,265 S.F.) TOTAL REQUIRED = 817	674 SPACES	NO*
6	MINIMUM HANDICAPPED PARKING SPACES REQUIRED	14 SPACES	14 SPACES	NO
7	MINIMUM PARKING DIMENSIONS	9 FEET X 18 FEET	10 FEET X 18 FEET	NO
8	MINIMUM AISLE WIDTH	24 FEET – 2-WAY 16 FEET – 1-WAY	24 FEET – 2-WAY	NO
9	IMPERVIOUS COVERAGE	60 PERCENT	<60 PERCENT	NO
10	MINIMUM INTERIOR LANDSCAPING	10 PERCENT OF INTERIOR PARKING AREAS	10.0 PERCENT	NO

* MODIFICATION OF MINIMUM PARKING SPACES PER SECTION 6.4.9 OF THE ZONING REGULATIONS WILL BE REQUESTED.

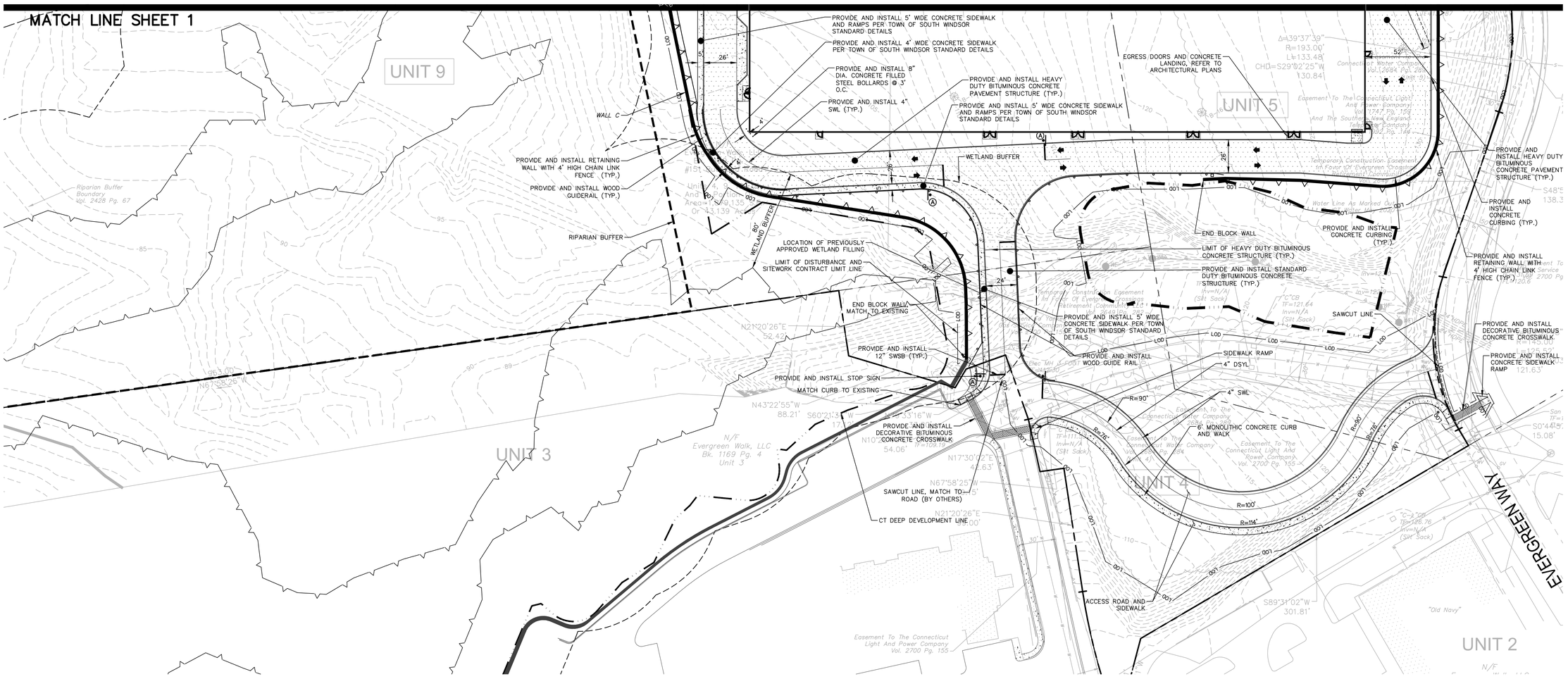

FOR PERMITTING PURPOSES ONLY
NOT RELEASED FOR CONSTRUCTION

Architecture Engineering Environmental Land Surveying
BL Companies
100 Constitution Plaza, 10th Floor
Hartford, CT 06103
(860) 249-2200
(860) 249-2400 Fax

STATE OF CONNECTICUT MICHELLE M. CARLSON No.20951 LICENSED PROFESSIONAL ENGINEER

PROPOSED DEVELOPMENT
EVERGREEN WALK - UNIT 12
151 BUCKLAND ROAD
SOUTH WINDSOR, CONNECTICUT

REVISIONS

No.	Date	Desc.
1	01/06/2020	DRAINAGE MODIFICATION
2	08/14/2020	PLANNING AND ZONING SUBMISSION
3	10/20/2020	RESPONSE TO COMMENTS

Designed	J.A.B.
Drawn	S.E.L.
Reviewed	
Scale	1"=40'
Project No.	13C4718
Date	09/18/2019

CAD File: SP13C471801

Title: SITE PLAN

Sheet No. SP-2

Xref (s): BD13C471801 ; XC13C471801 ; XF13C471803 ; XY13C471801 ; External : X:\13C471801-Hartchorse

10/20/2020, JBARTS, G:\JOBS\13\13C4718\DWGS\P13C471801.DWG\SP-2 24X36 40SC

© 2020 BL COMPANIES, INC. THESE DRAWINGS SHALL NOT BE UTILIZED BY ANY PERSON, FIRM OR CORPORATION WITHOUT THE SPECIFIC WRITTEN PERMISSION OF BL COMPANIES.

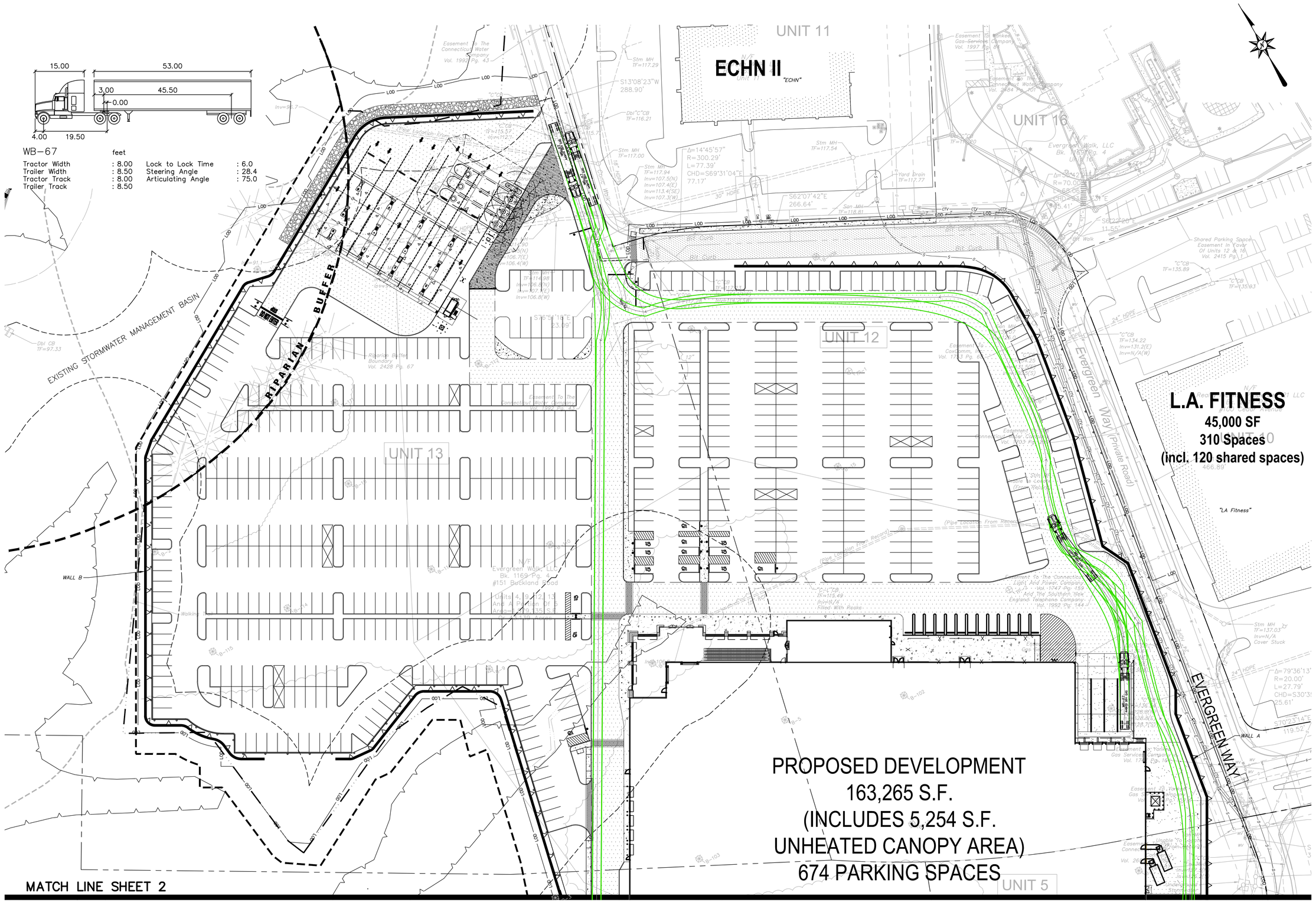

FOR PERMITTING PURPOSES ONLY
NOT RELEASED FOR CONSTRUCTION

GRAPHIC SCALE
40 20 0 40
SCALE IN FEET

Architecture
Engineering
Environmental
Land Surveying
BL Companies
100 Constitution Plaza, 10th Floor
Hartford, CT 06103
(860) 249-2200
(860) 249-2400 Fax

STATE OF CONNECTICUT
MICHELLE M. CARSON
No.20951
LICENSED
PROFESSIONAL ENGINEER

PROPOSED DEVELOPMENT
EVERGREEN WALK - UNIT 12
151 BUCKLAND ROAD
SOUTH WINDSOR, CONNECTICUT

REVISIONS

No.	Date	Desc.
1	01/24/2020	DRAINAGE MODIFICATION
2	08/14/2020	PLANNING AND ZONING SUBMISSION
3	10/20/2020	RESPONSE TO COMMENTS

Designed	J.A.B.
Drawn	S.E.L.
Reviewed	
Scale	1"=40'
Project No.	13C4718
Date	09/18/2019
CAD File: TT13C471801	

Title
TRUCK TURN
PLAN - WB-67

Sheet No.
TT-1

Xref (s) : BD13C471801 ; XC13C471801 ; XT13C471803 ; XY13C471801 ; External ; XO13C471801-Hartborchase

© 2020 BL COMPANIES, INC. THESE DRAWINGS SHALL NOT BE UTILIZED BY ANY PERSON, FIRM OR CORPORATION WITHOUT THE SPECIFIC WRITTEN PERMISSION OF BL COMPANIES.

10/20/2020, KRUGER, GVLORBS N:\3C\13C4718\DWGS\TT\13C471801.DWG-TT1-24X36.ARDC

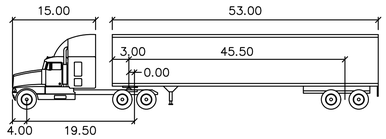

WB-67 feet

Tractor Width	: 8.00	Lock to Lock Time	: 6.0
Trailer Width	: 8.50	Steering Angle	: 28.4
Tractor Track	: 8.00	Articulating Angle	: 75.0
Trailer Track	: 8.50		

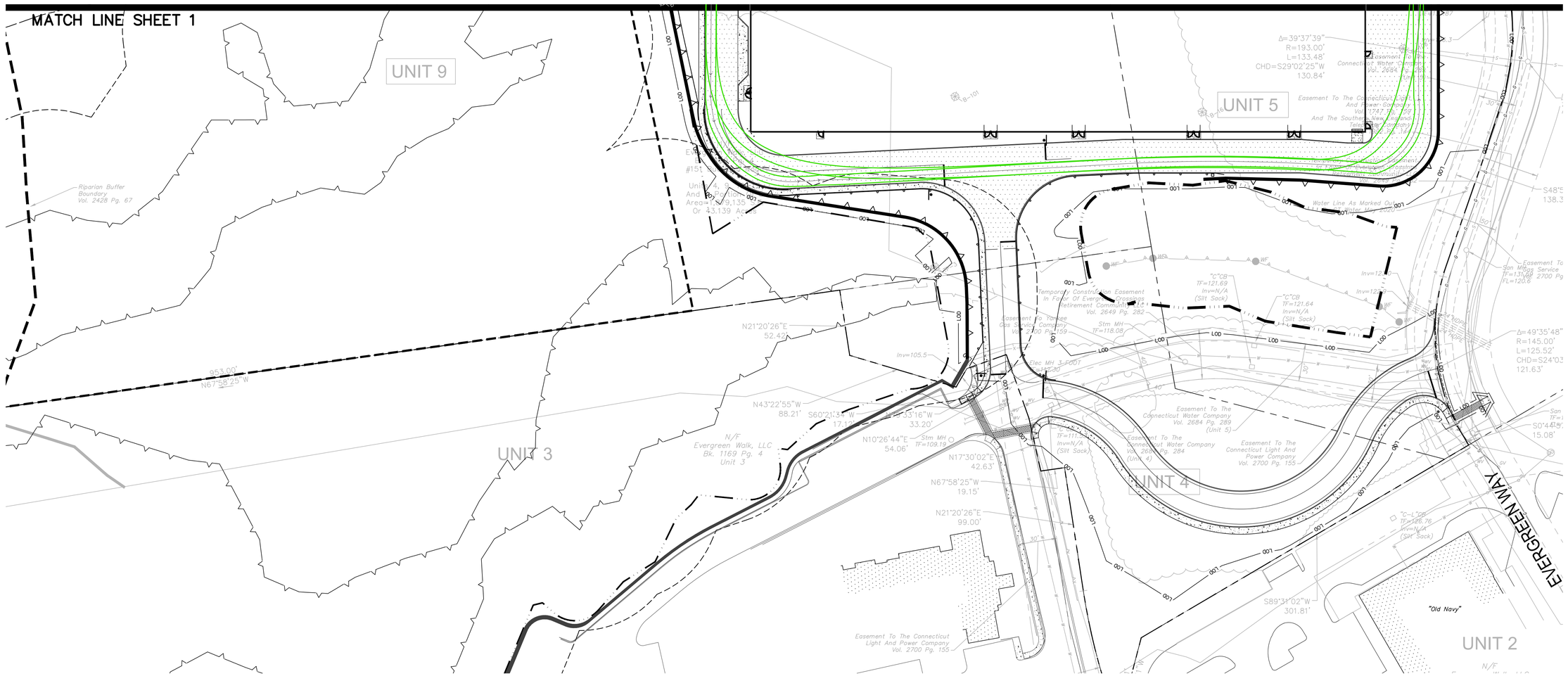

FOR PERMITTING PURPOSES ONLY
NOT RELEASED FOR CONSTRUCTION

GRAPHIC SCALE
40 20 0 40
SCALE IN FEET

Architecture
Engineering
Environmental
Land Surveying

BL Companies

100 Constitution Plaza, 10th Floor
Hartford, CT 06103
(860) 249-2200
(860) 249-2400 Fax

STATE OF CONNECTICUT
MICHELLE M. CARLSON
No.20951
LICENSED
PROFESSIONAL ENGINEER

PROPOSED DEVELOPMENT

EVERGREEN WALK - UNIT 12
151 BUCKLAND ROAD
SOUTH WINDSOR, CONNECTICUT

Desc.
DRAINAGE MODIFICATION
PLANNING AND ZONING SUBMISSION
RESPONSE TO COMMENTS

REVISIONS

No.	Date
1	01/06/2020
2	08/14/2020
3	10/20/2020

Designed	J.A.B.
Drawn	S.E.L.
Reviewed	
Scale	1"=40'
Project No.	13C4718
Date	09/18/2019

CAD File:
TT13C471801

Title
TRUCK TURN
PLAN - WB-67

Sheet No.

TT-2

Xref (s) : BD13C471801 ; XC13C471801 ; XT13C471803 ; XY13C471801, Extend ; XO13C471801-Hatbacchae

10/20/2020, KKEVGES, GOLVERSI-US-TEC\13C471801\DWG\TT13C471801.DWG TT-2 24X36 40SC

© 2020 BL COMPANIES, INC. THESE DRAWINGS SHALL NOT BE UTILIZED BY ANY PERSON, FIRM OR CORPORATION WITHOUT THE SPECIFIC WRITTEN PERMISSION OF BL COMPANIES.

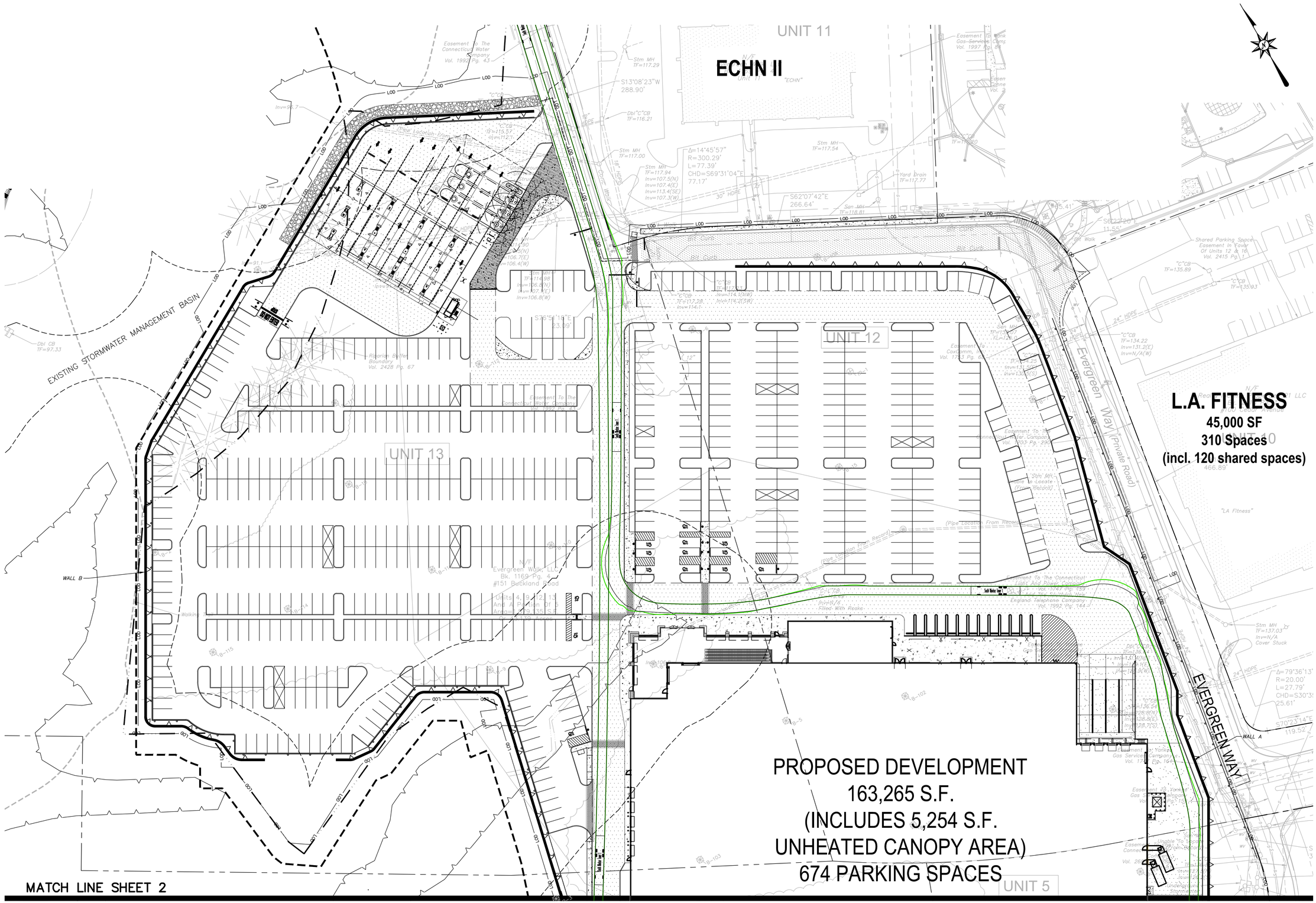

FOR PERMITTING PURPOSES ONLY
NOT RELEASED FOR CONSTRUCTION

GRAPHIC SCALE
40 20 0 40
SCALE IN FEET

Architecture
Engineering
Environmental
Land Surveying
BL Companies

100 Constitution Plaza, 10th Floor
Hartford, CT 06103
(860) 249-2200
(860) 249-2400 Fax

STATE OF CONNECTICUT
MICHELLE M. CARLSON
No. 20951
LICENSED
PROFESSIONAL ENGINEER

PROPOSED DEVELOPMENT
EVERGREEN WALK - UNIT 12
151 BUCKLAND ROAD
SOUTH WINDSOR, CONNECTICUT

REVISIONS

No.	Date	Desc.
1	01/24/2020	DRAINAGE MODIFICATION
2	08/14/2020	PLANNING AND ZONING SUBMISSION
3	10/20/2020	RESPONSE TO COMMENTS

Designed	J.A.B.
Drawn	S.E.L.
Reviewed	
Scale	1"=40'
Project No.	13C4718
Date	09/18/2019
CAD File: TT13C471802	

Title
TRUCK TURN
PLAN - FIRE

Sheet No.
TT-3

Xref (s) : BD13C471801 ; XC13C471801 ; XT13C471803 ; XC13C471801 ; XC13C471801-Harborchase

10/20/2020, KRUGER, GY, U:\BBS\N\13C\13C471801\DWG\TT13C471802.DWG,TT3-FARON.PC3

© 2020 BL COMPANIES, INC. THESE DRAWINGS SHALL NOT BE UTILIZED BY ANY PERSON, FIRM OR CORPORATION WITHOUT THE SPECIFIC WRITTEN PERMISSION OF BL COMPANIES.

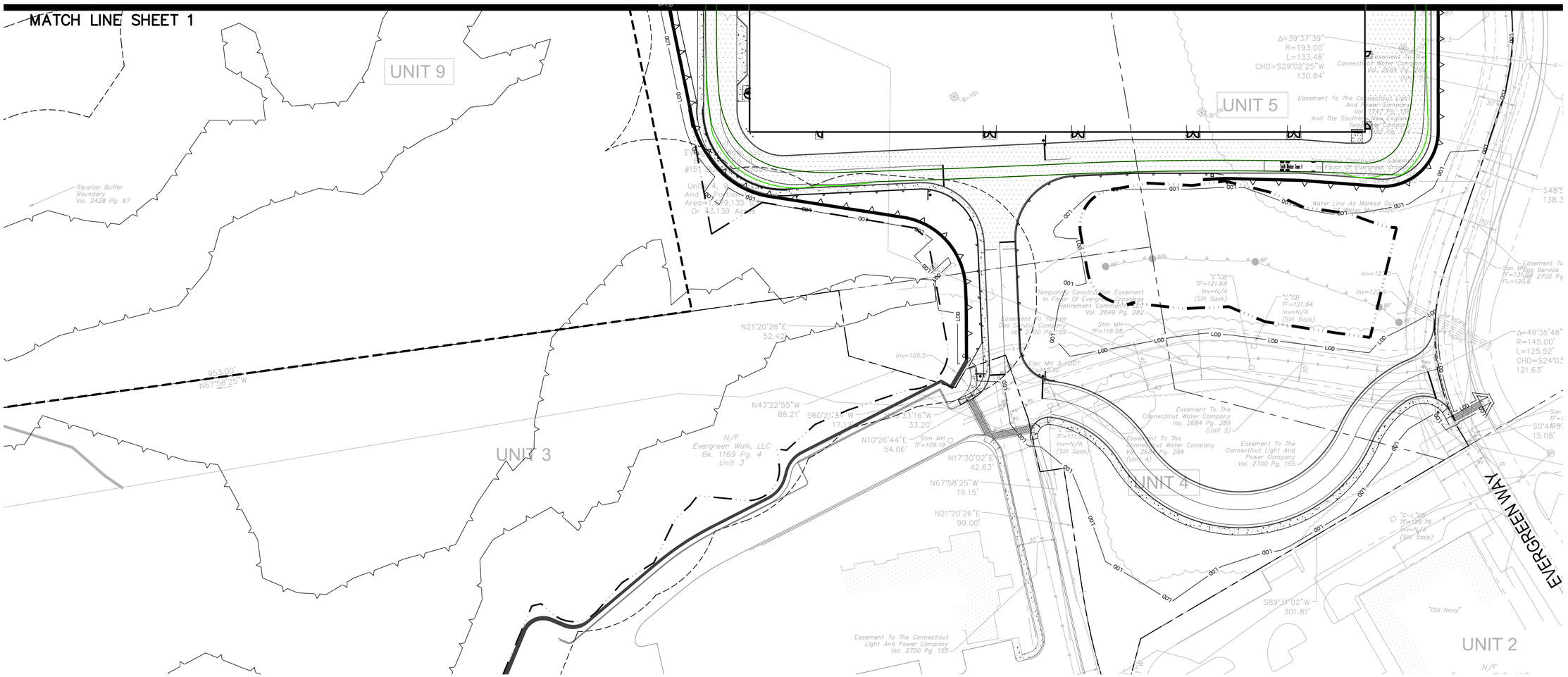

FOR PERMITTING PURPOSES ONLY
NOT RELEASED FOR CONSTRUCTION

GRAPHIC SCALE
40 20 0 40
SCALE IN FEET

Architecture
Engineering
Environmental
Land Surveying

BL Companies

100 Constitution Plaza, 10th Floor
Hartford, CT 06103
(860) 249-2200
(860) 249-2400 Fax

STATE OF CONNECTICUT
MICHELLE M. CARLSON
No. 20951
LICENSED
PROFESSIONAL ENGINEER

PROPOSED DEVELOPMENT

EVERGREEN WALK - UNIT 12
151 BUCKLAND ROAD
SOUTH WINDSOR, CONNECTICUT

REVISIONS

No.	Date	Desc.
1	01/04/2020	DRAINAGE MODIFICATION
2	08/14/2020	PLANNING AND ZONING SUBMISSION
3	10/20/2020	RESPONSE TO COMMENTS

Designed	J.A.B.
Drawn	S.E.L.
Reviewed	
Scale	1"=40'
Project No.	13C4718
Date	09/18/2019
CAD File: TT13C471802	

Title

TRUCK TURN PLAN - FIRE

Sheet No.

TT-4

Xref (s): : BD13C471801 : XC13C471801 : XF13C471803 : XY13C471801 - Harborchase

10/19/2020, KRUGER, ERIC LOREN N:\BCS\13C471801\DWGS\TT13C471802.DWG TT-4 ANSI A 40SC

© 2020 BL COMPANIES, INC. THESE DRAWINGS SHALL NOT BE UTILIZED BY ANY PERSON, FIRM OR CORPORATION WITHOUT THE SPECIFIC WRITTEN PERMISSION OF BL COMPANIES.

GRADING AND DRAINAGE LEGEND

- PROPERTY LINE
- LOD — LIMIT OF DISTURBANCE AND SITEWORK CONTRACT LIMIT LINE
- DEVELOPMENT AREA LINE
- SAWCUT LINE
- 47 48 — EXISTING ELEVATION CONTOURS (1' INTERVAL)
- 47 48 — PROPOSED ELEVATION CONTOURS (1' INTERVAL)
- PROVIDE AND INSTALL STORM DRAINAGE PIPE
- PROVIDE AND INSTALL TYPE C-L CATCH BASIN
- PROVIDE AND INSTALL TYPE C CATCH BASIN
- PROVIDE AND INSTALL TYPE C CATCH BASIN (TYPE 2)
- PROVIDE AND INSTALL STORM DRAINAGE MANHOLE OR OUTLET CONTROL STRUCTURE
- ×104.13 — PROPOSED SPOT GRADE

SPOT GRADE ABBREVIATIONS

BC	BOTTOM OF CURB
TC	TOP OF CURB
BL	BOTTOM OF LIP
TL	TOP OF LIP
MEX	MEET EXISTING CONDITION

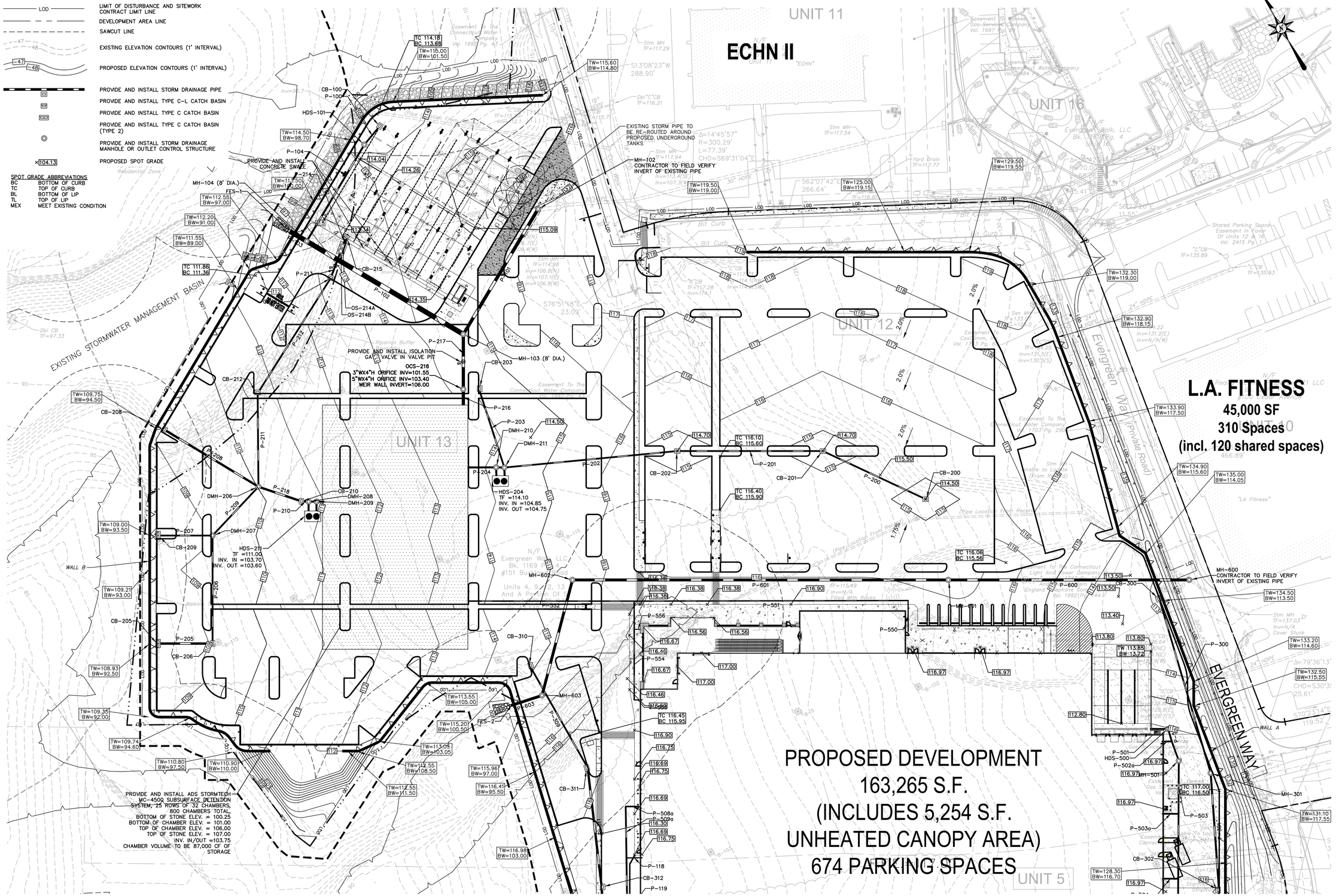

FOR PERMITTING PURPOSES ONLY
NOT RELEASED FOR CONSTRUCTION

GRAPHIC SCALE
40 20 0 40
SCALE IN FEET

© 2020 BL COMPANIES, INC. THESE DRAWINGS SHALL NOT BE UTILIZED BY ANY PERSON, FIRM OR CORPORATION WITHOUT THE SPECIFIC WRITTEN PERMISSION OF BL COMPANIES.

10/20/2020, KKUGLISS, G:\JOBS13\13C\13C4718\DWG\GD\13C471801.DWG-GD-1 24X36, 40SC

Architecture
Engineering
Environmental
Land Surveying

BL Companies

100 Constitution Plaza, 10th Floor
Hartford, CT 06103
(860) 249-2200
(860) 249-2400 Fax

STATE OF CONNECTICUT
MICHELLE M. CARLSON
No.20951
LICENSED
PROFESSIONAL ENGINEER

PROPOSED DEVELOPMENT
EVERGREEN WALK - UNIT 12
151 BUCKLAND ROAD
SOUTH WINDSOR, CONNECTICUT

REVISIONS

No.	Date	Desc.
1	01/06/2020	DRAINAGE MODIFICATION
2	09/14/2020	PLANNING SUBMISSION
3	10/20/2020	RESPONSE TO COMMENTS

Designed	J.A.B.
Drawn	S.E.L.
Reviewed	
Scale	1"=40'
Project No.	13C4718
Date	09/18/2019
CAD File:	GD13C471801

Title
GRADING AND DRAINAGE PLAN

Sheet No.
GD-1

Xref (s): - BD13C471801 - XC02 - XC01 - XC13C471801 - XV13C471801-Hardscape

GRADING AND DRAINAGE LEGEND

- PROPERTY LINE
- LOD — LIMIT OF DISTURBANCE AND SITEWORK CONTRACT LIMIT LINE
- DEVELOPMENT AREA LINE
- SAWCUT LINE
- 47 / 48 — EXISTING ELEVATION CONTOURS (1' INTERVAL)
- 47 / 48 — PROPOSED ELEVATION CONTOURS (1' INTERVAL)
- PROVIDE AND INSTALL STORM DRAINAGE PIPE
- PROVIDE AND INSTALL TYPE C-L CATCH BASIN
- PROVIDE AND INSTALL TYPE C CATCH BASIN
- PROVIDE AND INSTALL TYPE C CATCH BASIN (TYPE 2)
- PROVIDE AND INSTALL STORM DRAINAGE MANHOLE OR OUTLET CONTROL STRUCTURE
- ×104.13 — PROPOSED SPOT GRADE

SPOT GRADE ABBREVIATIONS

BC	BOTTOM OF CURB
TC	TOP OF CURB
BL	BOTTOM OF LIP
TL	TOP OF LIP
MEX	MEET EXISTING CONDITION

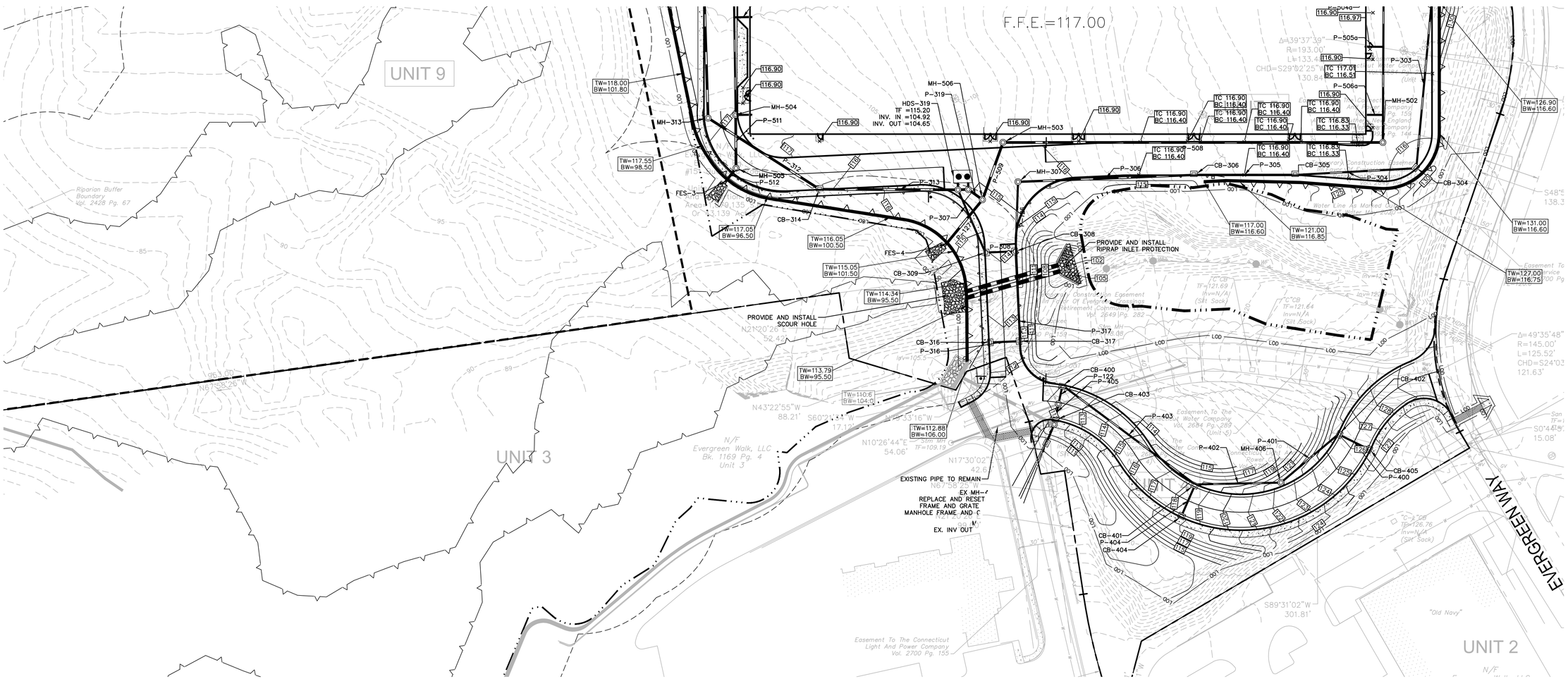

FOR PERMITTING PURPOSES ONLY
NOT RELEASED FOR CONSTRUCTION

GRAPHIC SCALE
40 20 0 40
SCALE IN FEET

Architecture
Engineering
Environmental
Land Surveying

BL Companies

100 Constitution Plaza, 10th Floor
Hartford, CT 06103
(860) 249-2200
(860) 249-2400 Fax

STATE OF CONNECTICUT
MICHELLE M. CARLSON
No.20951
LICENSED
PROFESSIONAL ENGINEER

PROPOSED DEVELOPMENT

EVERGREEN WALK - UNIT 12
151 BUCKLAND ROAD
SOUTH WINDSOR, CONNECTICUT

Desc.
DRAINAGE MODIFICATION
PLANNING & ZONING SUBMISSION
RESPONSE TO COMMENTS

REVISIONS

No.	Date	
1	07/14/2020	
2	09/14/2020	
3	10/20/2020	

Designed	J.A.B.
Drawn	S.E.L.
Reviewed	
Scale	1"=40'
Project No.	13C4718
Date	09/18/2019

CAD File: GD13C471801

Title
GRADING AND DRAINAGE PLAN

Sheet No.
GD-2

Xref (s): - BD13C471801 - XZ13C471801 - XC01 - XC13C471803 - XC02 - XC13C471803 - XY13C471801 - XG13C471801-Hatbackchase

10/20/2020, KKLOUIS, G:\JOBS13\13C\13C4718\DWG\GD\13C471801.DWG-GD-2 24X36 40IC.

© 2020 BL COMPANIES, INC. THESE DRAWINGS SHALL NOT BE UTILIZED BY ANY PERSON, FIRM OR CORPORATION WITHOUT THE SPECIFIC WRITTEN PERMISSION OF BL COMPANIES.

STORM STRUCTURE CHART

CB-100 TF=113.50	CB-310 TF=114.75	CB-502 TF=111.60	DMH-211 TF=116.69	MH-503 TF=116.80
CB-200 TF=114.50	CB-311 TF=115.70	CB-504 TF=0.61	DMH-319 TF=217.02	MH-504 TF=118.18
CB-201 TF=114.70	CB-312 TF=116.15	CB-505 TF=111.22	DMH-320 TF=222.79	MH-505 TF=117.85
CB-202 TF=114.70	CB-314 TF=116.10	CB-507 TF=0.61	EX MH-406 TF=112.15	MH-506 TF=209.17
CB-203 TF=114.50	CB-316 TF=112.87	CB-508 TF=0.61	FES-1 TF=114.26	MH-600 TF=137.10
CB-205 TF=108.33	CB-317 TF=113.37	CB-510 TF=0.60	FES-2 TF=101.10	MH-601 TF=116.36
CB-206 TF=109.77	CB-400 TF=110.05	CB-511 TF=83.97	FES-3 TF=99.64	MH-602 TF=117.04
CB-208 TF=109.15	CB-401 TF=118.37	CB-514 TF=113.01	FES-4 TF=104.71	MH-603 TF=116.63
CB-209 TF=108.45	CB-402 TF=126.00	CB-515 TF=116.09	HDS-101 TF=113.80	OCS-216 TF=115.53
CB-210 TF=110.53	CB-403 TF=112.01	CB-516 TF=118.60	HDS-500 TF=116.00	OS-214A TF=113.12
CB-212 TF=110.76	CB-404 TF=118.39	CB-517 TF=108.19	MH-102 TF=116.48	OS-214B TF=113.00
CB-213 TF=112.73	CB-405 TF=126.00	CB-518 TF=0.61	MH-103 (8' DIA.) TF=114.68	YD-408 TF=110.75
CB-215 TF=113.36	CB-494 TF=1.21	CB-519 TF=106.10	MH-104 (8' DIA.) TF=112.36	
CB-300 TF=113.17	CB-495 TF=110.04	CB-520 TF=0.61	MH-301 TF=116.40	
CB-302 TF=115.98	CB-496 TF=0.61	CB-522 TF=110.18	MH-307 TF=118.34	
CB-304 TF=115.75	CB-497 TF=110.32	DMH-206 TF=112.26	MH-313 TF=117.45	
CB-305 TF=116.00	CB-498 TF=0.61	DMH-207 TF=111.03	MH-406 TF=122.52	
CB-306 TF=116.00	CB-499 TF=110.56	DMH-208 TF=112.50	MH-407 TF=0.55	
CB-308 TF=116.47	CB-500 TF=0.61	DMH-209 TF=112.72	MH-501 TF=116.80	
CB-309 TF=115.92	CB-501 TF=110.87	DMH-210 TF=115.61	MH-502 TF=116.20	

STORM PIPE CHART

LINE EX P-401 12" L=105' S=6.08% INV IN 114.90 INV OUT 108.50	LINE P-104 12" RCP L=105' S=0.50% INV IN 110.72 INV OUT 110.19	LINE P-206 12" L=101' S=0.61% INV IN 105.15 INV OUT 104.53	LINE P-303 12" L=133' S=0.50% INV IN 108.92 INV OUT 108.26	LINE P-401 12" L=59' S=3.87% INV IN 115.50 INV OUT 113.20	LINE P-506 12" L=54' S=0.52% INV IN 109.21 INV OUT 108.93	LINE P-554 8" L=66' S=0.50% INV IN 109.73 INV OUT 110.06
LINE EX P-402 12" L=90' S=1.77% INV IN 105.50 INV OUT 103.90	LINE P-118 6" L=15' S=19.02% INV IN 113.00 INV OUT 110.22	LINE P-207 12" L=52' S=0.56% INV IN 104.65 INV OUT 104.36	LINE P-304 12" L=96' S=0.50% INV IN 108.26 INV OUT 107.78	LINE P-402 12" L=68' S=5.59% INV IN 113.00 INV OUT 109.20	LINE P-506a 12" L=13' S=839.90% INV IN 108.93 INV OUT 0.11	LINE P-555 6" L=7' S=0.00% INV IN -0.25 INV OUT -0.25
LINE P-89 15" RCP L=8' S=2.43% INV IN 104.95 INV OUT 104.75	LINE P-119 12" L=14' S=21.44% INV IN 113.00 INV OUT 110.00	LINE P-208 15" RCP L=101' S=0.50% INV IN 105.16 INV OUT 104.65	LINE P-305 12" RCP L=80' S=0.50% INV IN 107.78 INV OUT 107.38	LINE P-403 12" L=131' S=1.14% INV IN 109.00 INV OUT 107.50	LINE P-507 12" L=22' S=0.52% INV IN 108.93 INV OUT 108.82	LINE P-556 3" L=7' S=1130.64% INV IN -0.12 INV OUT 83.24
LINE P-90 12" RCP L=6' S=0.54% INV IN 104.95 INV OUT 104.92	LINE P-120 12" L=13' S=1.55% INV IN 113.00 INV OUT 112.80	LINE P-209 12" L=63' S=0.50% INV IN 104.36 INV OUT 104.05	LINE P-306 12" RCP L=140' S=0.50% INV IN 107.38 INV OUT 106.68	LINE P-404 12" L=28' S=2.86% INV IN 110.00 INV OUT 109.20	LINE P-508 18" L=301' S=0.98% INV IN 108.34 INV OUT 105.40	LINE P-600 24" L=225' S=2.03% INV IN 108.50 INV OUT 103.93
LINE P-91 12" RCP L=5' S=0.93% INV IN 104.65 INV OUT 104.60	LINE P-122 12" L=15' S=6.62% INV IN 109.00 INV OUT 108.00	LINE P-210 12" RCP L=7' S=0.59% INV IN 103.84 INV OUT 103.80	LINE P-307 12" L=54' S=1.93% INV IN 106.00 INV OUT 104.95	LINE P-405 12" L=13' S=3.88% INV IN 108.00 INV OUT 107.50	LINE P-508a 10" L=13' S=18.89% INV IN 113.00 INV OUT 110.50	LINE P-601 24" L=351' S=1.00% INV IN 103.73 INV OUT 100.22
LINE P-92 12" RCP L=8' S=0.65% INV IN 104.90 INV OUT 104.85	LINE P-126 12" L=55' S=0.50% INV IN 106.68 INV OUT 106.40	LINE P-211 12" L=87' S=0.63% INV IN 107.86 INV OUT 107.31	LINE P-308 12" L=24' S=0.83% INV IN 106.20 INV OUT 106.00	LINE P-501 12" L=17' S=4.49% INV IN 112.00 INV OUT 111.25	LINE P-509 (1) (1) 12" L=77' S=0.52% INV IN 110.00 INV OUT 109.60	LINE P-602 24" L=112' S=1.00% INV IN 100.12 INV OUT 99.00
LINE P-93 12" RCP L=8' S=0.65% INV IN 104.90 INV OUT 104.85	LINE P-127 18" L=45' S=6.60% INV IN 104.00 INV OUT 101.00	LINE P-212 12" L=127' S=0.50% INV IN 108.50 INV OUT 107.86	LINE P-309 12" L=109' S=0.50% INV IN 111.25 INV OUT 110.70	LINE P-502 (1) 12" L=19' S=0.50% INV IN 110.12 INV OUT 110.02	LINE P-509 (1) 12" L=42' S=0.52% INV IN 110.22 INV OUT 110.00	LINE P-603 24" L=30' S=1.00% INV IN 98.80 INV OUT 98.50
LINE P-94 12" RCP L=8' S=0.64% INV IN 104.75 INV OUT 104.70	LINE P-128 12" L=16' S=0.50% INV IN 108.58 INV OUT 108.50	LINE P-213 12" RCP L=27' S=0.70% INV IN 108.69 INV OUT 108.50	LINE P-311 (1) 15" RCP L=95' S=0.50% INV IN 109.45 INV OUT 108.97	LINE P-502 12" L=12' S=0.51% INV IN 110.18 INV OUT 110.12	LINE P-509 18" L=48' S=0.83% INV IN 105.20 INV OUT 104.80	
LINE P-95 12" RCP L=7' S=0.68% INV IN 103.80 INV OUT 103.75	LINE P-129 24" L=86' S=4.67% INV IN 108.50 INV OUT 104.50	LINE P-214 12" RCP L=9' S=0.89% INV IN 108.77 INV OUT 108.69	LINE P-311 15" RCP L=112' S=0.50% INV IN 110.01 INV OUT 109.45	LINE P-502a 12" L=9' S=20.35% INV IN 112.00 INV OUT 110.12	LINE P-509a 12" L=48' S=0.58% INV IN 110.50 INV OUT 110.22	
LINE P-96 12" RCP L=6' S=0.91% INV IN 103.75 INV OUT 103.70	LINE P-200 12" L=106' S=0.85% INV IN 108.00 INV OUT 107.10	LINE P-215 12" RCP L=9' S=0.58% INV IN 103.85 INV OUT 103.80	LINE P-312 15" RCP L=105' S=0.50% INV IN 106.27 INV OUT 105.75	LINE P-503 12" L=50' S=0.51% INV IN 110.02 INV OUT 109.77	LINE P-511 18" L=42' S=4.14% INV IN 100.75 INV OUT 99.00	
LINE P-97 12" RCP L=9' S=0.57% INV IN 103.70 INV OUT 103.65	LINE P-201 12" L=136' S=0.74% INV IN 107.10 INV OUT 106.10	LINE P-216 24" RCP L=15' S=0.00% INV IN 100.50 INV OUT 100.50	LINE P-313 15" RCP L=110' S=0.50% INV IN 105.75 INV OUT 105.20	LINE P-503a 12" L=15' S=14.81% INV IN 112.00 INV OUT 109.77	LINE P-512 18" L=13' S=7.57% INV IN 99.00 INV OUT 98.00	
LINE P-100 12" L=23' S=0.50% INV IN 110.83 INV OUT 110.72	LINE P-202 12" L=162' S=0.68% INV IN 106.10 INV OUT 105.00	LINE P-217 24" RCP L=51' S=3.02% INV IN 101.50 INV OUT 99.95	LINE P-316 12" L=24' S=0.82% INV IN 108.20 INV OUT 108.00	LINE P-504 12" L=61' S=0.52% INV IN 109.77 INV OUT 109.45	LINE P-550 6" L=29' S=0.40% INV IN 112.50 INV OUT 112.38	
LINE P-101 30" L=136' S=1.00% INV IN 101.36 INV OUT 100.00	LINE P-203 12" L=78' S=4.00% INV IN 108.00 INV OUT 104.90	LINE P-218 15" RCP L=42' S=0.50% INV IN 104.05 INV OUT 103.84	LINE P-317 12" L=71' S=0.56% INV IN 107.80 INV OUT 107.40	LINE P-504a 12" L=15' S=17.27% INV IN 112.00 INV OUT 109.45	LINE P-551 8" L=256' S=0.68% INV IN 111.16 INV OUT 109.43	
LINE P-102 48" L=170' S=0.50% INV IN 99.95 INV OUT 99.10	LINE P-204 12" RCP L=27' S=0.75% INV IN 104.70 INV OUT 104.50	LINE P-300 12" L=170' S=0.50% INV IN 110.32 INV OUT 109.47	LINE P-319 15" RCP L=14' S=0.72% INV IN 104.60 INV OUT 104.50	LINE P-505 12" L=46' S=0.52% INV IN 109.45 INV OUT 109.21	LINE P-552 8" L=155' S=3.34% INV IN 109.35 INV OUT 104.17	
LINE P-103 48" L=18' S=8.30% INV IN 98.50 INV OUT 97.00	LINE P-205 15" RCP L=52' S=0.50% INV IN 105.41 INV OUT 105.15	LINE P-301 12" RCP L=109' S=0.50% INV IN 109.47 INV OUT 108.92	LINE P-400 12" L=28' S=1.07% INV IN 116.00 INV OUT 115.70	LINE P-505a 12" L=15' S=19.21% INV IN 112.00 INV OUT 109.21	LINE P-553 8" L=26' S=1.42% INV IN 108.98 INV OUT 109.35	

FOR PERMITTING PURPOSES ONLY
NOT RELEASED FOR CONSTRUCTION

Architecture
Engineering
Environmental
Land Surveying

BL Companies

100 Constitution Plaza, 10th Floor
Hartford, CT 06103
(860) 249-2200
(860) 249-2400 Fax

STATE OF CONNECTICUT
MICHELLE M. CARLSON
No.20951
LICENSED
PROFESSIONAL ENGINEER

PROPOSED DEVELOPMENT
EVERGREEN WALK - UNIT 12
151 BUCKLAND ROAD
SOUTH WINDSOR, CONNECTICUT

REVISIONS

No.	Date	Desc.
1	01/06/2020	DRAINAGE MODIFICATION
2	09/14/2020	PLANNING AND ZONING SUBMISSION
3	10/20/2020	RESPONSE TO COMMENTS

Designed	J.A.B.
Drawn	S.E.L.
Reviewed	
Scale	NTS
Project No.	13C4718
Date	09/18/2019

CAD File:
GD13C471801

Title
GRADING AND DRAINAGE PLAN

Sheet No.
GD-3

Xref (5) : BD13C471801 , X213C471803 , XC02 , XC01 , XC13C471803 , XY13C471801 , XO13C471801 stamperchase

10/20/2020, MKEGABS, G:\JOBS13\13C\13C4718\DWG\GD\3C471801.DWG,GD-3 24X36 ARCH

© 2020 BL COMPANIES, INC. THESE DRAWINGS SHALL NOT BE UTILIZED BY ANY PERSON, FIRM OR CORPORATION WITHOUT THE SPECIFIC WRITTEN PERMISSION OF BL COMPANIES.

SITE UTILITIES LEGEND

	PROPERTY LINE
LOD	LIMIT OF DISTURBANCE AND SITEWORK CONTRACK LIMIT LINE
	SAWCUT LINE
E E	ELECTRIC LINE
G G	GAS LINE
W W	WATER LINE
S S	SANITARY SEWER LINE
T T	TELECOMMUNICATIONS LINE
ETC	ELECTRIC AND TELECOMMUNICATIONS LINE
	STORM LINE

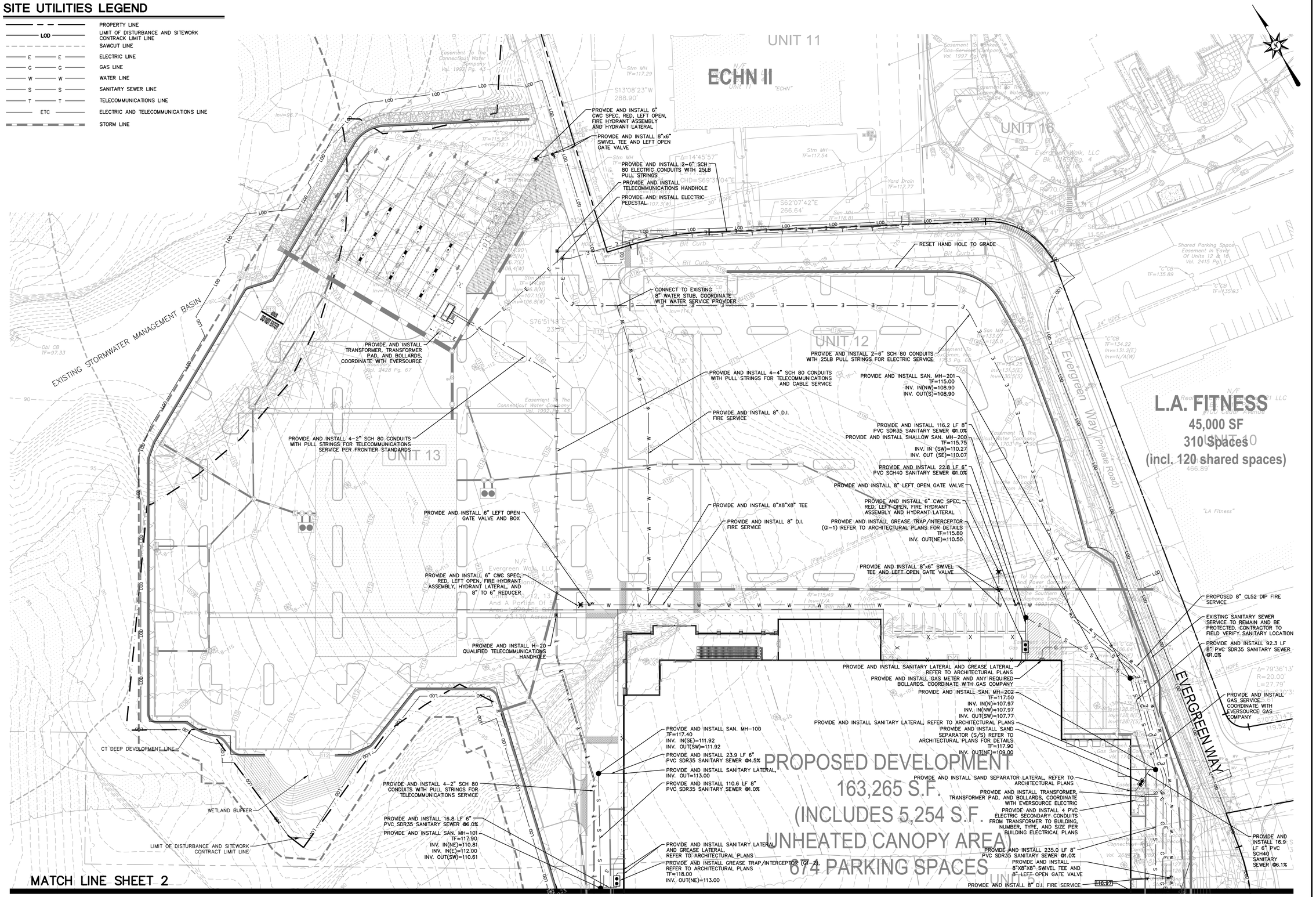

FOR PERMITTING PURPOSES ONLY
NOT RELEASED FOR CONSTRUCTION

GRAPHIC SCALE
40 20 0 40
SCALE IN FEET

Architecture Engineering Environmental Land Surveying
BL Companies
100 Constitution Plaza, 10th Floor
Hartford, CT 06103
(860) 249-2200
(860) 249-2400 Fax

STATE OF CONNECTICUT MICHELLE M. CARLSON No.20951 LICENSED PROFESSIONAL ENGINEER

PROPOSED DEVELOPMENT
EVERGREEN WALK - UNIT 12
151 BUCKLAND ROAD
SOUTH WINDSOR, CONNECTICUT

REVISIONS

No.	Date	Desc.
1	01/06/2020	DRAINAGE MODIFICATION
2	08/14/2020	PLANNING AND ZONING SUBMISSION
3	10/20/2020	RESPONSE TO COMMENTS

Designed	J.A.B.
Drawn	S.E.L.
Reviewed	
Scale	1"=40'
Project No.	13C4718
Date	09/18/2019
CAD File:	SU13C471801

Title
SITE UTILITY PLAN

Sheet No.
SU-1

Xref (s): B013C471801; XC13C471803; XT13C471802; XC13C471804; XY13C471801; XC13C471801-Hydrochase

10/20/2020, EMA GARS, G:\JOBS\13\13C\13C471801\DWGS\13C471801.DWG-SU-1-FAREA.WSC.

© 2020 BL COMPANIES, INC. THESE DRAWINGS SHALL NOT BE UTILIZED BY ANY PERSON, FIRM OR CORPORATION WITHOUT THE SPECIFIC WRITTEN PERMISSION OF BL COMPANIES.

SITE UTILITIES LEGEND

	PROPERTY LINE
LOD	LIMIT OF DISTURBANCE AND SITEWORK CONTRACK LIMIT LINE
	SAWCUT LINE
E E	ELECTRIC LINE
G G	GAS LINE
W W	WATER LINE
S S	SANITARY SEWER LINE
T T	TELECOMMUNICATIONS LINE
ETC	ELECTRIC AND TELECOMMUNICATIONS LINE
	STORM LINE

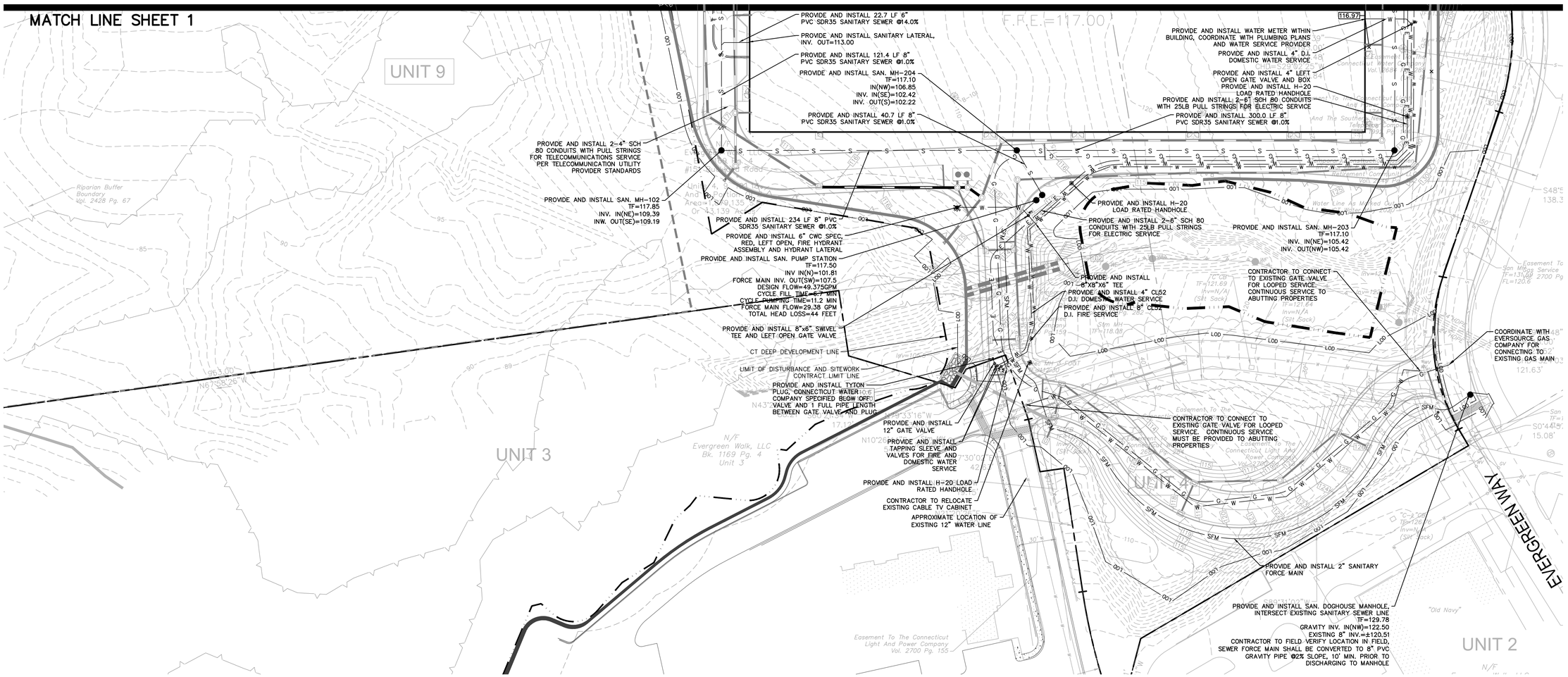

FOR PERMITTING PURPOSES ONLY
NOT RELEASED FOR CONSTRUCTION

GRAPHIC SCALE
40 20 0 40
SCALE IN FEET

Architecture
Engineering
Environmental
Land Surveying

BL Companies

100 Constitution Plaza, 10th Floor
Hartford, CT 06103
(860) 249-2200
(860) 249-2400 Fax

STATE OF CONNECTICUT
MICHELLE M. CARLSON
No.20951
LICENSED
PROFESSIONAL ENGINEER

PROPOSED DEVELOPMENT

EVERGREEN WALK - UNIT 12
151 BUCKLAND ROAD
SOUTH WINDSOR, CONNECTICUT

REVISIONS		
No.	Date	Desc.
1	01/06/2020	DRAINAGE MODIFICATION
2	08/14/2020	PLANNING AND ZONING SUBMISSION
3	10/20/2020	RESPONSE TO COMMENTS

Designed	J.A.B.
Drawn	S.E.L.
Reviewed	
Scale	1"=40'
Project No.	13C4718
Date	09/18/2019
CAD File: SU13C471801	

Title
SITE UTILITY PLAN AND NOTES

Sheet No.
SU-2

Xref (s) : BD13C471801 ; XC13C471801 ; XZ13C471803 ; XC13C471802 ; XC13C471804 ; XY13C471801 ; XO13C471801-Hydrochose

10/20/2020, KKLEVGIS, G:\JOBS\13C\13C471801\WIP\SU13C471801.DWG-SU-2 24X36.40BC

© 2020 BL COMPANIES, INC. THESE DRAWINGS SHALL NOT BE UTILIZED BY ANY PERSON, FIRM OR CORPORATION WITHOUT THE SPECIFIC WRITTEN PERMISSION OF BL COMPANIES.

EROSION CONTROL LEGEND

- PROPERTY LINE
- LOD — LIMIT OF DISTURBANCE AND SITEWORK CONTRACK LIMIT LINE
- SAWCUT LINE
- SF — SILT FENCE
- SILT SACK INLET PROTECTION
- EROSION CONTROL BLANKET
- TEMPORARY MATERIAL STOCKPILE
- CONCRETE WASH PIT
- CONSTRUCTION ENTRANCE
- TEMPORARY DIVERSION SWALE
- STONE CHECK DAM
- STRAW BALE BARRIER

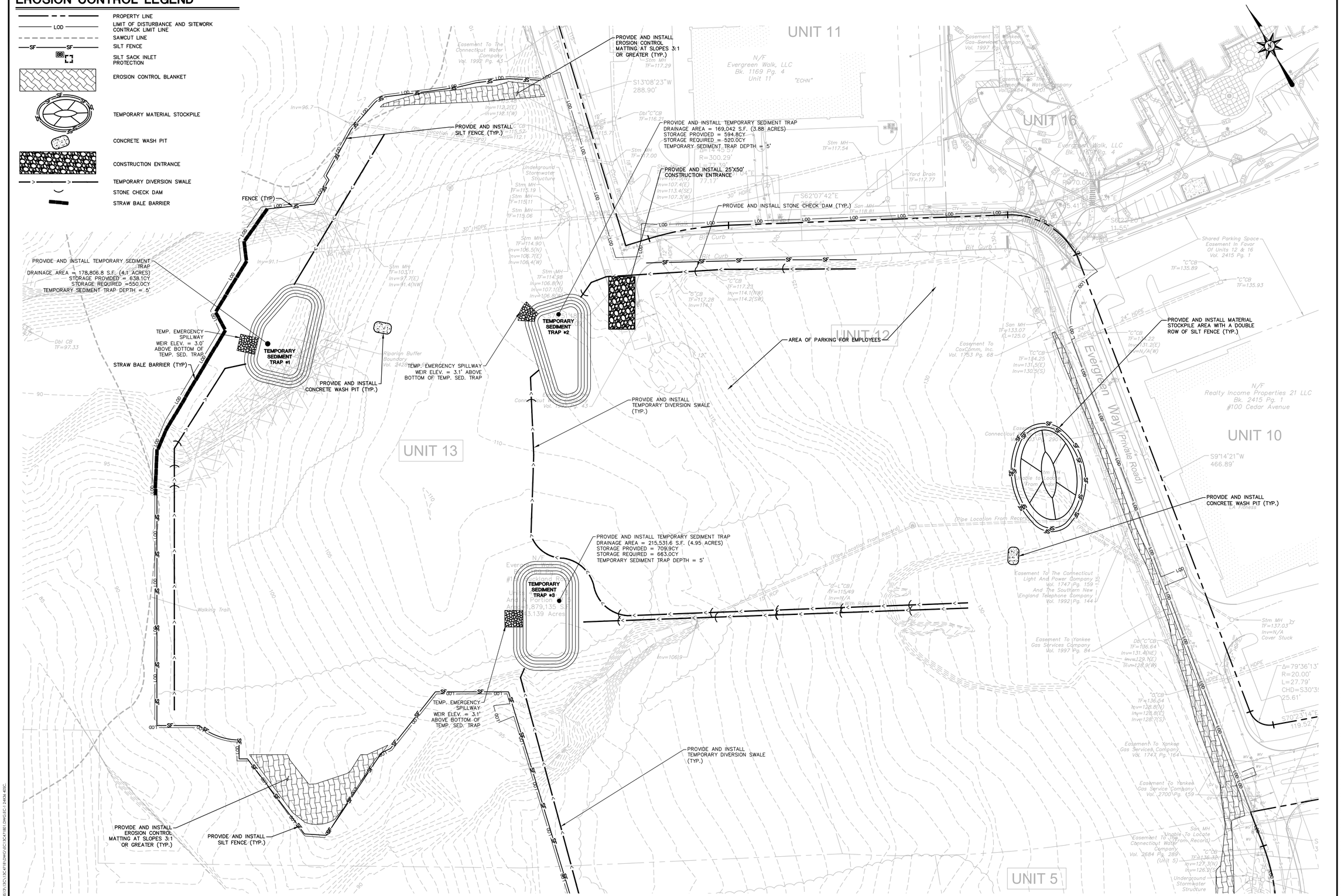

REFER TO SHEET EC-3 FOR EROSION AND SEDIMENT CONTROL NOTES

FOR PERMITTING PURPOSES ONLY NOT RELEASED FOR CONSTRUCTION

GRAPHIC SCALE
40 20 0 40
SCALE IN FEET

© 2020 BL COMPANIES, INC. THESE DRAWINGS SHALL NOT BE UTILIZED BY ANY PERSON, FIRM OR CORPORATION WITHOUT THE SPECIFIC WRITTEN PERMISSION OF BL COMPANIES.

10/20/2020, KRLEGUS, G:\JOBS13\13C\13C4718\DWG\EC\13C4718D.DWG\EC-1 24X36 40SC

Architecture
Engineering
Environmental
Land Surveying
BL Companies
100 Constitution Plaza, 10th Floor
Hartford, CT 06103
(860) 249-2260
(860) 249-2400 Fax

STATE OF CONNECTICUT MICHELLE M. CARLSON No.20951 LICENSED PROFESSIONAL ENGINEER

PROPOSED DEVELOPMENT
EVERGREEN WALK - UNIT 12
151 BUCKLAND ROAD
SOUTH WINDSOR, CONNECTICUT

Desc: DRAINAGE MODIFICATION PLANNING AND ZONING SUBMISSION RESPONSE TO COMMENTS

REVISIONS

No.	Date	Desc.
1	07/17/2020	
2	08/14/2020	
3	10/20/2020	

Designed	J.A.B.
Drawn	S.E.L.
Reviewed	
Scale	1"=40'
Project No.	13C4718
Date	09/18/2019
CAD File: EC13C471801	

Title
SEDIMENT AND EROSION CONTROL PLAN

Sheet No.
EC-1

Xref (s): BD13C471801 ; XC13C471801 ; XI13C471801 ; XO13C471802 ; XC13C471803 ; XC13C471805 ; XC13C471802 ; XC13C471801 ; XO13C471801 ; Hydrochoice

EROSION CONTROL LEGEND

- PROPERTY LINE
- LOD — LIMIT OF DISTURBANCE AND SITEWORK CONTRACK LIMIT LINE
- SAWCUT LINE
- SF — SILT FENCE
- SILT SACK INLET PROTECTION
- EROSION CONTROL BLANKET
- TEMPORARY MATERIAL STOCKPILE
- CONCRETE WASH PIT
- CONSTRUCTION ENTRANCE
- TEMPORARY DIVERSION SWALE
- STONE CHECK DAM
- STRAW BALE BARRIER

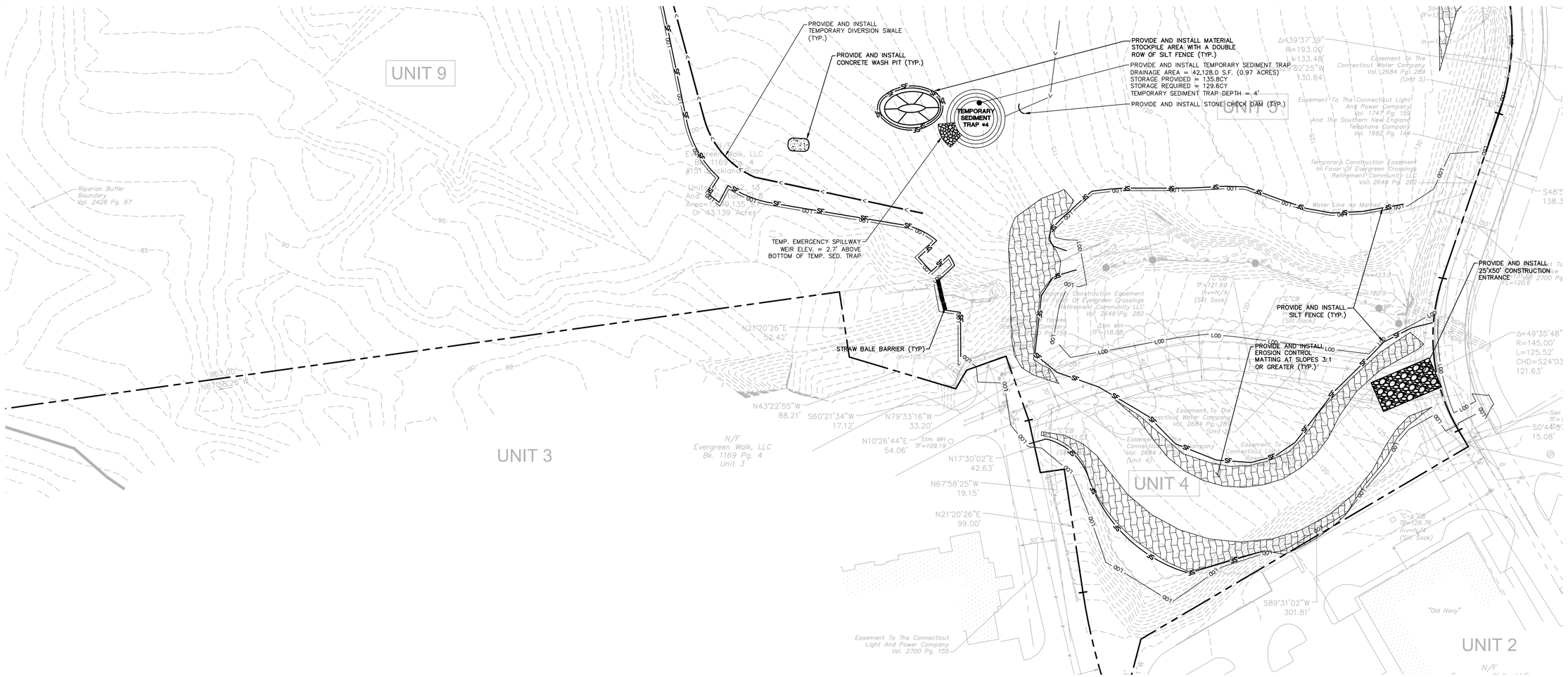

REFER TO SHEET EC-3 FOR EROSION AND SEDIMENT CONTROL NOTES

FOR PERMITTING PURPOSES ONLY
NOT RELEASED FOR CONSTRUCTION

GRAPHIC SCALE
40 20 0 40
SCALE IN FEET

Architecture
Engineering
Environmental
Land Surveying
BL Companies
100 Constitution Plaza, 10th Floor
Hartford, CT 06103
(860) 249-2200
(860) 249-2400 Fax

STATE OF CONNECTICUT
MICHELLE M. CARLSON
No.20951
LICENSED
PROFESSIONAL ENGINEER

PROPOSED DEVELOPMENT
EVERGREEN WALK - UNIT 12
151 BUCKLAND ROAD
SOUTH WINDSOR, CONNECTICUT

REVISIONS

No.	Date	Desc.
1	07/14/2020	DRAINAGE MODIFICATION
2	08/14/2020	PLANNING AND ZONING SUBMISSION
3	10/20/2020	RESPONSE TO COMMENTS

Designed	J.A.B.
Drawn	S.E.L.
Reviewed	
Scale	1"=40'
Project No.	13C4718
Date	09/18/2019
CAD File: EC13C471801	

Title
SEDIMENT AND EROSION CONTROL PLAN

Sheet No.
EC-2

Xref (s) : BD13C471801 ; XC13C471801 ; XZ13C471801 ; XC13C471805 ; XC13C471802 ; XC13C471803 ; XY13C471801 ; XO13C471801-Hatchecheck

10/20/2020, KRISCUSS, G:\JOBS\13\13C\13C4718\DWG\EC13C471801.DWG-EC-2 2400x 405C

© 2020 BL COMPANIES, INC. THESE DRAWINGS SHALL NOT BE UTILIZED BY ANY PERSON, FIRM OR CORPORATION WITHOUT THE SPECIFIC WRITTEN PERMISSION OF BL COMPANIES.

EROSION CONTROL LEGEND

- PROPERTY LINE
- LOD — LIMIT OF DISTURBANCE AND SITEWORK CONTRACK LIMIT LINE
- SAWCUT LINE
- SF — SILT FENCE
- SILT SACK INLET PROTECTION
- EROSION CONTROL BLANKET
- TEMPORARY MATERIAL STOCKPILE
- CONCRETE WASH PIT
- CONSTRUCTION ENTRANCE
- TEMPORARY DIVERSION SWALE
- STONE CHECK DAM
- STRAW BALE BARRIER

NOTE: PHASE 2 ASSUMES PROPOSED IMPERVIOUS AREAS ARE COVERED WITH A NON-ERODABLE SURFACE COVER AND CATCH BASIN GRATES ARE A MINIMUM OF 2" ABOVE THE CURRENT GRADE.

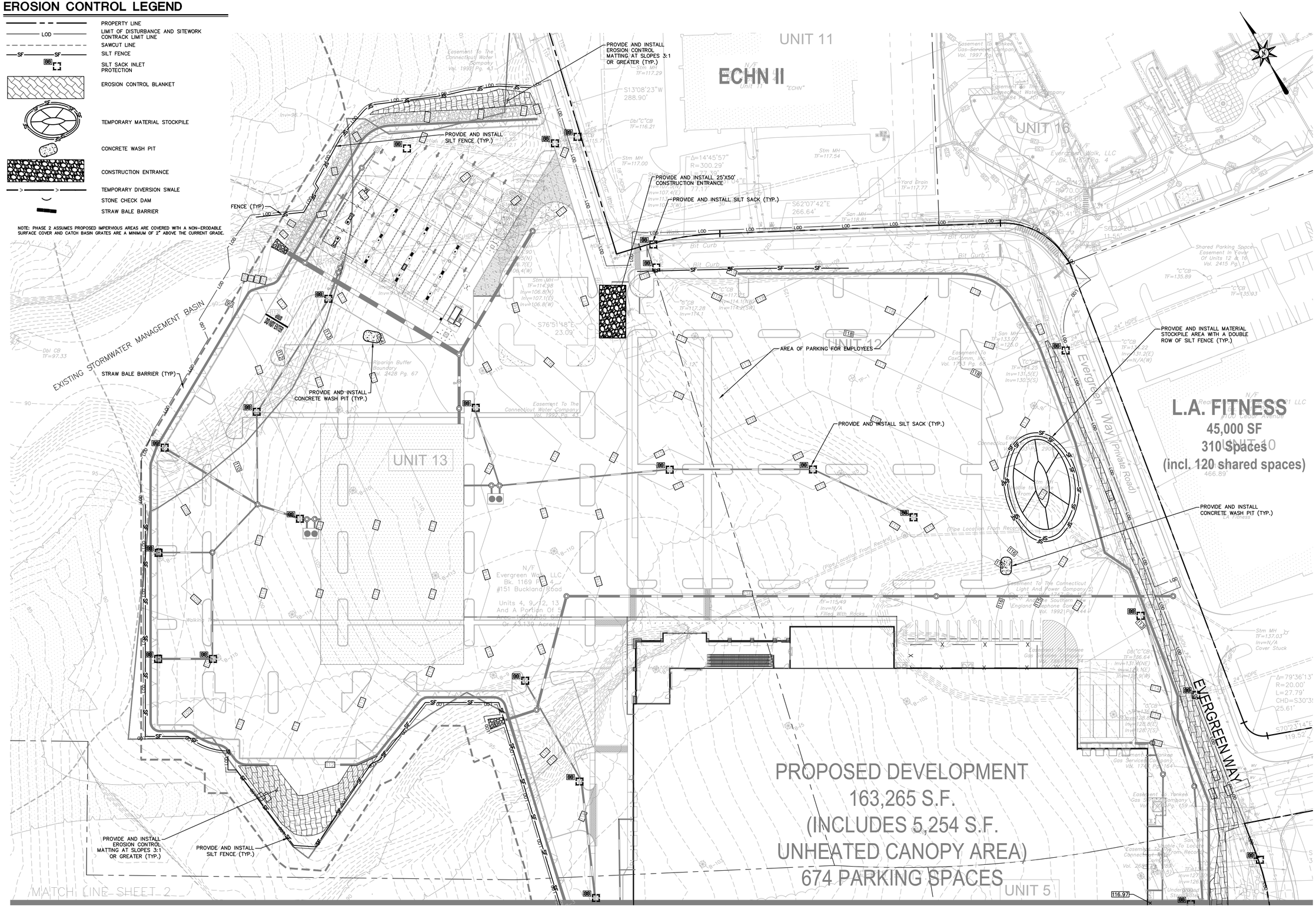

REFER TO SHEET EC-3 FOR EROSION AND SEDIMENT CONTROL NOTES

FOR PERMITTING PURPOSES ONLY
NOT RELEASED FOR CONSTRUCTION

GRAPHIC SCALE
40 20 0 40
SCALE IN FEET

Architecture
Engineering
Environmental
Land Surveying
BL Companies

100 Constitution Plaza, 10th Floor
Hartford, CT 06103
(860) 249-2200
(860) 249-2400 Fax

STATE OF CONNECTICUT
MICHELLE M. CARSON
No.20951
LICENSED PROFESSIONAL ENGINEER

PROPOSED DEVELOPMENT
EVERGREEN WALK - UNIT 12
151 BUCKLAND ROAD
SOUTH WINDSOR, CONNECTICUT

REVISIONS

No.	Date	Desc.
1	07/14/2020	DRAINAGE MODIFICATION
2	08/14/2020	PLANNING AND ZONING SUBMISSION
3	10/20/2020	RESPONSE TO COMMENTS

Designed	J.A.B.
Drawn	S.E.L.
Reviewed	
Scale	1"=40'
Project No.	13C4718
Date	09/18/2019

CAD File: EC13C471801

Title
SEDIMENT AND EROSION CONTROL PLAN (PHASE 2)

Sheet No.
EC-3

Xref (s): BD13C471801 ; XC13C471801 ; XZ13C471803 ; XC13C471805 ; XC13C471802 ; XY13C471801 ; XO13C471801 Hatbatchate

11/20/2020, KRJGOSS, G:\JOBS\13\13C\13C4718\DWG\EC13C471801.DWG,EC-3 24X36 40SC

© 2020 BL COMPANIES, INC. THESE DRAWINGS SHALL NOT BE UTILIZED BY ANY PERSON, FIRM OR CORPORATION WITHOUT THE SPECIFIC WRITTEN PERMISSION OF BL COMPANIES.

EROSION CONTROL LEGEND

- PROPERTY LINE
- LOD — LIMIT OF DISTURBANCE AND SITEWORK CONTRACK LIMIT LINE
- SAWCUT LINE
- SF — SILT FENCE
- SILT SACK INLET PROTECTION
- EROSION CONTROL BLANKET
- TEMPORARY MATERIAL STOCKPILE
- CONCRETE WASH PIT
- CONSTRUCTION ENTRANCE
- TEMPORARY DIVERSION SWALE
- STONE CHECK DAM
- STRAW BALE BARRIER

NOTE: PHASE 2 ASSUMES PROPOSED IMPERVIOUS AREAS ARE COVERED WITH A NON-ERODABLE SURFACE COVER AND CATCH BASIN GRATES ARE A MINIMUM OF 2" ABOVE THE CURRENT GRADE.

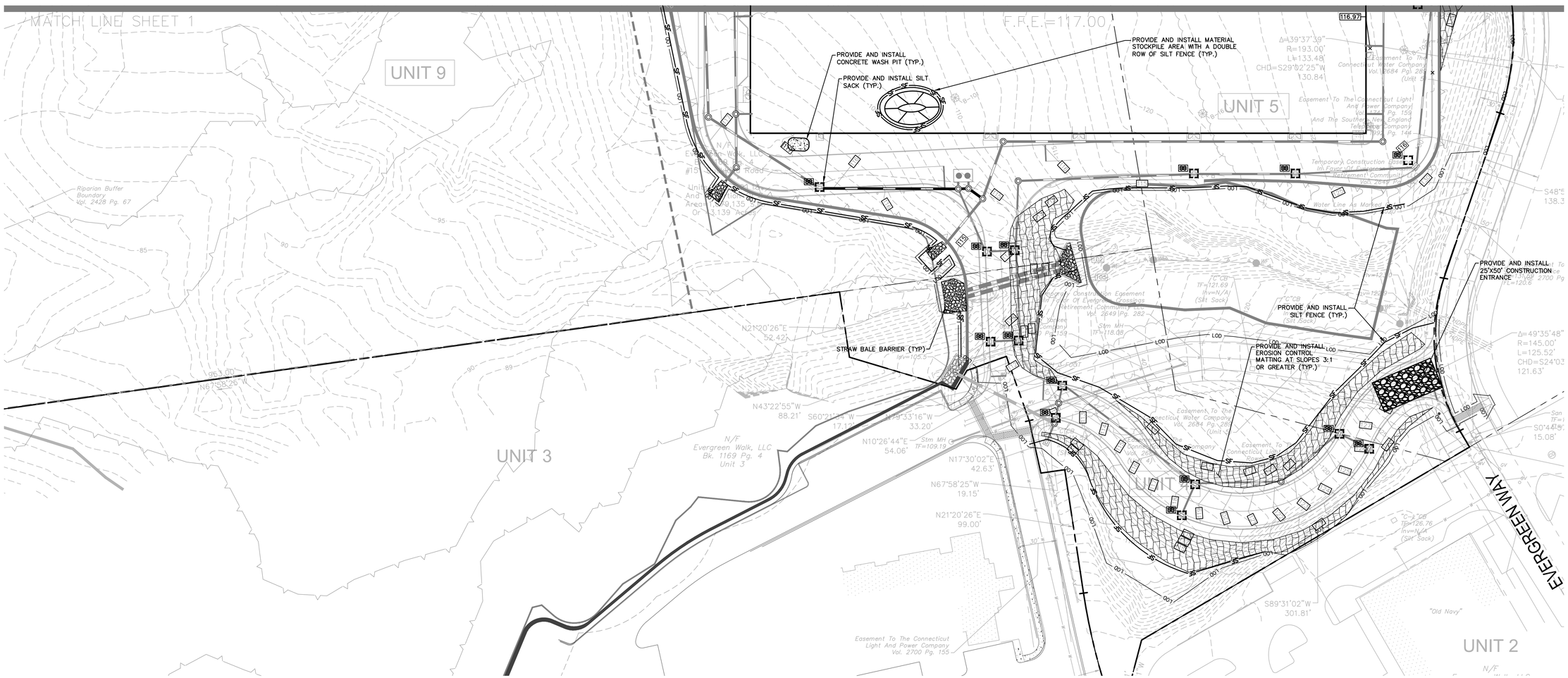

REFER TO SHEET EC-3 FOR EROSION AND SEDIMENT CONTROL NOTES

FOR PERMITTING PURPOSES ONLY
NOT RELEASED FOR CONSTRUCTION

GRAPHIC SCALE
40 20 0 40
SCALE IN FEET

Architecture
Engineering
Environmental
Land Surveying
BL Companies

100 Constitution Plaza, 10th Floor
Hartford, CT 06103
(860) 249-2200
(860) 249-2400 Fax

STATE OF CONNECTICUT
MICHELLE M. CARLSON
No. 20951
LICENSED PROFESSIONAL ENGINEER

PROPOSED DEVELOPMENT
EVERGREEN WALK - UNIT 12
151 BUCKLAND ROAD
SOUTH WINDSOR, CONNECTICUT

REVISIONS

No.	Date	Desc.
1	06/04/2020	DRAINAGE MODIFICATION
2	08/14/2020	PLANNING AND ZONING SUBMISSION
3	10/20/2020	RESPONSE TO COMMENTS

Designed	J.A.B.
Drawn	S.E.L.
Reviewed	
Scale	1"=40'
Project No.	13C4718
Date	09/18/2019

CAD File: EC13C471801

Title
SEDIMENT AND EROSION CONTROL PLAN (PHASE 2)

Sheet No.
EC-4

Xref's: BD13C471801 ; XC13C471801 ; XT13C471803 ; XC13C471805 ; XC13C471802 ; XC13C471803 ; XY13C471801 ; XC13C471801 Hatbacchase

10/20/2020, KRISCUSS, G:\K2RESTN\13C\13C4718\DWG\EC\13C471801.DWG EC-4 24X36 40SC

© 2020 BL COMPANIES, INC. THESE DRAWINGS SHALL NOT BE UTILIZED BY ANY PERSON, FIRM OR CORPORATION WITHOUT THE SPECIFIC WRITTEN PERMISSION OF BL COMPANIES.

SEDIMENT AND EROSION CONTROL NOTES

SEDIMENT & EROSION CONTROL NARRATIVE
THE SEDIMENT AND EROSION CONTROL PLAN WAS DEVELOPED TO PROTECT THE EXISTING ROADWAY AND STORM DRAINAGE SYSTEMS, ADJACENT PROPERTIES, AND ANY ADJACENT WETLAND AREA AND ANY ADJACENT WATER COURSE FROM SEDIMENT LADEN SURFACE RUNOFF AND EROSION. A CONSTRUCTION SEQUENCE IS PROVIDED TO PROVIDE SURFACE RUNOFF EROSION CONTROLS PRIOR TO THE BEGINNING OF PROJECT DEMOLITION AND/OR CONSTRUCTION.

CONSTRUCTION SCHEDULE
THE ANTICIPATED STARTING DATE FOR CONSTRUCTION IS WINTER 2019 WITH COMPLETION SPRING 2021. APPROPRIATE SEDIMENT AND EROSION CONTROL MEASURES AS DESCRIBED HEREIN SHALL BE INSTALLED BY THE CONTRACTOR PRIOR TO THE COMMENCEMENT OF ALL DEMOLITION OR CONSTRUCTION ACTIVITY. SCHEDULE WORK TO MINIMIZE THE LENGTH OF TIME THAT BARE SOIL WILL BE EXPOSED.

CONTINGENCY EROSION PLAN
THE CONTRACTOR SHALL INSTALL ALL SPECIFIED SEDIMENT AND EROSION CONTROL MEASURES AND WILL BE REQUIRED TO MAINTAIN THEM IN THEIR INTENDED FUNCTIONING CONDITION. THE AGENTS OF THE MUNICIPALITY AND/OR INLAND WETLANDS AGENCY/CONSERVATION COMMISSION AND/OR CIVIL ENGINEER SHALL HAVE THE AUTHORITY TO REQUIRE SUPPLEMENTAL MAINTENANCE OR ADDITIONAL MEASURES IF FIELD CONDITIONS ARE ENCOUNTERED BEYOND WHAT WOULD NORMALLY BE ANTICIPATED.

CONSTRUCTION SEQUENCE
THE FOLLOWING CONSTRUCTION SEQUENCE IS RECOMMENDED:
1. CONTACT MUNICIPALITY AND/OR INLAND WETLANDS AGENCY/CONSERVATION COMMISSION AGENT AT LEAST FORTY-EIGHT (48) HOURS PRIOR TO COMMENCEMENT OF ANY DEMOLITION, CONSTRUCTION OR REGULATED ACTIVITY ON THIS PROJECT.

2. CLEARING LIMITS SHALL BE PHYSICALLY MARKED IN THE FIELD AND APPROVED BY THE MUNICIPALITY AND/OR INLAND WETLANDS AGENCY/CONSERVATION COMMISSION AGENT PRIOR TO THE START OF WORK ON THE SITE. INSTALL TREE PROTECTION AND PERIMETER SILT FENCE.

3. CONSTRUCT STONE CONSTRUCTION ENTRANCE ANTI-TRACKING PADS AT CONSTRUCTION ENTRANCES/EXITS AND INSTALL FILTER FABRIC AROUND GRATES OF CATCH BASINS OR INSTALL SILT SACKS ON CATCH BASIN INLETS ON OFF SITE ROADS. INSTALL SILT FENCE AND OTHER EROSION CONTROL DEVICES INDICATED ON THESE PLANS AT PERIMETER OF PROPOSED SITE DISTURBANCE AND INSTALL ALL EROSION CONTROL MEASURES AND TREE PROTECTION INDICATED ON THESE PLANS. INSTALL SEDIMENT BASINS AND SEDIMENT TRAPS IF REQUIRED AT LOW AREAS OF SITE OR AS ORDERED BY THE ENGINEER OR AS SHOWN ON THESE PLANS.

4. CLEAR AND GRUB SITE. STOCKPILE CHIPS. STOCKPILE TOPSOIL. INSTALL SEDIMENT AND EROSION CONTROLS AT STOCKPILES.

5. SITE DEMOLITION AND REMOVAL.

6. INSTALL SILT FENCE, CONSTRUCT DIVERSION SWALES AND SEDIMENT TRAPS. COMMENCE INSTALLATION OF STORM DRAINAGE SYSTEM.

7. COMMENCE EARTHWORK. CONSTRUCT FILL SLOPE AND RETAINING WALLS. INSTALL ADDITIONAL SEDIMENT AND EROSION CONTROLS AS WORK PROGRESSES AND CONTINUE STORM DRAINAGE SYSTEM CONSTRUCTION, TOPSOIL AND SEED SLOPES WHICH HAVE ACHIEVED FINAL SITE GRADING.

8. CONSTRUCTION STAKING OF ALL BUILDING CORNERS, UTILITIES, ACCESS DRIVES, AND PARKING AREAS.

9. ROUGH GRADING AND FILLING OF SUBGRADES AND SLOPES.

10. IMMEDIATELY UPON DISCOVERING UNFORESEEN CIRCUMSTANCES POSING THE POTENTIAL FOR ACCELERATED EROSION AND/OR SEDIMENT POLLUTION, THE OPERATOR SHALL IMPLEMENT APPROPRIATE BEST MANAGEMENT PRACTICES TO ELIMINATE THE POTENTIAL FOR ACCELERATED EROSION AND/OR SEDIMENT POLLUTION.

11. BEFORE DISPOSING OF SOIL OR RECEIVING BORROW FOR THE SITE, THE CONTRACTOR MUST PROVIDE EVIDENCE THAT EACH SPOIL OR BORROW AREA HAS A SEDIMENT AND EROSION CONTROL PLAN APPROVED BY THE MUNICIPALITY AND/OR INLAND WETLANDS AGENCY/CONSERVATION COMMISSION AND WHICH IS BEING IMPLEMENTED AND MAINTAINED. THE CONTRACTOR SHALL ALSO NOTIFY THE MUNICIPALITY AND/OR INLAND WETLANDS AGENCY/CONSERVATION COMMISSION IN WRITING OF ALL RECEIVING SPOIL AND BORROW AREAS WHEN THEY HAVE BEEN IDENTIFIED.

12. CONTINUE INSTALLATION OF STORM DRAINAGE AS SUBGRADE ELEVATIONS ARE ACHIEVED.

13. BUILDING FOUNDATION SUBGRADE AND PAD SUBGRADE PREPARATION.

14. BUILDING FOUNDATION CONSTRUCTION. BEGIN BUILDING SUPERSTRUCTURE

15. THROUGHOUT CONSTRUCTION SEQUENCE, REMOVE SEDIMENT FROM BEHIND SILT FENCES, HAY BALES AND OTHER EROSION CONTROL DEVICES, AND FROM SEDIMENT BASINS AND SEDIMENT TRAPS AS REQUIRED. REMOVAL SHALL BE ON A PERIODIC BASIS (EVERY SIGNIFICANT RAINFALL OF 0.25 INCH OR GREATER). INSPECTION OF SEDIMENT AND EROSION CONTROL MEASURES SHALL BE ON A WEEKLY BASIS AND AFTER EACH RAINFALL OF 0.25 INCHES OR GREATER. SEDIMENT COLLECTED SHALL BE DEPOSITED AND SPREAD EVENLY UPLAND ON SLOPES DURING CONSTRUCTION.

16. INSTALL SANITARY LATERAL AND UTILITIES. COMPLETE STORM DRAINAGE SYSTEM.

17. INSTALL SITE LIGHTING.

18. COMPLETE GRADING TO SUBGRADES AND CONSTRUCT PARKING AREA SUBGRADE.

19. CONSTRUCT CURBS, PAVEMENT STRUCTURE AND SIDEWALKS.

20. CONDUCT FINE GRADING.

21. CONSTRUCT OFF SITE ROADWAY IMPROVEMENTS.

22. PAVING OF PARKING AREAS AND DRIVEWAYS

23. FINAL FINE GRADING OF SLOPE AND NON-PAVED AREAS.

24. PLACE 4" TOPSOIL ON SLOPES AFTER FINAL GRADING IS COMPLETED. FERTILIZE SEED AND MULCH. SEED MIXTURE TO BE INSTALLED APRIL 15 – JUNE 1 OR AUGUST 15–OCTOBER 1 USE EROSION CONTROL BLANKETS AS REQUIRED OR ORDERED FOR SLOPES GREATER THAN 3:1 AND AS SHOWN ON LANDSCAPE PLANS OR EROSION CONTROL PLANS. FOR TEMPORARY STABILIZATION BEYOND SEEDING DATES USE ANNUAL RYE AT 4.0 LBS/1,000 S.F. FERTILIZE WITH 10–10–10 AT 1.0 LBS. OF NITROGEN PER 1,000 S.F. AND LIME AT 100 LBS/1,000 S.F. (MAX.).

25. LANDSCAPE ISLANDS, INTERIOR NON-PAVED AREAS, AND PERIMETER AREAS.

26. INSTALL SIGNING AND PAVEMENT MARKINGS

27. CLEAN STORM DRAINAGE PIPE STRUCTURES, DETENTION SYSTEMS AND WATER QUALITY DEVICES OF DEBRIS AND SEDIMENT.

28. UPON DIRECTION OF THE MUNICIPALITY AND/OR INLAND WETLANDS AGENCY/CONSERVATION COMMISSION AGENT, SEDIMENT AND EROSION CONTROL MEASURES SHALL BE REMOVED FOLLOWING STABILIZATION OF THE SITE.

OPERATION REQUIREMENTS

CLEARING AND GRUBBING OPERATIONS
1. ALL SEDIMENT AND EROSION CONTROL MEASURES, INCLUDING THE CONSTRUCTION OF TEMPORARY SEDIMENTATION BASINS AND STONE CONSTRUCTION ENTRANCE ANTI-TRACKING PADS, WILL BE INSTALLED PRIOR TO THE START OF CLEARING AND GRUBBING AND DEMOLITION OPERATIONS.

2. FOLLOWING INSTALLATION OF ALL SEDIMENT AND EROSION CONTROL MEASURES, THE CONTRACTOR SHALL NOT PROCEED WITH GRADING, FILLING OR OTHER CONSTRUCTION OPERATIONS UNTIL THE ENGINEER HAS INSPECTED AND APPROVED ALL INSTALLATIONS.

3. THE CONTRACTOR SHALL TAKE EXTREME CARE DURING CLEARING AND GRUBBING OPERATIONS SO AS NOT TO DISTURB UNPROTECTED WETLAND AREAS OR SEDIMENT AND EROSION CONTROL DEVICES.

4. FOLLOWING THE COMPLETION OF CLEARING AND GRUBBING OPERATIONS, ALL AREAS SHALL BE STABILIZED WITH TOPSOIL AND SEEDING OR CRUSHED STONE AS SOON AS PRACTICAL.

ROUGH GRADING OPERATIONS

1. DURING THE REMOVAL AND/OR PLACEMENT OF EARTH AS INDICATED ON THE GRADING PLAN, TOPSOIL SHALL BE STRIPPED AND APPROPRIATELY STOCKPILED FOR REUSE.

2. ALL STOCKPILED TOPSOIL SHALL BE SEEDED, MULCHED WITH HAY, AND ENCLOSED BY A SILTATION FENCE.

FILLING OPERATIONS

1. PRIOR TO FILLING, ALL SEDIMENT AND EROSION CONTROL DEVICES SHALL BE PROPERLY IMPLEMENTED, MAINTAINED AND FULLY INSTALLED, AS DIRECTED BY THE ENGINEER AND AS SHOWN ON THIS PLAN.

2. ALL FILL MATERIAL ADJACENT TO ANY WETLAND AREAS, IF APPLICABLE TO THIS PROJECT, SHALL BE GOOD QUALITY, WITH LESS THAN 5% FINES PASSING THROUGH A #200 SIEVE (BANK RUN), SHALL BE PLACED IN LIFT THICKNESSES NOT GREATER THAN THAT SPECIFIED IN PROJECT SPECIFICATIONS AND/OR THE PROJECT GEOTECHNICAL REPORT. LIFTS SHALL BE COMPACTED TO 95% MAX. DRY DENSITY MODIFIED PROCTOR OR AS SPECIFIED IN THE CONTRACT SPECIFICATIONS OR IN THE GEOTECHNICAL REPORT.

3. AS GENERAL GRADING OPERATIONS PROGRESS, ANY TEMPORARY DIVERSION DITCHES SHALL BE RAISED OR LOWERED, AS NECESSARY, TO DIVERT SURFACE RUNOFF TO THE SEDIMENT BASINS OR SEDIMENT TRAPS.

PLACEMENT OF DRAINAGE STRUCTURES, UTILITIES, AND BUILDING CONSTRUCTION OPERATIONS.

1. SILT FENCES SHALL BE INSTALLED AT THE DOWNHILL SIDES OF BUILDING EXCAVATIONS, MUD PUMP DISCHARGES, AND UTILITY TRENCH MATERIAL STOCKPILES. HAY BALES/STRAW BALES MAY BE USED IF SHOWN ON THE SEDIMENT AND EROSION CONTROL PLANS OR IF DIRECTED BY THE CIVIL ENGINEER.

FINAL GRADING AND PAVING OPERATIONS

1. ALL INLET AND OUTLET PROTECTION SHALL BE PLACED AND MAINTAINED AS SHOWN ON SEDIMENT AND EROSION CONTROL PLANS AND DETAILS, AND AS DESCRIBED IN SPECIFICATIONS AND AS DESCRIBED HEREIN.

2. NO CUT OR FILL SLOPES SHALL EXCEED 2:1 EXCEPT WHERE STABILIZED BY ROCK FACED EMBANKMENTS OR EROSION CONTROL BLANKETS, OR JUTE MESH AND VEGETATION. ALL SLOPES SHALL BE SEEDED, AND ANY ROAD OR DRIVEWAY SHOULDER AND BANKS SHALL BE STABILIZED IMMEDIATELY UPON COMPLETION OF FINAL GRADING UNTIL TURF IS ESTABLISHED.

3. PAVEMENT SUB-BASE AND BASE COURSES SHALL BE INSTALLED OVER AREAS TO BE PAVED AS SOON AS FINAL SUB-GRADES ARE ESTABLISHED AND UNDERGROUND UTILITIES AND STORM DRAINAGE SYSTEMS HAVE BEEN INSTALLED.

4. AFTER CONSTRUCTION OF PAVEMENT, TOPSOIL, FINAL SEED, MULCH AND LANDSCAPING, REMOVE ALL TEMPORARY SEDIMENT AND EROSION CONTROL DEVICES ONLY AFTER ALL AREAS HAVE BEEN PAVED AND/OR GRASS HAS BEEN WELL ESTABLISHED AND THE SITE IS STABLE AND HAS BEEN INSPECTED AND APPROVED BY THE MUNICIPALITY AND/OR INLAND WETLANDS AGENCY/CONSERVATION COMMISSION.

INSTALLATION OF SEDIMENTATION AND EROSION CONTROL MEASURES

I. SILTATION FENCE
A. DIG A SIX INCH TRENCH ON THE UPHILL SIDE OF THE DESIGNATED FENCE LINE LOCATION.

B. POSITION THE POST AT THE BACK OF THE TRENCH (DOWNHILL SIDE), AND HAMMER THE POST AT LEAST 1.5 FEET INTO THE GROUND.

C. LAY THE BOTTOM SIX INCHES OF THE FABRIC INTO THE TRENCH TO PREVENT UNDERMINING BY STORM WATER RUN-OFF.

D. BACKFILL THE TRENCH AND COMPACT.

II. HAY BALES/STRAW BALES
A. BALES SHALL BE PLACED IN A SINGLE ROW, LENGTHWISE, ORIENTED PARALLEL TO THE CONTOUR, WITH ENDS OF ADJACENT BALES TIGHTLY ABUTTING ONE ANOTHER.

B. BALES SHALL BE ENTRENCHED AND BACKFILLED. A TRENCH SHALL BE EXCAVATED THE WIDTH OF A BALE AND THE LENGTH OF THE PROPOSED BARRIER TO A MINIMUM DEPTH OF FOUR INCHES. AFTER THE BALES ARE STAKED, THE EXCAVATED SOIL SHALL BE BACKFILLED AGAINST THE BARRIER.

C. EACH BALE SHALL BE SECURELY ANCHORED BY AT LEAST TWO (2) STAKES.

D. THE GAPS BETWEEN BALES SHALL BE WEDGED WITH STRAW TO PREVENT WATER LEAKAGE.

E. THE BARRIER SHALL BE EXTENDED TO SUCH A LENGTH THAT THE BOTTOMS OF THE END BALES ARE HIGHER IN ELEVATION THAN THE TOP OF THE LOWEST MIDDLE BALE, TO ENSURE THAT RUN-OFF WILL FLOW EITHER THROUGH OR OVER THE BARRIER, BUT NOT AROUND IT.

OPERATION AND MAINTENANCE OF SEDIMENT AND EROSION CONTROL MEASURES
I. SILTATION FENCE
A. ALL SILTATION FENCES SHALL BE INSPECTED AS A MINIMUM WEEKLY OR AFTER EACH RAINFALL. ALL DETERIORATED FABRIC AND DAMAGED POSTS SHALL BE REPLACED AND PROPERLY REPOSITIONED IN ACCORDANCE WITH THIS PLAN.

B. SEDIMENT DEPOSITS SHALL BE REMOVED FROM BEHIND THE FENCE WHEN THEY EXCEED A HEIGHT OF ONE FOOT.

II. HAY BALES/STRAW BALES
A. ALL HAY BALE/STRAW BALE RINGS SHALL BE INSPECTED FOLLOWING EACH RAINFALL. REPAIR OR REPLACEMENT SHALL BE PROMPTLY MADE AS NEEDED.

B. DEPOSITS SHALL BE REMOVED AND CLEANED-OUT IF ONE HALF OF THE ORIGINAL HEIGHT OF THE BALES BECOMES FILLED WITH SEDIMENT.

III. SEDIMENT BASINS/SEDIMENT TRAPS
A. CONTRACTOR TO KEEP WEEKLY CHECKLIST LOGS FOR INSPECTIONS OF ALL SEDIMENT AND EROSION CONTROL DEVICES AND HAVE THEM READILY AVAILABLE ON-SITE AT ALL TIMES FOR INSPECTION BY DEEP, LOCAL AUTHORITIES OR ENGINEER.

B. ALL SEDIMENT BASINS AND/OR SEDIMENT TRAPS SHALL BE INSPECTED FOLLOWING EACH RAINFALL. REPAIR OF SLOPES SHALL BE PROMPTLY MADE AS NEEDED.

C. SEDIMENT DEPOSITS SHALL BE REMOVED FROM SEDIMENT BASINS AND/OR SEDIMENT TRAPS WHEN THEY EXCEED A HEIGHT OF ONE FOOT UNLESS OTHERWISE INDICATED ON THE EROSION CONTROL PLANS AND DETAILS TO BE AT A SPECIFIC ELEVATION PER CLEAN OUT MARKERS.

D. SEDIMENT SHALL BE DISPOSED OF ON-SITE OR AS DIRECTED BY THE ENGINEER AND LOCAL GOVERNING OFFICIALS. SEE SEDIMENT AND EROSION CONTROL NOTES HEREIN REGARDING DISPOSAL REQUIREMENTS FOR OFF SITE SPOIL DISPOSAL.

SEDIMENT AND EROSION CONTROL PLAN
1. HAY BALE/STRAW BALE FILTERS WILL BE INSTALLED AT ALL CULVERT OUTLETS IF CULVERT OUTLETS ARE APPLICABLE TO THIS PROJECT AND SILTATION FENCE INSTALLED ALONG THE TOE OF ALL CRITICAL CUT AND FILL SLOPES.

2. CULVERT DISCHARGE AREAS WILL BE PROTECTED WITH RIP RAP CHANNELS. ENERGY DISSIPATORS WILL BE INSTALLED AS SHOWN ON THESE PLANS AND AS NECESSARY.

3. CATCH BASINS WILL BE PROTECTED WITH HAY BALE/STRAW BALE FILTERS, SILT SACKS, SILTATION FENCE, OR OTHER INLET PROTECTION DEVICES PER DETAILS, THROUGHOUT THE CONSTRUCTION PERIOD AND UNTIL ALL DISTURBED AREAS ARE THOROUGHLY STABILIZED.

4. ALL SEDIMENT AND EROSION CONTROL MEASURES WILL BE INSTALLED IN ACCORDANCE WITH THE STANDARDS AND SPECIFICATIONS OF THE 2002 CONNECTICUT GUIDELINES FOR SOIL EROSION AND SEDIMENT CONTROL, LATEST EDITION.

5. SEDIMENT AND EROSION CONTROL MEASURES WILL BE INSTALLED PRIOR TO DEMOLITION AND/OR CONSTRUCTION WHENEVER POSSIBLE.

6. ALL CONTROL MEASURES WILL BE MAINTAINED IN EFFECTIVE CONDITION THROUGHOUT THE DEMOLITION AND CONSTRUCTION PERIOD UNTIL THE SITE IS DETERMINED TO BE STABILIZED BY THE AUTHORITY HAVING JURISDICTION.

7. ADDITIONAL CONTROL MEASURES WILL BE INSTALLED DURING THE CONSTRUCTION PERIOD, IF NECESSARY OR REQUIRED OR AS DIRECTED BY THE CIVIL ENGINEER OR BY THE AUTHORITY HAVING JURISDICTION.

8. SEDIMENT REMOVED FROM EROSION CONTROL STRUCTURES WILL BE DISPOSED IN A MANNER WHICH IS CONSISTENT WITH THE INTENT AND REQUIREMENTS OF THE SEDIMENT AND EROSION CONTROL PLANS, NOTES, AND DETAILS.

9. THE CONTRACTOR IS ASSIGNED THE RESPONSIBILITY FOR IMPLEMENTING THIS SEDIMENT AND EROSION CONTROL PLAN. THIS RESPONSIBILITY INCLUDES THE INSTALLATION AND MAINTENANCE OF CONTROL MEASURES, INFORMING ALL PARTIES ENGAGED ON THE CONSTRUCTION SITE OF THE REQUIREMENTS AND OBJECTIVES OF THE PLAN, NOTIFICATION OF THE MUNICIPALITY AND/OR INLAND WETLANDS AGENCY/CONSERVATION COMMISSION OFFICE OR AUTHORITY HAVING JURISDICTION OF ANY TRANSFER OF THIS RESPONSIBILITY AND FOR CONVEYING A COPY OF THE SEDIMENT AND EROSION CONTROL PLAN IF THE TITLE TO THE LAND IS TRANSFERRED.

SEDIMENT AND EROSION CONTROL NOTES
1. THE SEDIMENT AND EROSION CONTROL PLAN IS ONLY INTENDED TO DESCRIBE THE SEDIMENT AND EROSION CONTROL TREATMENT FOR THIS SITE. SEE SEDIMENT AND EROSION CONTROL DETAILS AND CONSTRUCTION SEQUENCE. REFER TO SITE PLAN FOR GENERAL INFORMATION AND OTHER CONTRACT PLANS FOR APPROPRIATE INFORMATION.

2. THE CONTRACTOR IS RESPONSIBLE FOR IMPLEMENTING THIS SEDIMENT AND EROSION CONTROL PLAN. THIS RESPONSIBILITY INCLUDES THE PROPER INSTALLATION AND MAINTENANCE OF SEDIMENT AND EROSION CONTROL MEASURES, INFORMING ALL PARTIES ENGAGED WITH CONSTRUCTION ON THE SITE OF THE REQUIREMENTS AND OBJECTIVES OF THIS PLAN, INFORMING THE AUTHORITY HAVING JURISDICTION OR INLAND WETLANDS AGENCY/CONSERVATION COMMISSION OF ANY TRANSFER OF THIS RESPONSIBILITY, AND FOR CONVEYING A COPY OF THE SEDIMENT & EROSION CONTROL PLAN IF THE TITLE TO THE LAND IS TRANSFERRED.

3. AN EROSION CONTROL BOND MAY BE REQUIRED TO BE POSTED WITH THE TOWN OF SOUTH WINDSOR TO ENSURE IMPLEMENTATION OF THE SEDIMENT AND EROSION CONTROL MEASURES. THE CONTRACTOR SHALL BE RESPONSIBLE FOR THE POSTING OF THIS BOND AND FOR INQUIRIES TO THE TOWN OF SOUTH WINDSOR FOR INFORMATION ON THE METHOD, TYPE AND AMOUNT OF THE BOND POSTING UNLESS OTHERWISE DIRECTED BY THE OWNER.

4. VISUAL SITE INSPECTIONS SHALL BE CONDUCTED WEEKLY, AND AFTER EACH MEASURABLE PRECIPITATION EVENT OF 0.25 INCHES OR GREATER BY QUALIFIED PERSONNEL, TRAINED AND EXPERIENCED IN SEDIMENT AND EROSION CONTROL, TO ASCERTAIN THAT THE SEDIMENT AND EROSION CONTROL (E&S) BMPS ARE OPERATIONAL AND EFFECTIVE IN PREVENTING POLLUTION. A WRITTEN REPORT OF EACH INSPECTION SHALL BE KEPT, AND INCLUDE:
A) A SUMMARY OF THE SITE CONDITIONS, E&S BMPS, AND COMPLIANCE; AND
B) THE DATE, TIME, AND THE NAME OF THE PERSON CONDUCTING THE INSPECTION
C) TURBIDITY TESTING AS REQUIRED BY THE GENERAL PERMIT (NPDES)

5. THE CONTRACTOR SHALL CONSTRUCT ALL SEDIMENT AND EROSION CONTROLS IN ACCORDANCE WITH THE 2002 CONNECTICUT GUIDELINES FOR SOIL EROSION AND SEDIMENT CONTROL, LATEST EDITION IN ACCORDANCE WITH THE CONTRACT DOCUMENTS, AND AS DIRECTED BY THE MUNICIPALITY AND/OR INLAND WETLANDS AGENCY/CONSERVATION COMMISSION. THE CONTRACTOR SHALL KEEP A COPY OF THE GUIDELINES ON-SITE FOR REFERENCE DURING CONSTRUCTION.

6. ADDITIONAL AND/OR ALTERNATIVE SEDIMENT AND EROSION CONTROL MEASURES MAY BE INSTALLED DURING THE CONSTRUCTION PERIOD IF FOUND NECESSARY BY THE CONTRACTOR, OWNER, SITE ENGINEER, MUNICIPALITY AND/OR INLAND WETLANDS AGENCY/CONSERVATION COMMISSION, OR GOVERNING AGENCIES. THE CONTRACTOR SHALL CONTACT THE OWNER AND APPROPRIATE GOVERNING AGENCIES FOR APPROVAL IF ALTERNATIVE CONTROLS OTHER THAN THOSE SHOWN ON THE PLANS ARE PROPOSED.

7. THE CONTRACTOR SHALL INSPECT ALL SEDIMENT AND EROSION CONTROLS BEFORE AND AFTER EACH STORM (0.25 INCHES OR GREATER RAINFALL), OR AT LEAST WEEKLY, TO VERIFY THAT THE CONTROLS ARE OPERATING PROPERLY AND MAKE REPAIRS WHERE NECESSARY.

8. THE CONTRACTOR SHALL KEEP A SUPPLY OF SEDIMENT AND EROSION CONTROL MATERIAL (HAY BALES, SILT FENCE, JUTE MESH, RIP RAP, ETC.) ON-SITE FOR MAINTENANCE AND EMERGENCY REPAIRS.

9. PROTECT EXISTING TREES THAT ARE TO BE SAVED BY FENCING AT THE DRIP LINE OR AS SHOWN WITH SNOW FENCE, ORANGE SAFETY FENCE, OR EQUIVALENT FENCING. ANY LIMB TRIMMING SHOULD BE DONE BEFORE CONSTRUCTION BEGINS IN THAT AREA; FENCING SHALL BE MAINTAINED AND REPAIRED DURING CONSTRUCTION.

10. INSTALL PERIMETER SEDIMENT AND EROSION CONTROLS PRIOR TO CLEARING OR CONSTRUCTION. ALL CONSTRUCTION SHALL BE CONTAINED WITHIN THE LIMIT OF DISTURBANCE, WHICH SHALL BE MARKED WITH SILT FENCE, SAFETY FENCE, HAY BALES, RIBBONS, OR OTHER MEANS PRIOR TO CLEARING. CONSTRUCTION ACTIVITY SHALL REMAIN ON THE UPHILL SIDE OF THE SILT FENCE UNLESS WORK IS SPECIFICALLY CALLED FOR ON THE DOWNHILL SIDE OF THE FENCE.

11. STONE CONSTRUCTION ENTRANCE ANTI-TRACKING PADS SHALL BE INSTALLED AT START OF CONSTRUCTION AND MAINTAINED THROUGHOUT THE DURATION OF CONSTRUCTION. THE LOCATION OF THE CONSTRUCTION ENTRANCE TRACKING PADS MAY CHANGE AS VARIOUS PHASES OF CONSTRUCTION ARE COMPLETED.

12. TOPSOIL SHALL BE STRIPPED AND STOCKPILED FOR USE IN FINAL LANDSCAPING. ALL EARTH STOCKPILES SHALL HAVE HAY BALES OR SILT FENCE AROUND THE LIMIT OF PILE. PILES SHALL BE TEMPORARILY SEEDED IF PILE IS TO REMAIN IN PLACE FOR MORE THAN ONE (1) MONTH.

13. SEDIMENT BASINS AND SEDIMENT TRAPS SHALL PROVIDE 134 CUBIC YARDS OF SEDIMENT STORAGE PER ACRE CONTRIBUTING TO THE BASIN. PROVIDE BASIN VOLUMES FOR ALL DISTURBANCE ON SITE.

14. COMPLY WITH REQUIREMENTS OF CGS SECTION 22A 430B, FOR STORMWATER DISCHARGE FROM CONSTRUCTION ACTIVITIES AND WITH DEEP RECORD KEEPING AND INSPECTION REQUIREMENTS.

15. STONE CONSTRUCTION ENTRANCE ANTI-TRACKING PADS SHALL BE INSTALLED PRIOR TO ANY ON SITE EXCAVATION AND SHALL BE MAINTAINED DURING ALL DEMOLITION, EXCAVATION AND CONSTRUCTION ACTIVITIES.

16. MINIMIZE LAND DISTURBANCES. SEED AND MULCH DISTURBED AREAS WITH TEMPORARY MIX AS SOON AS PRACTICABLE (ONE WEEK MAXIMUM UNSTABILIZED PERIOD) USING PERENNIAL RYEGRASS AT 40 LBS PER ACRE. MULCH ALL CUT AND FILL SLOPES AND SWALES WITH LOOSE HAY AT A RATE OF 2 TONS PER ACRE. IF NECESSARY, REPLACE LOOSE HAY ON SLOPES WITH EROSION CONTROL BLANKETS OR JUTE CLOTH. MODERATELY GRADED AREAS, ISLANDS, AND TEMPORARY CONSTRUCTION STAGING AREAS MAY BE HYDROSEEDED WITH TACKIFIER.

17. MAINTAIN EXISTING PAVED AREAS FOR CONSTRUCTION STAGING FOR AS LONG AS POSSIBLE.

18. SILT FENCE AND OTHER SEDIMENT AND EROSION CONTROL MEASURES SHALL BE INSTALLED IN ACCORDANCE WITH CONTRACT DRAWINGS AND MANUFACTURER'S RECOMMENDATIONS PRIOR TO WORK IN ANY UPLAND AREAS.

19. EXCAVATED MATERIAL FROM TEMPORARY SILT TRAPS MUST BE STOCKPILED ON UPHILL SIDE OF SILT FENCE.

20. INSTALL SILT FENCE ACCORDING TO MANUFACTURER'S INSTRUCTION, PARTICULARLY, BURY LOWER EDGE OF FABRIC INTO GROUND. SILT FENCE SHALL BE TENCATE ENVIROFENCE, PROPEX GEOTEX OR EQUIVALENT APPROVED BY THE CIVIL ENGINEER. FILTER FABRIC USED SHALL BE MIRAFI 100X OR APPROVED EQUIVALENT. SEE SPECIFICATIONS FOR FURTHER INFORMATION.

21. WHERE INDICATED ON SEDIMENT AND EROSION CONTROL PLANS USE NEW HAY/STRAW BALES AND REPLACE THEM WHENEVER THEIR CONDITION DETERIORATES BEYOND REASONABLE USABILITY. STAKE BALES SECURELY INTO GROUND AND BUTT TIGHTLY TOGETHER TO PREVENT UNDERCUTTING AND BYPASSING.

22. INSTALL TEMPORARY DIVERSION DITCHES, PLUNGE POOLS, SEDIMENT BASINS, SEDIMENT TRAPS, CONCRETE WASH PITS AND DEWATERING PITS AS SHOWN AND AS NECESSARY DURING VARIOUS PHASES OF CONSTRUCTION TO CONTROL RUNOFF UNTIL UPHILL AREAS ARE DETERMINED TO BE STABILIZED BY THE AUTHORITY HAVING JURISDICTION. LOCATION OF TEMPORARY SEDIMENT BASINS WILL REQUIRE REVIEW AND APPROVAL BY THE CIVIL ENGINEER AND AUTHORITY HAVING JURISDICTION.

23. DIRECT ALL DEWATERING PUMP DISCHARGE TO A SEDIMENT CONTROL DEVICE SUCH AS TEMPORARY PITS, SEDIMENT TRAP, SEDIMENT BASINS OR GRASS FILTERS WITHIN THE APPROVED LIMIT OF DISTURBANCE. DISCHARGE TO STORM DRAINAGE SYSTEM OR SURFACE WATERS FROM SEDIMENT CONTROLS SHALL BE CLEAR.

24. BLOCK END OF STORM SEWERS IN EXPOSED TRENCHES WITH BOARDS AND SANDBAGS AT THE END OF EACH WORKING DAY WHEN RAIN IS EXPECTED.

25. SWEEP AFFECTED PORTIONS OF OFF SITE ROADS ONE OR MORE TIMES A DAY (OR LESS FREQUENTLY IF TRACKING IS NOT A PROBLEM) DURING CONSTRUCTION. OTHER DUST CONTROL MEASURES TO BE USED AS NECESSARY INCLUDE WATERING DOWN DISTURBED AREAS, USING CALCIUM CHLORIDE, AND COVERING LOADS ON DUMP TRUCKS.

26. PERIODICALLY CHECK ACCUMULATED SEDIMENT LEVELS IN THE SEDIMENT BASINS AND SEDIMENT TRAPS DURING CONSTRUCTION AND CLEAN ACCUMULATED SILT WHEN NECESSARY OR WHEN ONE FOOT OF SEDIMENT HAS ACCUMULATED OR PER SPECIFIC CLEANOUT MARKER ELEVATION. CLEAN ACCUMULATED SEDIMENT FROM CATCH BASIN SUMPS AS NECESSARY AND AS DIRECTED BY THE CIVIL ENGINEER OR OWNER'S CONSTRUCTION REPRESENTATIVE. REMOVE ACCUMULATED SEDIMENT FROM BEHIND HAY/STRAW BALES AND SILT FENCE WHEN LEVEL REACHES HALF THE HEIGHT OF THE BALE OR ONE FOOT AT SILT FENCE. DISPOSE OF SEDIMENT LEGALLY EITHER ON OR OFF SITE.

27. IMMEDIATELY UPON DISCOVERING UNFORESEEN CIRCUMSTANCES POSING THE POTENTIAL FOR ACCELERATED EROSION AND/OR SEDIMENT POLLUTION, THE OPERATOR SHALL IMPLEMENT APPROPRIATE BEST MANAGEMENT PRACTICES TO ELIMINATE THE POTENTIAL FOR ACCELERATED EROSION AND/OR SEDIMENT POLLUTION.

28. ALL PUMPING OF SEDIMENT LADEN WATER SHALL BE THROUGH A SEDIMENT CONTROL BMP, SUCH AS A PUMPED WATER FILTER BAG OR EQUIVALENT SEDIMENT REMOVAL FACILITY, OVER UNDISTURBED VEGETATED AREAS.

29. ALL EXCAVATED MATERIAL SHALL BE PLACED ON THE HIGH SIDE OF UTILITY AND STORM PIPE TRENCHES SO AS TO ALLOW THE TRENCH TO INTERCEPT ALL SILT LADEN RUNOFF.

30. CONTRACTOR SHALL ONLY EXCAVATE AS MUCH UTILITY AND STORM PIPE TRENCH WORK AS CAN BE COMPLETED, BACKFILLED AND STABILIZED IN ONE DAY SO AS TO LIMIT THE AMOUNT OF OPEN, DISTURBED TRENCHING.

31. ANY STOCKPILES OF STRIPPED MATERIALS ARE TO BE PERIODICALLY SPRAYED WITH WATER OR A CRUSTING AGENT TO STABILIZE POTENTIALLY WIND-BLOWN MATERIAL. HAUL ROADS BOTH INTO AND AROUND THE SITE ARE TO BE SPRAYED AS NEEDED TO SUPPRESS DUST. TRUCKS HAULING IMPORT FILL MATERIAL ARE TO BE TARPED TO AID IN THE CONTROL OF AIRBORNE DUST. DURING HIGH WIND EVENTS (20 TO 30 MPH SUSTAINED) CONSTRUCTION ACTIVITY SHALL BE LIMITED OR CEASED IF DUST CANNOT BE CONTROLLED BY WETTING.

32. AN AREA SHALL BE CONSIDERED TO HAVE ACHIEVED FINAL STABILIZATION WHEN IT HAS A MINIMUM OF 70% UNIFORM PERENNIAL VEGETATIVE COVER OR OTHER PERMANENT NON-VEGETATIVE COVER WITH A DENSITY SUFFICIENT TO RESIST ACCELERATED SURFACE EROSION AND SUBSURFACE CHARACTERISTICS SUFFICIENT TO RESIST SLIDING OR OTHER MOVEMENTS UNLESS OTHERWISE DETERMINED BY THE AUTHORITY HAVING JURISDICTION.

33. MAINTAIN ALL PERMANENT AND TEMPORARY EROSION AND SEDIMENT CONTROL DEVICES IN EFFECTIVE CONDITION THROUGHOUT THE CONSTRUCTION PERIOD. UPON COMPLETION OF WORK SWEEP PARKING LOT AND REMOVE ALL TEMPORARY EROSION AND SEDIMENT CONTROLS WHEN AUTHORIZED BY AUTHORITY HAVING JURISDICTION. FILE NOT (NOTICE OF TERMINATION) WITH AUTHORITY HAVING JURISDICTION RESPONSIBLE FOR REGULATING STORM WATER DISCHARGES FROM CONSTRUCTION ACTIVITIES PER NPDES.

FOR PERMITTING PURPOSES ONLY
NOT RELEASED FOR CONSTRUCTION

BL Compan

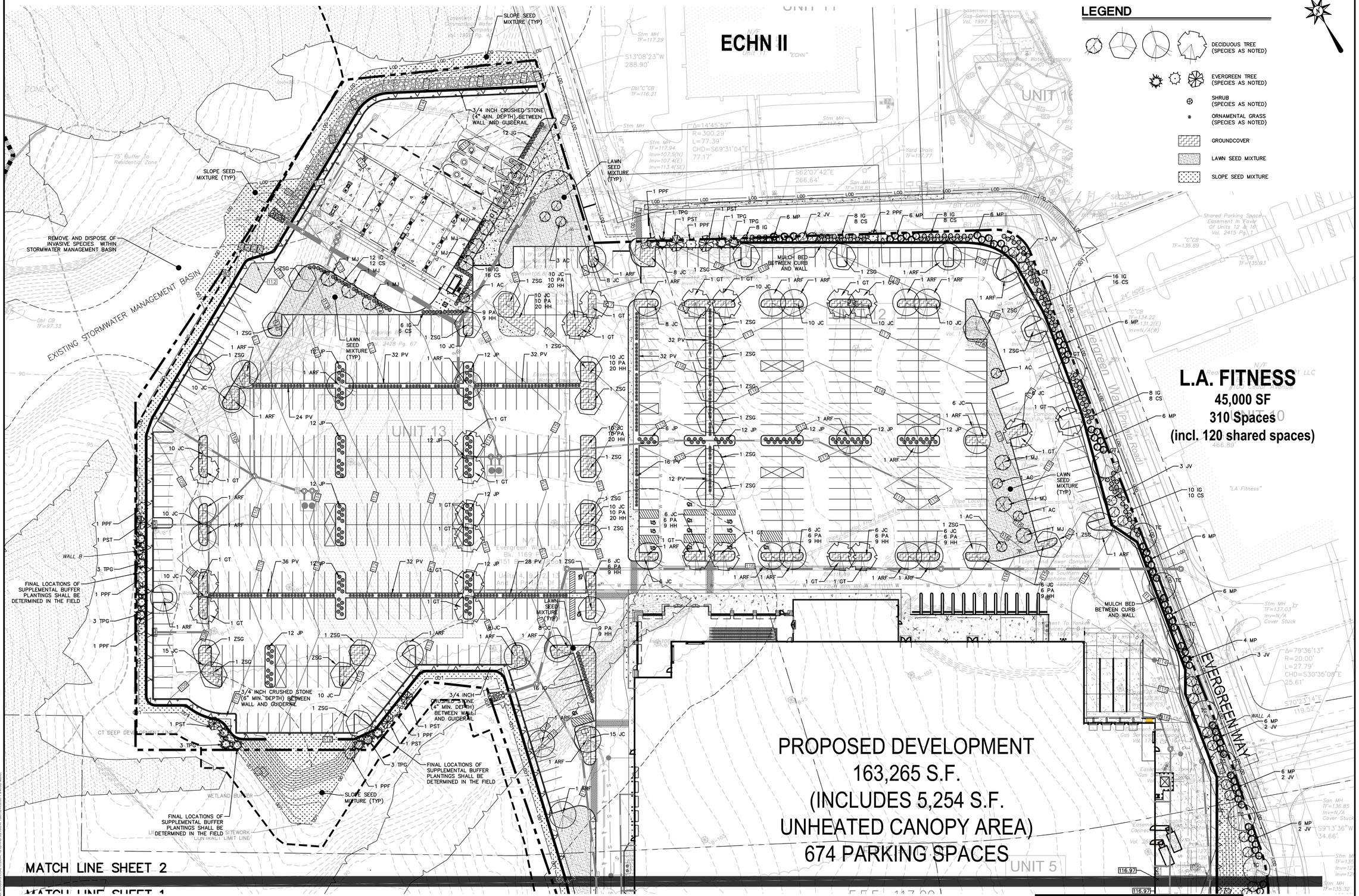

NOTE:
REFER TO SHEET LL-3 FOR LANDSCAPE DETAILS AND NOTES

FOR PERMITTING PURPOSES ONLY
NOT RELEASED FOR CONSTRUCTION

Architecture
Engineering
Environmental
Land Surveying
BL Companies
100 Constitution Plaza, 10th Floor
Hartford, CT 06103
(860) 249-2200
(860) 249-2400 Fax

STATE OF CONNECTICUT
MICHELLE M. CARSON
No. 20951
LICENSED PROFESSIONAL ENGINEER

PROPOSED DEVELOPMENT

EVERGREEN WALK - UNIT 12
151 BUCKLAND ROAD
SOUTH WINDSOR, CONNECTICUT

Desc.	
DRAINAGE MODIFICATION PLANNING AND ZONING SUBMISSION RESPONSE TO COMMENTS	

REVISIONS

No.	Date
1	01/24/2020
2	08/14/2020
3	10/20/2020

Designed	L.M.W.
Drawn	L.M.W.
Reviewed	
Scale	1"=40'
Project No.	13C4718
Date	09/18/2019
CAD File: LL13C471801	

Title
LANDSCAPE PLAN

Sheet No.
LL-1

© 2020 BL COMPANIES, INC. THESE DRAWINGS SHALL NOT BE UTILIZED BY ANY PERSON, FIRM OR CORPORATION WITHOUT THE SPECIFIC WRITTEN PERMISSION OF BL COMPANIES.

ZONING INFORMATION

LOCATION: SOUTH WINDSOR, CONNECTICUT				
ZONE: GD (BUCKLAND ROAD GATEWAY DEVELOPMENT)				
USE: RETAIL (PERMITTED USE WITH SITE PLAN)				
ITEM #	ITEM	REQUIREMENTS	PROPOSED	VARIANCE
1	PARKING LOT LANDSCAPING PERIMETER LANDSCAPING	PERIMETER LANDSCAPING IS REQUIRED AROUND ALL PARKING AREAS. PLANTING ALONG THE PERIMETER OF A PARKING AREA (INCLUDING SCREENING, LANDSCAPING, OR BUFFERING) WILL NOT BE CONSIDERED AS PART OF THE INTERIOR LANDSCAPING REQUIREMENT. TERMINAL PENINSULA PLANTING AREAS AT THE ENDS OF ROWS OF PARKING WITHIN ANY PERIMETER ACCESS DRIVE MAY BE COUNTED TOWARD THE INTERIOR LANDSCAPING REQUIREMENT AS LONG AS EACH SUCH PENINSULA HAS A MINIMUM DIMENSION OF AT LEAST 8 FEET IN ITS NARROWEST DIMENSION AND CONTAINS AT LEAST 1 TREE.	COMPLIES	NO
2	PARKING LOT LANDSCAPING TREES & GROUNDCOVERS	FOR LANDSCAPING PURPOSES, GROUND COVER ALONE IS NOT ACCEPTABLE. TREES SHOULD BE SELECTED FOR SHADE AND ADAPTABILITY TO PARKING LOT CONDITIONS.	COMPLIES	NO
3	PARKING LOT LANDSCAPING TREE SIZES	DECIDUOUS SHADE TREES SHALL BE A MINIMUM OF 2 INCH CALIPER AND 10 FEET AT PLANTING; FLOWERING TREES SHALL BE A MINIMUM OF 6 FEET IN HEIGHT AT THE TIME OF PLANTING AND 1.5 INCH CALIPER.	COMPLIES	YES
4	PARKING LOT LANDSCAPING ISLAND SIZES	ISLANDS (MID-BAY AND TERMINAL BAY LOCATIONS) MINIMUM DIMENSION OF 8 FEET IN ANY DIRECTION	COMPLIES	NO
5	PARKING LOT LANDSCAPING ISLAND SIZES	TERMINAL PENINSULA PLANTING AREAS AT LEAST 1 TREE MINIMUM DIMENSION OF 8 FEET IN ANY DIRECTION	COMPLIES	NO
6	PARKING LOT LANDSCAPING STREET FRONTAGE AND PERIMETER SCREENING	1 TREE OR 2 SHRUBS OR A 5'X 5'PLANTING BED (OR ANY EQUIVALENT COMBINATION) FOR EVERY 3 PERIMETER PARKING SPACES MINIMUM WIDTH OF 10 FEET THE COMMISSION MAY WAIVE UP TO ½ OF THIS REQUIREMENT FOR EXCELLENCE IN THE PROPOSED PLANTING PLAN IN TERMS OF THE VARIETY AND SIZE OF THE PROPOSED PLANTINGS	COMPLIES	NO
7	PARKING LOT LANDSCAPING MINIMUM INTERIOR LANDSCAPING	10 PERCENT OF INTERIOR PARKING AREAS	10.0 PERCENT	NO
8	LOCATION OF LANDSCAPING	THE LANDSCAPING SHOULD BE LOCATED IN PROTECTED AREAS, SUCH AS ALONG WALKWAYS, IN CENTER ISLANDS, AT THE END OF BAYS, OR BETWEEN PARKING STALLS.	COMPLIES	NO
9	PARKING LOT LANDSCAPING TREES	FOR EVERY 10 PARKING SPACES, A MINIMUM OF 1 TREE OF AT LEAST 3 INCH CALIPER MUST BE PLANTED.	674 PARKING SPACES PROPOSED 68 TREES REQUIRED 89 TREES PROPOSED	NO

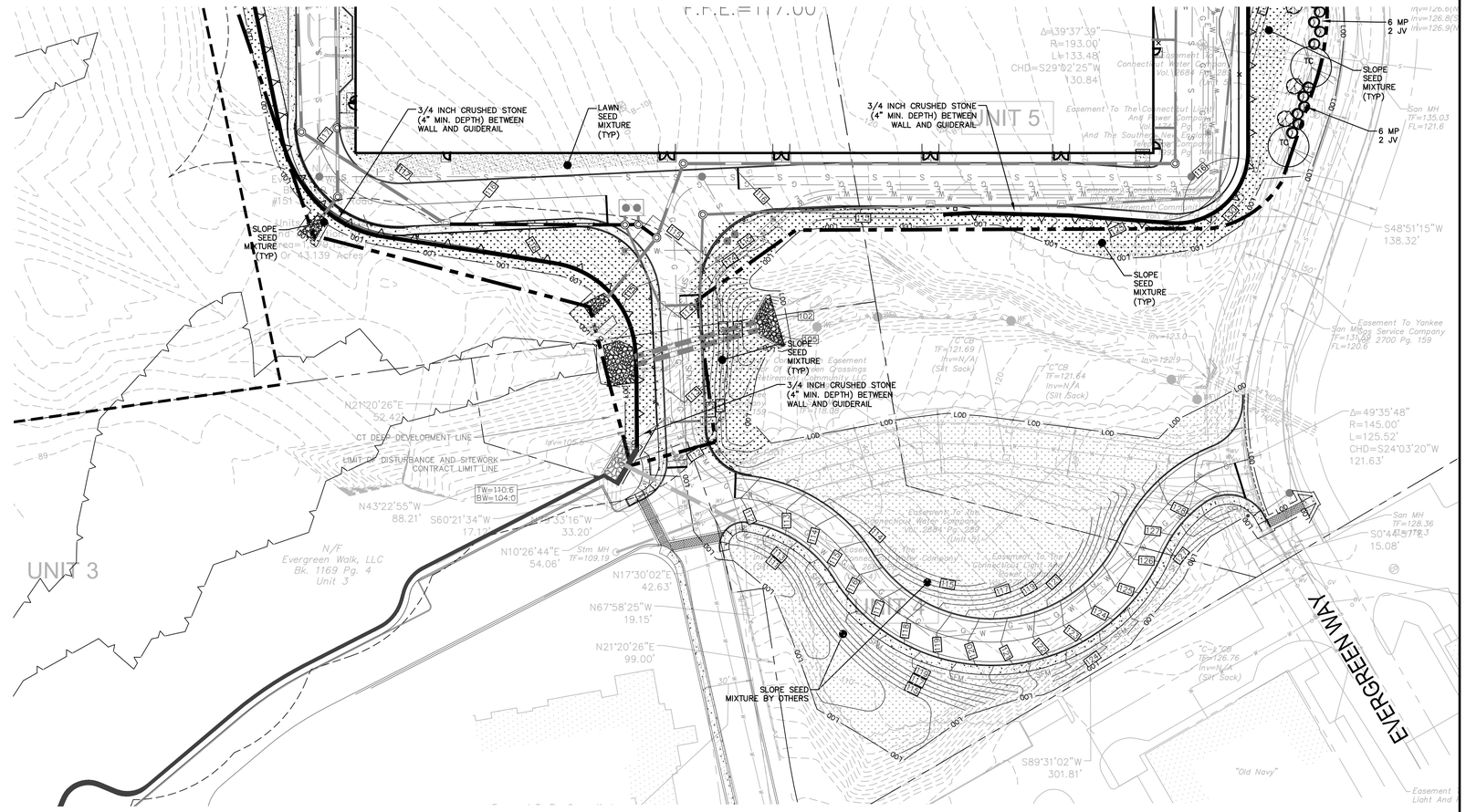

PLANT SCHEDULE

DECIDUOUS TREES

KEY	QUANTITY	BOTANICAL NAME	COMMON NAME	ROOT	SIZE	SPACING	COMMENTS
ARF	30	Acer rubrum 'Autumn Flame'	AUTUMN FLAME RED MAPLE	B&B	3"–3.5" CALIPER	AS SHOWN	7FT MIN. BRANCHING HEIGHT
GT	22	Gledestia triacanthos f. inermis 'Skycole'	SKYLINE HONEYLOCUST	B&B	3"–3.5" CALIPER	AS SHOWN	7FT MIN. BRANCHING HEIGHT
ZSG	28	Zelkova serrata 'Green Vase'	GREEN VASE JAPANESE ZELKOVA	B&B	3"–3.5" CALIPER	AS SHOWN	7FT MIN. BRANCHING HEIGHT
TC	9	Tilia cordata 'Greenspire'	GREENSPIRE LITTLE LEAF LINDEN	B&B	3"–3.5" CALIPER	AS SHOWN	7FT MIN. BRANCHING HEIGHT
TOTAL	89						

FLOWERING TREES

KEY	QUANTITY	BOTANICAL NAME	COMMON NAME	ROOT	SIZE	SPACING	COMMENTS
MJ	9	Malus 'Jarmin'	MARILEE FRUITLESS CRABAPPLE	B&B	2"–2.5" CALIPER	AS SHOWN	7FT MIN. BRANCHING HEIGHT
AC	8	Amelanchier x grandiflora 'Autumn Brilliance'	AUTUMN BRILLIANCE SERVICEBERRY	B&B	8'–10' HT.	AS SHOWN	MULTI–STEM

EVERGREEN TREES

KEY	QUANTITY	BOTANICAL NAME	COMMON NAME	ROOT	SIZE	SPACING	COMMENTS
JV	21	Juniperus virginiana	EASTERN RED CEDAR	CONT.	6'–7' HEIGHT	AS SHOWN	
PPF	9	Picea pungens 'Fat Albert'	FAT ALBERT BLUE SPRUCE	B&B	7'–8' HEIGHT	AS SHOWN	SINGLE LEADER ONLY
PST	6	Pinus strobus	EASTERN WHITE PINE	B&B	10'–12' HEIGHT	AS SHOWN	SEMI SHEARED
TPG	15	Thuja plicata 'Green Giant'	GREEN GIANT ARBORVITAE	B&B	7'–8' HEIGHT	AS SHOWN	SINGLE LEADER ONLY

UNDERSTORY (SHRUBS, GRASSES, GROUNDCOVERS)

KEY	QUANTITY	BOTANICAL NAME	COMMON NAME	ROOT	SIZE	SPACING	COMMENTS
PV	276	Panicum virgatum 'Shenandoah'	SHENANDOAH SWITCHGRASS	CONT.	30"–36" HEIGHT	36" O.C.	
CS	84	Cornus stolonifera 'Farrow'	ARTIC FIRE RED TWIG DOGWOOD	CONT.	24"–30" HEIGHT	36" O.C.	
HH	172	Hemerocallis spp.	DAYLILY (3 VARIETIES/COLORS)	CONT.	18"–24" HEIGHT	24" O.C.	3 COLOR VARIETIES
IG	120	Ilex glabra 'Shamrock'	SHAMROCK INKBERRY	CONT.	24"–36" HEIGHT	36" O.C.	
JC	264	Juniperus chinensis 'Sargentii'	SARGENT'S JUNIPER	CONT.	12"–18" HEIGHT	36" O.C.	
JP	162	Juniperus chinensis 'Pfitzeriana Compacta'	COMPACT PFITZER JUNIPER	CONT.	18"–24" HEIGHT	36" O.C.	
MP	76	Myrica pensylvanica	NORTHERN BAYBERRY	CONT.	36"–42" HEIGHT	6'	
PA	104	Pennisetum alopecuroides	FOUNTAIN GRASS	CONT.	18"–24" HEIGHT	36" O.C.	

NOTE:
REFER TO SHEET LL–3 FOR LANDSCAPE DETAILS AND NOTES

LEGEND

- DECIDUOUS TREE (SPECIES AS NOTED)
- EVERGREEN TREE (SPECIES AS NOTED)
- SHRUB (SPECIES AS NOTED)
- ORNAMENTAL GRASS (SPECIES AS NOTED)
- GROUNDCOVER
- LAWN SEED MIXTURE
- SLOPE SEED MIXTURE

FOR PERMITTING PURPOSES ONLY
NOT RELEASED FOR CONSTRUCTION

GRAPHIC SCALE
40 20 0 40
SCALE IN FEET

Architecture
Engineering
Environmental
Land Surveying
BL Companies
100 Constitution Plaza, 10th Floor
Hartford, CT 06103
(860) 249-2200
(860) 249-2400 Fax

STATE OF CONNECTICUT
MICHELLE M. CARSON
No.20951
LICENSED PROFESSIONAL ENGINEER

PROPOSED DEVELOPMENT
EVERGREEN WALK - UNIT 12
151 BUCKLAND ROAD
SOUTH WINDSOR, CONNECTICUT

REVISIONS		
No.	Date	Desc.
1	01/06/2020	DRAINAGE MODIFICATION
2	08/14/2020	PLANNING AND ZONING SUBMISSION
3	10/20/2020	RESPONSE TO COMMENTS

Designed	L.M.W.
Drawn	L.M.W.
Reviewed	
Scale	1"=40'
Project No.	13C4718
Date	09/18/2019
CAD File: LL13C471801	

Title
LANDSCAPE PLAN

Sheet No.
LL-2

Xref (s): BD13C471801 ; XC13C471803 ; XC13C471802 ; XC13C471803 ; XC13C471801 ; XC13C471804 ; XV13C471801-Harborchase

12/29/2020, KNIGHTS, G:\JOBS\13\13C\13C4718\DWGS\LL13C471801.DWG-LL-2 24X36 48GC

© 2020 BL COMPANIES, INC. THESE DRAWINGS SHALL NOT BE UTILIZED BY ANY PERSON, FIRM OR CORPORATION WITHOUT THE SPECIFIC WRITTEN PERMISSION OF BL COMPANIES.

REFER TO SHEET GN-1 FOR SITE WORK GENERAL NOTES

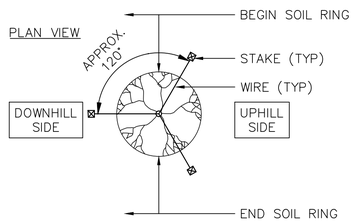

STAKING NOTES:
1.) ALL TREES PLANTED ON SLOPES 4:1 OR GREATER SHALL BE STAKED AS SHOWN. (TREES PLANTED IN LOCATIONS WITH LESS THAN 4:1 SLOPES DO NOT REQUIRE STAKING)

2.) THE WOOD STAKES SHALL BE CONSTRUCTION GRADE, ROUGH OR DRESSED, OF SOUND WOOD, DECAY RESISTANT, AND OF THE SIZE INDICATED IN THE DETAILS.

3.) THE WIRE TIES SHALL BE 12 OR 14 GAUGE GALVANIZED WIRE, AND BE PROVIDED WITH A ONE FOOT PIECE OF RUBBER HOSE PLACED TO PREVENT INJURY TO THE BARK.

4.) STAKE LAYOUT TO BE COORDINATED WITH SITE GRADING

TREE STAKING

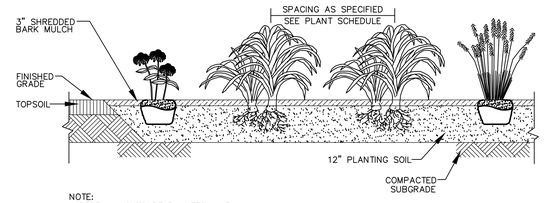

NOTE:
1 PERENNIALS TO BE PLANTED IN FALL.

2 DO NOT OVER COMPACT PLANTING BED. WATER THOROUGHLY AFTER PLANTING BULBS.

3 ADJUST PLANTING DEPTH AS RECOMMENDED BY BULB SUPPLIER.

ANNUAL/PERENNIAL AND GROUNDCOVER BEDS

N.T.S.

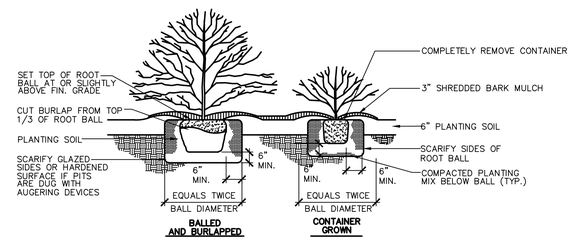

NOTE:
IN AREAS OF MASS PLANTING, CONTINUOUSLY EXCAVATE AND MULCH ENTIRE BED.

SHRUB PLANTING

N.T.S.

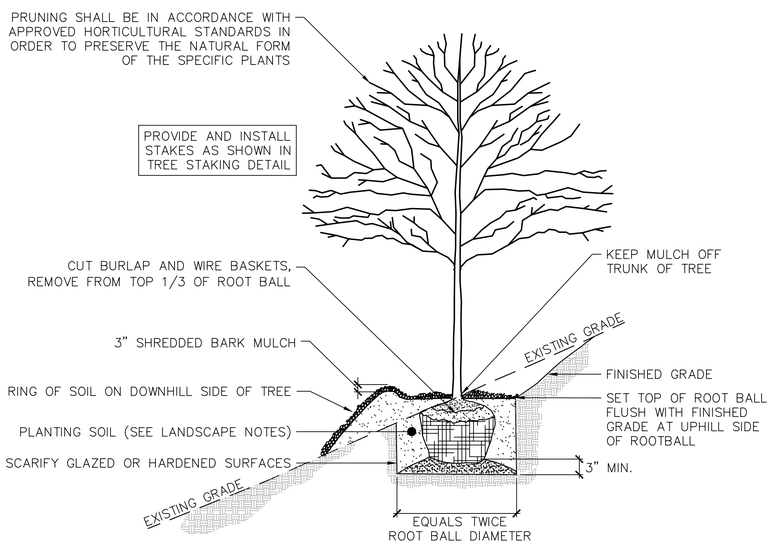

NOTE:
PLANTING DETAIL SHALL APPLY FOR ALL DECIDUOUS AND EVERGREEN TREES AND SHRUBS PLANTED IN LOCATIONS WITH 4:1 SLOPES OR GREATER

SLOPE TREE PLANTING

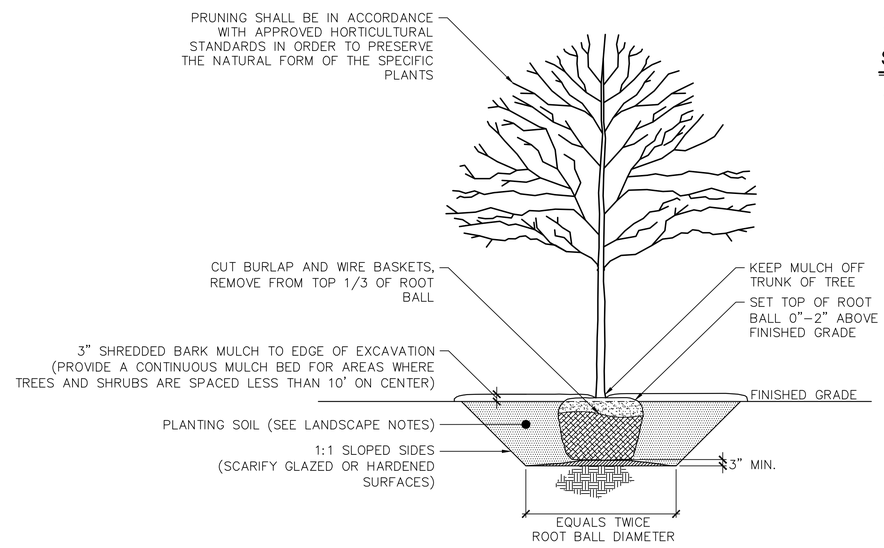

NOTE:
PLANTING DETAIL SHALL APPLY FOR ALL DECIDUOUS AND EVERGREEN TREES AND SHRUBS PLANTED IN LOCATIONS WITH 4:1 SLOPES OR LESS

TREE PLANTING

LANDSCAPE NOTES

1. THE LANDSCAPE PLAN AND DETAIL SHEET ARE FOR LANDSCAPING INFORMATION ONLY. REFER TO THE SITE PLAN, THE GRADING AND DRAINAGE PLAN, AND THE UTILITIES PLAN FOR ALL OTHER INFORMATION.

2. PLANTING LOCATIONS ARE APPROXIMATE AND ARE SUBJECT TO FIELD ADJUSTMENT DUE TO UTILITY LOCATIONS AND SITE CONDITIONS. CONTRACTOR SHALL LAY OUT THE WORK FOR THE REVIEW, ADJUSTMENT, AND APPROVAL OF OWNER OR LANDSCAPE ARCHITECT PRIOR TO PLANTING.

3. UTILITY LOCATIONS SHOWN IN THE DRAWINGS ARE APPROXIMATE. EXERCISE CARE WHEN DIGGING IN AREAS OF POTENTIAL CONFLICT WITH UNDERGROUND OR OVERHEAD UTILITIES. THE CONTRACTOR IS RESPONSIBLE FOR ANY DAMAGE DUE TO CONTRACTOR'S NEGLIGENCE AND SHALL REPLACE OR REPAIR ANY DAMAGE AT CONTRACTOR'S EXPENSE.

4. NO PLANT SHALL BE PLACED IN THE GROUND BEFORE ROUGH GRADING HAS BEEN COMPLETED.

5. TOPSOIL SHALL BE INSTALLED AT A MINIMUM DEPTH OF 4". CONTRACTOR SHALL SUBMIT SAMPLES FROM EACH PROPOSED TOPSOIL SOURCE TO A CERTIFIED TESTING LABORATORY TO DETERMINE pH, FERTILITY, ORGANIC CONTENT AND MECHANICAL COMPOSITION. CONTRACTOR SHALL SUBMIT THE TEST RESULTS TO OWNER OR LANDSCAPE ARCHITECT FOR REVIEW. CONTRACTOR SHALL INCORPORATE AMENDMENTS FOR PROPER SOIL pH AND PLANT GROWTH AS RECOMMENDED BY TEST REPORTS AT NO INCREASE IN CONTRACT PRICE.

6. PLANTING SOIL SHALL BE COMPRISED OF 3 PARTS NATIVE SOIL, 1 PART SCREENED TOPSOIL, AND 1 PART PEAT MOSS.

7. THE CONTRACTOR SHALL SUPPLY ALL LABOR, PLANTS, AND MATERIALS IN QUANTITIES SUFFICIENT TO COMPLETE THE WORK SHOWN ON THE DRAWINGS AND LISTED IN THE PLANT SCHEDULE. WHEN QUANTITIES LISTED IN THE PLANT SCHEDULE DIFFER FROM THOSE REQUIRED BY THE DRAWINGS, THE LARGER QUANTITY SHALL BE USED.

8. LANDSCAPE PLANTING PITS MUST BE FREE DRAINING. PAVEMENT, COMPACTED SOIL, AND BLASTED ROCK SHALL BE REMOVED FROM PLANTING PITS AND LANDSCAPE AREAS TO A DEPTH OF 2' OR TO A GREATER DEPTH IF REQUIRED BY PLANTING DETAILS OR SPECIFICATIONS. REMOVE STONES AND DEBRIS 1" OR GREATER IN DIAMETER AND ALL OTHER MATERIAL HARMFUL TO PLANT DEVELOPMENT.

9. PLANT REQUIREMENTS: ALL PLANTS SHALL CONFORM IN SIZE AND GRADE TO THE AMERICAN STANDARD FOR NURSERY STOCK, ANSI Z60.1 (LATEST EDITION). ALL PLANTS SHALL MEET THE ADDITIONAL REQUIREMENTS SET FORTH BELOW AND IN WRITTEN SPECIFICATIONS AS APPLICABLE. ALL TREES AND SHRUBS SHALL HAVE BEEN GROWN AT A COMMERCIAL NURSERY WITHIN 200 MILES OF THE PROJECT SITE UNLESS OTHERWISE APPROVED BY OWNER OR LANDSCAPE ARCHITECT. THEY SHALL BE TYPICAL OF THEIR SPECIES OR VARIETY. THEY SHALL BE HEALTHY, SYMMETRICAL, EVENLY AND DENSELY BRANCHED, AND DENSELY FOLIATED WHEN IN LEAF. THEY SHALL BE FREE OF BARK INJURY, DISEASE, AND INSECT PESTS. ALL TREES SHALL HAVE A STRAIGHT TRUNK WITH A SINGLE MAIN LEADER UNLESS OTHERWISE CHARACTERISTIC OF THE SPECIES OR VARIETY. THE OWNER OR LANDSCAPE ARCHITECT WILL ALLOW SUBSTITUTIONS ONLY UPON WRITTEN APPROVAL. SIZES SHALL CONFORM TO THE MEASUREMENT SPECIFIED ON THE DRAWINGS. PLANTS LARGER THAN SPECIFIED MAY BE USED IF APPROVED. THE USE OF SUCH PLANTS SHALL NOT INCREASE THE CONTRACT PRICE. ALL OVERSTORY TREES PLANTED ALONG PARKING AREAS, SIDEWALKS AND PEDESTRIAN ACCESSES SHALL NOT BRANCH BELOW 6' FEET IF THE TREE CALIPER IS 2 1/2" INCHES OR GREATER. ALL PLANT MATERIALS ARE SUBJECT TO INSPECTION AND ACCEPTANCE BY THE OWNER OR LANDSCAPE ARCHITECT AT THE NURSERY SOURCE. THE CONTRACTOR SHALL COORDINATE SOURCE VISITS WITH THE LANDSCAPE ARCHITECT AND SHALL ACCOMPANY THE OWNER AND/OR LANDSCAPE ARCHITECT FOR ALL INSPECTIONS. CERTIFICATES OF COMPLIANCE WITH SPECIFICATIONS ARE REQUIRED FOR ALL PLANTS.

10. ALL PLANT BEDS SHALL BE MULCHED TO THE DEPTH INDICATED ON THE DETAILS. USE UNCOLORED, SHREDDED BARK MULCH AGED AT LEAST SIX MONTHS FOR ALL BEDS.

11. GUARANTEE: GUARANTEE ALL PLANTS AND LAWNS FOR A MINIMUM OF 1 YEAR TO BE ALIVE AND IN VIGOROUS GROWING CONDITION AT THE END OF THE GUARANTEE PERIOD. THE GUARANTEE PERIOD FOR ALL PLANTS SHALL BEGIN UPON APPROVAL AS SPECIFIED UNDER SEMI–FINAL ACCEPTANCE. PLANT MATERIALS AND LAWNS APPROVED IN THE SPRING SHALL BE ALIVE AND IN SATISFACTORY GROWTH ON JUNE 1 OF THE FOLLOWING YEAR; PLANTING DONE IN LATE FALL (AFTER NOVEMBER 1ST) SHALL BE MAINTAINED AND GUARANTEED UNTIL THE SECOND SPRING'S LEAFING. REPLACEMENTS: ALL PLANTS SHALL BE FREE OF DEAD OR DYING BRANCHES AND BRANCH TIPS, AND SHALL BEAR FOLIAGE OF A NORMAL DENSITY, SIZE AND COLOR. PROMPTLY REMOVE DEAD, UNSIGHTLY, UNHEALTHY, OR EXCESSIVELY PRUNED PLANTS. THESE AND ANY PLANTS MISSING DUE TO THE CONTRACTOR'S NEGLIGENCE, SHALL BE REPLACED OR ADDED WITH THE SAME KIND AND SIZE AS ORIGINALLY SPECIFIED AS SOON AS CONDITIONS PERMIT. METHOD OF REPLACEMENT SHALL BE THE SAME AS SPECIFIED FOR THE ORIGINAL PLANTING WITH REPLACEMENTS MATCHING ADJACENT SPECIMENS OF THE SAME SPECIES. REPLACEMENTS SHALL BE MADE AS MANY TIMES AS NECESSARY TO ENSURE HEALTHY PLANTS AND THEY SHALL BE MAINTAINED AND GUARANTEED. REPLACEMENTS SHALL BE MADE AT THE CONTRACTOR'S EXPENSE AND SHALL BE GUARANTEED FOR ONE FULL YEAR FROM TIME OF REPLACEMENT.

12. ALL SLOPES EQUAL TO OR STEEPER THAN 4:1 RECEIVING A LAWN SEED MIXTURE SHALL BE COVERED WITH AN EROSION CONTROL BLANKET OF STRAW FIBER AND BIODEGRADABLE OR PHOTODEGRADABLE NETTING.

13. ALL DISTURBED AREAS NOT OTHERWISE DEVELOPED SHALL BE SEEDED WITH THE LAWN SEEDING MIXTURE.

14. IF SHEET IS LESS THAN 24" X 36" IT IS A REDUCED PRINT AND SHOULD BE SCALED ACCORDINGLY.

15. REFER TO PROJECT SPECIFICATIONS MANUAL FOR ADDITIONAL INFORMATION.

SEEDING MIXTURES

A. LAWN SEED MIXTURE:
15 % PERENNIAL RYEGRASS (BLEND OF 3 IMPROVED HYBRIDS)
25 % FINE LEAF OR CREEPING FESCUE (BLEND OF 3 IMPROVED HYBRIDS)
60 % KENTUCKY BLUEGRASS (BLEND OF 3 IMPROVED HYBRIDS)
SEEDING RATE: 5 LBS/1,000 S.F.
SEEDING DATES: AUGUST 15 – OCTOBER 1 AND APRIL 15 – JUNE 15, UNLESS OTHERWISE APPROVED BY OWNER.

B. SLOPE SEED MIXTURE (3:1 SLOPES OR GREATER)
CREEPING RED FESCUE (FESTUCA RUBRA) (42%)
EXPRESS PERENNIAL RYEGRASS (LOLIUM PERENNE) (34%)
BIRDSFOOT TREFOIL* (LOTUS CORNICULTUS VAR. ARVENSIS) (8%)
ALSIKE CLOVER (TRIFOLIUM HYBRIDUM) (8%)
RED TOP (AGROSTIS GIGANTEA) (8%)
LEGUMINOUS SEED TO BE INOCULATED
PURE LIVE SEED: 96–98%
APPLICATION RATE: 3 LBS/1000 SF.
FERTILIZER TYPE: 10–20–20
FERTILIZER RATE OF APPLICATION: 400 LBS/ACRE
LIMING RATE: 500 LBS/ACRE (PULVERIZED AGRI. LIMESTONE)
MULCH TYPE: WOOD CELLULOSE FIBER
MULCH RATE: 1400 LBS/ACRE
ANCHOR MATERIAL: EC3000 COPOLYMER TACKIFIER
ANCHORING METHOD: SLURRY, MIX AND SPRAY
ANCHORING RATE OF APPLICATION: 3 LBS/ACRE
SEEDING SEASON DATES: MARCH 1–MAY 15 AND SEPT. 1–OCTOBER 15

FOR PERMITTING PURPOSES ONLY
NOT RELEASED FOR CONSTRUCTION

Architecture
Engineering
Environmental
Land Surveying
BL Companies
100 Constitution Plaza, 10th Floor
Hartford, CT 06103
(860) 249-2200
(860) 249-2400 Fax

STATE OF CONNECTICUT
MICHELLE M. CARLSON
No.20951
LICENSED
PROFESSIONAL ENGINEER

PROPOSED DEVELOPMENT
EVERGREEN WALK - UNIT 12
151 BUCKLAND ROAD
SOUTH WINDSOR, CONNECTICUT

REVISIONS

No.	Date	Desc.
1	01/06/2020	DRAINAGE MODIFICATION
2	08/14/2020	PLANNING AND ZONING SUBMISSION
3	10/20/2020	RESPONSE TO COMMENTS

Designed	L.M.W.
Drawn	L.M.W.
Reviewed	
Scale	1"=40'
Project No.	13C4718
Date	09/18/2019
CAD File: LL13C471801	

Title
LANDSCAPE DETAILS

Sheet No.
LL-3

Xref (s): : BD13C471801 ; XC13C471801 ; XZ13C471803 ; XC13C471802 ; XC13C471803 ; XL13C471801 ; XC13C471804 ; XY13C471801 ; XO13C471801-Hydrochase

10/20/2020, KAILEGAS, G:\JOBS13\13C\13C4718\DWG\LL13C471801.DWG,LL-3 24X36,1:1

© 2020 BL COMPANIES, INC. THESE DRAWINGS SHALL NOT BE UTILIZED BY ANY PERSON, FIRM OR CORPORATION WITHOUT THE SPECIFIC WRITTEN PERMISSION OF BL COMPANIES.

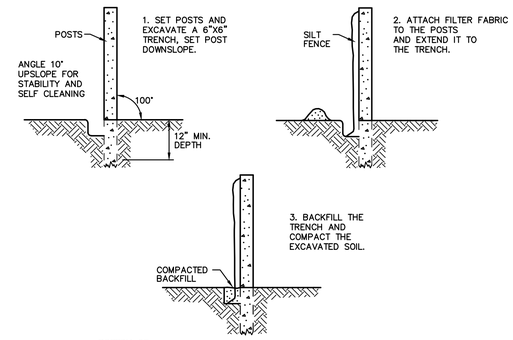

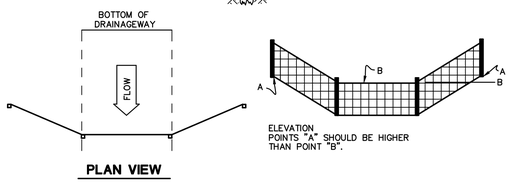

SILT FENCE BARRIER

N.T.S. CTEC-003

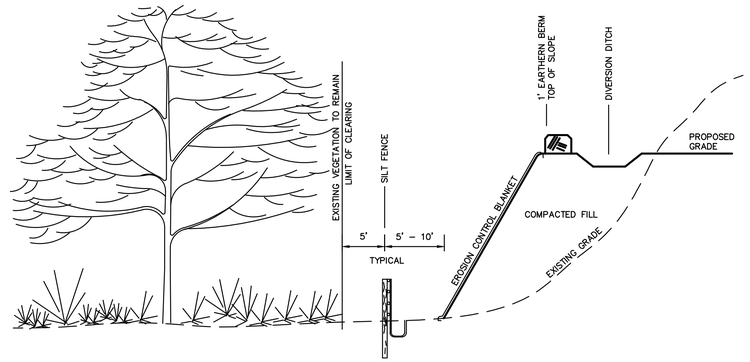

TYPICAL EROSION CONTROL ON SLOPES

N.T.S. BLEC-011

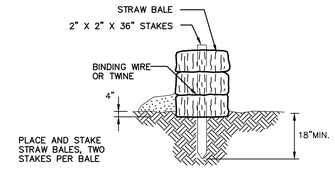

STRAW BALE BARRIERS SHOULD NOT BE USED FOR MORE THAN 3 MONTHS

SEDIMENT MUST BE REMOVED WHEN ACCUMULATIONS REACH 1/3 THE ABOVE GROUND HEIGHT OF THE BARRIER.

ANY SECTION OF STRAW BALE BARRIER WHICH HAS BEEN UNDERMINED OR TOPPED MUST BE IMMEDIATELY REPLACED WITH A ROCK FILTER OUTLET.

STRAW BALE BARRIER

N.T.S. BLEC-007

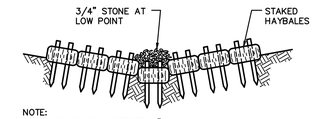

NOTE:
HAYBALES TO BE IMBEDDED 4" INTO EXISTING GROUND
(TYPICAL ALL CASES)

SEDIMENT CHECK DAM

N.T.S. CTEC-004

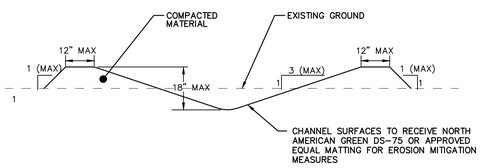

NON-ENGINEERED TEMPORARY DIVERSION SWALE DETAIL

N.T.S.

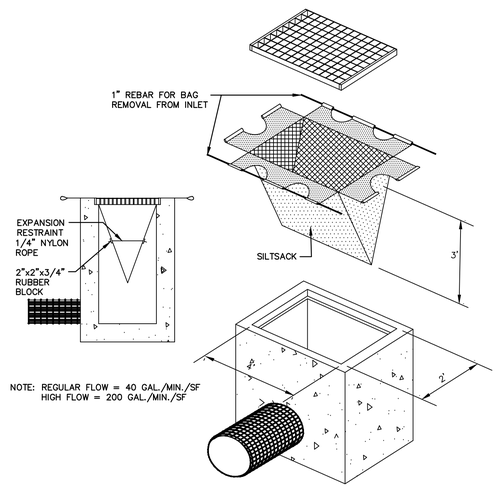

SILT SACK

N.T.S.

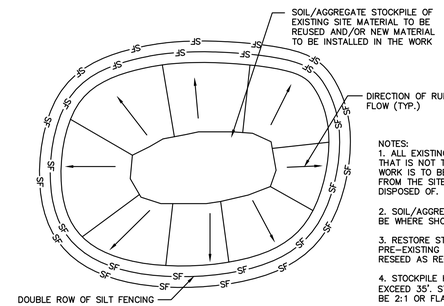

NOTES:
1. ALL EXISTING EXCAVATED MATERIAL THAT IS NOT TO BE REUSED IN THE WORK IS TO BE IMMEDIATELY REMOVED FROM THE SITE AND PROPERLY DISPOSED OF.

2. SOIL/AGGREGATE STOCKPILE SITES TO BE WHERE SHOWN ON THE DRAWINGS.

3. RESTORE STOCKPILE SITES TO PRE-EXISTING PROJECT CONDITION AND RESEED AS REQUIRED.

4. STOCKPILE HEIGHTS MUST NOT EXCEED 35'. STOCKPILE SLOPES MUST BE 2:1 OR FLATTER.

MATERIALS STOCKPILE DETAIL

N.T.S. BLEC-006

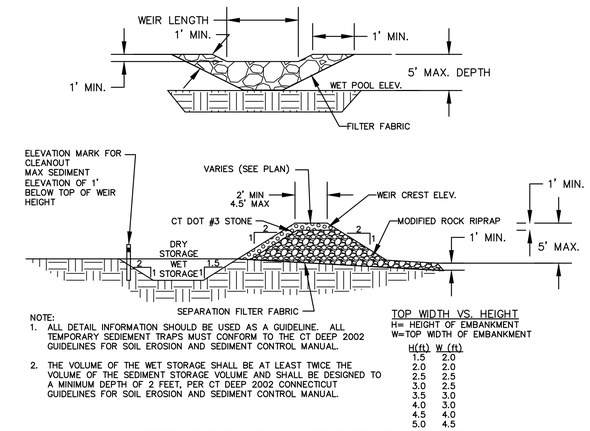

NOTE:
1. ALL DETAIL INFORMATION SHOULD BE USED AS A GUIDELINE. ALL TEMPORARY SEDIEMENT TRAPS MUST CONFORM TO THE CT DEEP 2002 GUIDELINES FOR SOIL EROSION AND SEDIMENT CONTROL MANUAL.

2. THE VOLUME OF THE WET STORAGE SHALL BE AT LEAST TWICE THE VOLUME OF THE SEDIMENT STORAGE VOLUME AND SHALL BE DESIGNED TO A MINIMUM DEPTH OF 2 FEET, PER CT DEEP 2002 CONNECTICUT GUIDELINES FOR SOIL EROSION AND SEDIMENT CONTROL MANUAL.

TOP WIDTH VS. HEIGHT
H= HEIGHT OF EMBANKMENT
W=TOP WIDTH OF EMBANKMENT

H(ft)	W (ft)
1.5	2.0
2.0	2.0
2.5	2.5
3.0	2.5
3.5	3.0
4.0	3.0
4.5	4.0
5.0	4.5

TEMPORARY SEDIMENT TRAP

N.T.S. BLEC-002

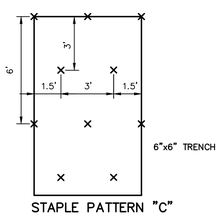

STAPLE PATTERN "C"

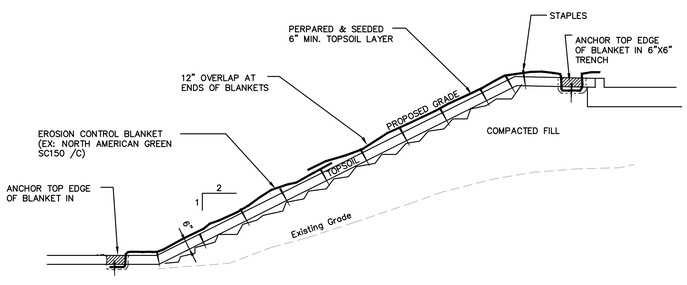

EROSION CONTROL BLANKET ON FILL SLOPE

N.T.S. BLEC-009

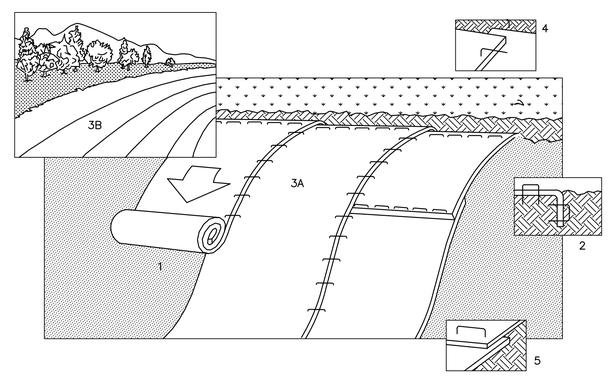

1. PREPARE SOIL BEFORE INSTALLING BLANKETS, INCLUDING APPLICATION OF LIME, FERTILIZER,AND SEED.

2. BEGIN AT THE TOP OF THE SLOPE BY ANCHORING THE BLANKET IN 6" DEEP X 6" WIDE TRENCH. BACKFILL AND COMPACT THE TRENCH AFTER STAPLING.

3. ROLL THE BLANKETS (A.) DOWN OR (B.) HORIZONTALLY ACROSS THE SLOPE.

4. THE EDGES OF PARALLEL BLANKETS MUST BE STAPLED WITH APPROXIMATELY 2" OVERLAP.

5. WHEN BLANKETS MUST BE SPLICED DOWN THE SLOPE, PLACE BLANKETS END OVER END (SHINGLE STYLE) WITH APPROXIMATELY 4" OVERLAP. STAPLE THROUGH OVERLAPPED AREA, APPROXIMATELY 12" APART.

SLOPE STABILIZATION DETAIL

N.T.S. BLEC-010

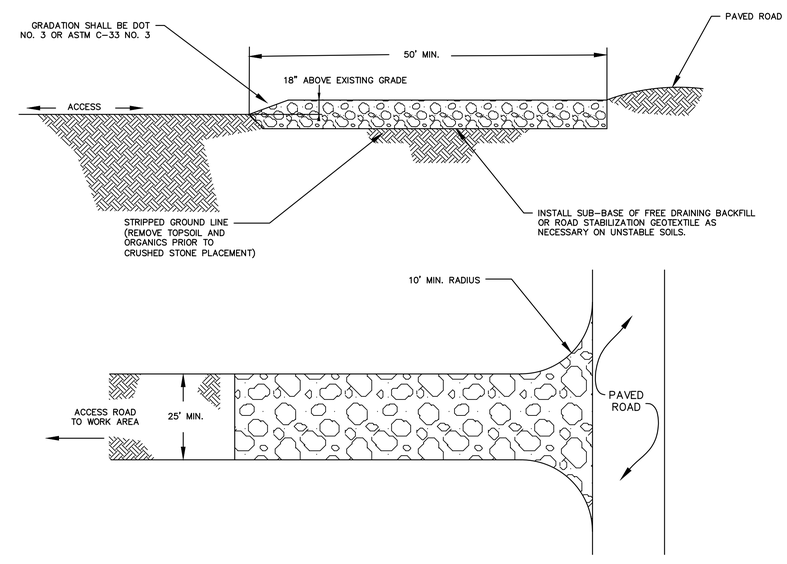

TYPICAL CONSTRUCTION ENTRANCE

N.T.S. CT DEEP CE-2

FOR PERMITTING PURPOSES ONLY
NOT RELEASED FOR CONSTRUCTION

Architecture
Engineering
Environmental
Land Surveying

BL Companies

100 Constitution Plaza, 10th Floor
Hartford, CT 06103
(860) 249-2200
(860) 249-2400 Fax

STATE OF CONNECTICUT
MICHELLE M. CARLSON
No.20951
LICENSED
PROFESSIONAL ENGINEER

PROPOSED DEVELOPMENT
EVERGREEN WALK - UNIT 12
151 BUCKLAND ROAD
SOUTH WINDSOR, CONNECTICUT

REVISIONS

No.	Date	Desc.
1	01/06/2020	DRAINAGE MODIFICATION
2	08/14/2020	REVISED PER DEEP SUBMISSION
3	10/20/2020	RESPONSE TO COMMENTS

Designed	J.A.B.
Drawn	S.E.L.
Reviewed	
Scale	N.T.S.
Project No.	13C4718
Date	09/18/2019
CAD File: DN13C471801	

Title
SITE DETAILS

Sheet No.
DN-1

© 2020 BL COMPANIES, INC. THESE DRAWINGS SHALL NOT BE UTILIZED BY ANY PERSON, FIRM OR CORPORATION WITHOUT THE SPECIFIC WRITTEN PERMISSION OF BL COMPANIES.

10/20/2020, KRIZGISS, O:\JOBS\T\13C\13C4718\DWG\DN13C471801.DWG\DN1 24X36.PTS

Xref (s): - BD13C471801

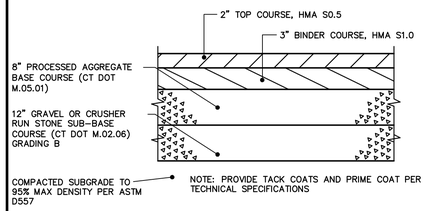

HEAVY DUTY BITUMINOUS CONCRETE PAVEMENT STRUCTURE

SCALE: NTS ZPC-006

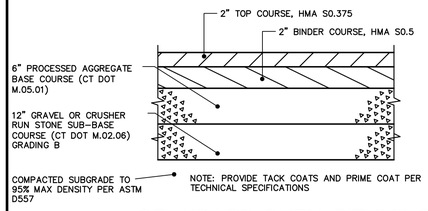

STANDARD DUTY BITUMINOUS CONCRETE PAVEMENT STRUCTURE

SCALE: NTS ZPC-006

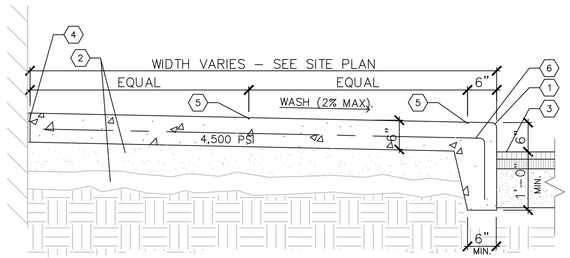

KEYED NOTES

1. 1/2" RADIUS
2. 6" AGGREGRATE CTDOT M.05.01 12" AGGREGRATE CTDOT M.02.06 B
3. PAVEMENT.
4. COMPRESSIBLE FILLER (3/4" MAXIMUM). CUT BACK AND PROVIDE SEALANT, TYPICAL, AT ALL JOINTS WITH FILLER.
5. 1/4" TOOLED JOINT
6. 6" X 6" W2.1 X 2.1 W.W.F.

NOTE: EXPANSION JOINT 20' O.C. MAXIMUM. 1/4" TOOL JOINT 5' O.C. OR AS DIRECTED. CONCRETE TO BE 4,000 P.S.I.

MONOLITHIC CONCRETE CURB AND SIDEWALK DETAIL

N.T.S.

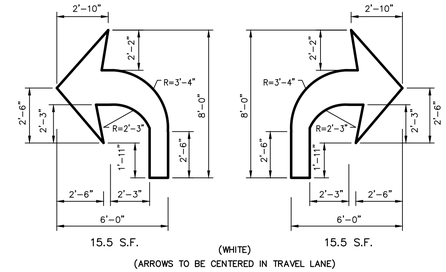

PAVEMENT ARROW DETAILS

SCALE: NTS BLPC-006

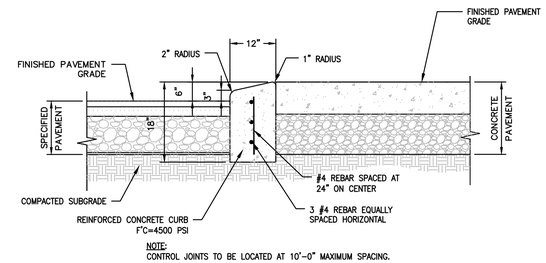

NOTE:
CONTROL JOINTS TO BE LOCATED AT 10'-0" MAXIMUM SPACING.

MOUNTABLE CONCRETE CURB

N.T.S

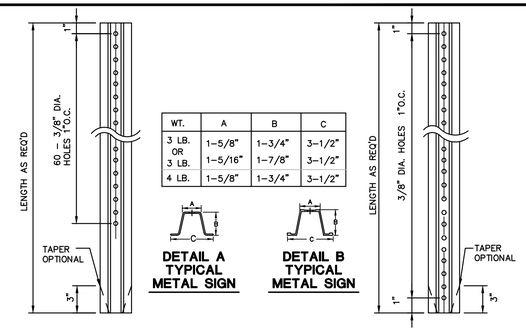

WT.	A	B	C
3 LB. OR 3 LB.	1–5/8"	1–3/4"	3–1/2"
	1–5/16"	1–7/8"	3–1/2"
4 LB.	1–5/8"	1–3/4"	3–1/2"

NOTES:
1. STEEL FOR POSTS SHALL CONFORM TO THE MECHANICAL REQUIREMENTS OF ASTM A 499–81 GRADE 60 AND TO THE CHEMICAL REQUIREMENTS OF ASTM AI–76 CARBON STEEL TEE RAIL HAVING NOMINAL WEIGHT OF "91 LBS OR GREATER PER LINEAR YARD.
2. AFTER FABRICATION ALL STEEL POSTS SHALL BE GALVANIZED TO MEET THE REQUIREMENTS OF ASTM A–123.
3. SIGN MOUNTING HEIGHT TO BE APPROVED BY THE ENGINEER.
4. ALL SIGNS IN STATE ROW TO MEET CTDOT SPECIFICATIONS FOR BREAKAWAY SIGNS. SEE CTDOT STANDARD DETAIL SHEET 'TYPICAL METAL SIGN POSTS AND SIGN MOUNTING DETAILS' AND CTDOT FORM 817

TYPICAL METAL SIGN POSTS

SCALE: NTS BLSD–001

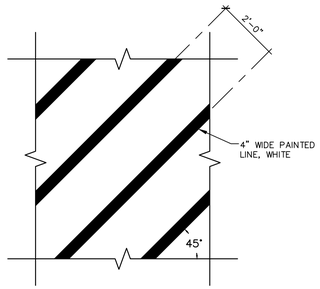

PAINTED STRIPE

SCALE: NTS 0910

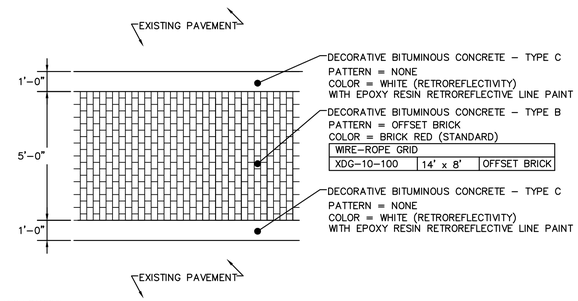

TEST SAMPLE:
CONTRACTOR SHALL PROVIDE A 6'x6' CONSTRUCTED SAMPLE OF DECORATIVE PAVEMENT FOR EACH COLOR, AND PATTERN FOR APPROVAL BY ENGINEER.

NOTES:
1. INSTALLATION TO BE COMPLETED IN ACCORDANCE WITH MANUFACTURER'S SPECIFICATIONS.
2. TOWN AND ENGINEER SHALL APPROVE PATTERN, TEXTURE, AND COLOR PRIOR TO INSTALLATION.

DECORATIVE BITUMINOUS CONCRETE CROSSWALK PATTERN / LAYOUT

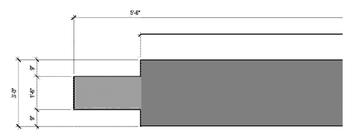

DIRECTIONAL ARROW

SCALE: NTS

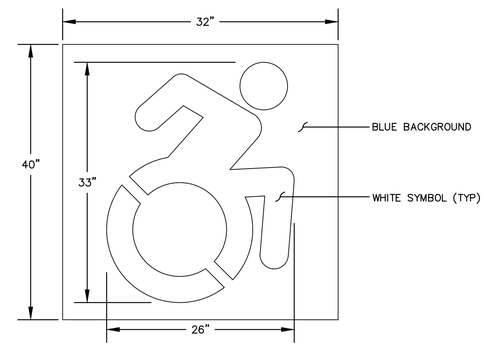

NOTE: HANDICAP SYMBOL TO ADHERE TO STATE BUILDING CODE, LATEST EDITION

CONNECTICUT ACCESSIBLE PARKING SYMBOL

SCALE: NTS

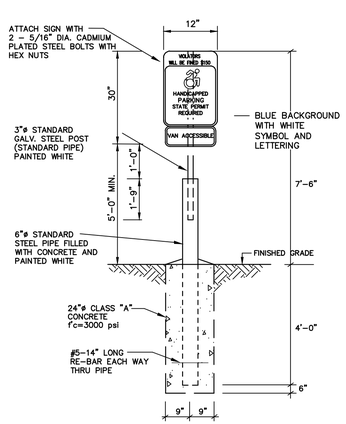

NOTE: HANDICAP SYMBOL TO ADHERE TO STATE BUILDING CODE, LATEST EDITION

HANDICAP SIGN BOLLARD DETAIL

N.T.S.

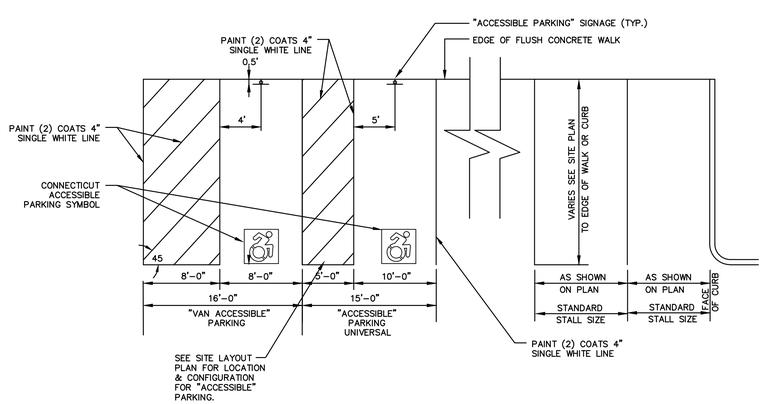

TYPICAL ACCESSIBLE AND STANDARD PARKING SPACES

SCALE: NTS 1210

NOTE:
1. SIDEWALK RAMPS SHALL HAVE THE FINAL TEXTURE OF THE RAMP SURFACE BE A COARSE BROOM FINISH TRANSVERSE TO THE SLOPE OF THE RAMP.
2. CARE SHALL BE TAKEN TO ASSURE A UNIFORM GRADE ON THE RAMP, FREE OF SAGS AN SHORT GRAD CHANGES.
3. THE BOTTOM OF THE RAMP SHALL MEET THE GUTTER LINE AT THE CURB FACE.
4. ALL RAMPS MUST INCLUDE A DETECTABLE WARNING STRIP SEE DETAIL.

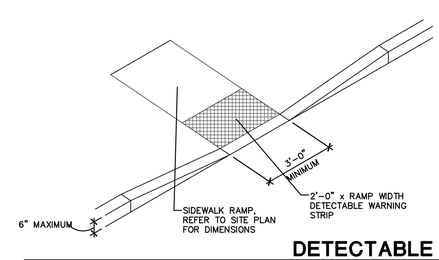

NOTE:
DETECTABLE WARNING SYSTEM MUST BE PRESENT ON SURFACE OF RAMP WHEN SLOPE OF RAMP IS BETWEEN 5.0% AND 8.33% AND AT RAISED SIDEWALKS ADJACENT TO TRAVELWAY

EDGES MUST BE TAPERED WHERE TRUNCATED DOME PLATES ARE EXPOSED

TYPICAL SECTION A-A

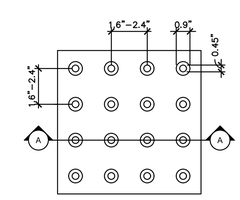

TYPICAL PLAN

DETECTABLE WARNING STRIP

SCALE: NTS 0108

FOR PERMITTING PURPOSES ONLY
NOT RELEASED FOR CONSTRUCTION

© 2020 BL COMPANIES, INC. THESE DRAWINGS SHALL NOT BE UTILIZED BY ANY PERSON, FIRM OR CORPORATION WITHOUT THE SPECIFIC WRITTEN PERMISSION OF BL COMPANIES.

10/20/2020, KKUGLISS, G:\JOBS13\13C\13C4718\DWG\DN13C471801.DWG DN-2 24X36 ARTS.

Architecture
Engineering
Environmental
Land Surveying
BL Companies
100 Constitution Plaza, 10th Floor
Hartford, CT 06103
(860) 249-2200
(860) 249-2400 Fax

STATE OF CONNECTICUT MICHELLE M. CARLSON No.20951 LICENSED PROFESSIONAL ENGINEER

PROPOSED DEVELOPMENT
EVERGREEN WALK - UNIT 12
151 BUCKLAND ROAD
SOUTH WINDSOR, CONNECTICUT

REVISIONS

No.	Date	Desc.
1	01/06/2020	DRAINAGE MODIFICATION
2	09/04/2020	PLANNING AND ZONING SUBMISSION
3	10/20/2020	RESPONSE TO COMMENTS

Designed	J.A.B.
Drawn	S.E.L.
Reviewed	
Scale	N.T.S.
Project No.	13C4718
Date	09/18/2019

CAD File: DN13C471801

Title
SITE DETAILS

Sheet No.
DN-2

Xref (s): - BD13C471801

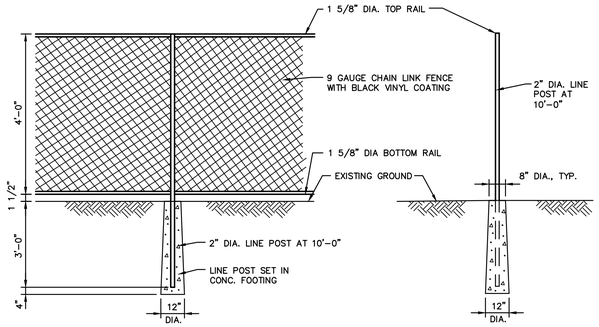

FRONT VIEW

SIDE VIEW

CHAIN LINK FENCE DETAIL

SCALE: NTS

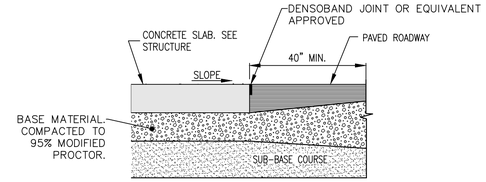

CONCRETE SLAB MATCH AT ASPHALT PAVEMENT

SCALE: NTS C266

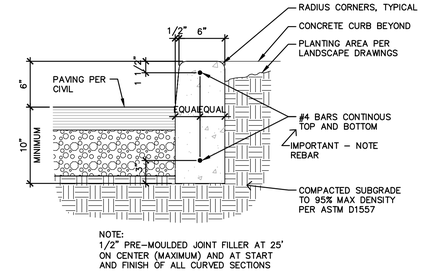

NOTE:
1/2" PRE-MOULDED JOINT FILLER AT 25' ON CENTER (MAXIMUM) AND AT START AND FINISH OF ALL CURVED SECTIONS

CAST-IN-PLACE CONCRETE CURB

SCALE: NTS 0906

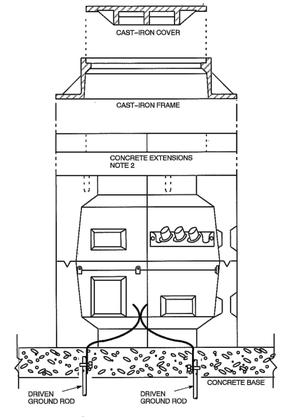

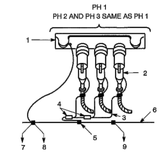

1. JUNCTION CONNECTOR
2. ELBOW CONNECTOR
3. CONCENTRIC NEUTRAL
4. COMPRESSION CONNECTOR
5. BOLTED CONNECTOR
6. TO JCT CONN GRND LUG
7. TO TELEPHONE CO
8. TO GROUND RODS – NOTE 5
9. TO GROUNDING BAR

GROUNDING DIAGRAM

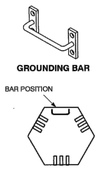

Notes

1. Use concrete extension segments, 2–inch **SC 0174902** or 4–inch **SC 0174903** (each segment is a quarter circle), if required to adjust frame to road grade.
2. For roadway installations, install a concrete base to support hexagonal handhole. Concrete to be 8–inch minimum depth with strength of 3500 psi.
3. In order to gain increased flexibility of jacketed concentric neutral cable to allow easier operation of elbows: Strip the cable jacket back to the duct entrance, seal the jacket in accordance with **DTR 33.411**, and then re–wrap the concentric neutral wires back to within 1 foot of the elbow connector.
4. Install a grounding bar **SC 0177525** on clear surface adjacent to junction connectors. Ground the bar by connecting it to the concentric neutrals with a #2 AWG solid copper grounding wire.
5. Drive two galvanized steel ground rods in trench near handhole and connect as shown in grounding diagram. Minimum separation of ground rods is 8 feet. See **DTR 56.221**.

ORIGINAL 11/15/96	15 OR 23 KV MULTIGROUNDED – 3 PH – CONVENTIONAL UG SYSTEM		
APPROVED 8/1/05	HEXAGONAL HANDHOLE WITH LOADBREAK JUNCTION CONNECTORS		
	NORTHEAST UTILITIES	CONSTRUCTION STANDARD	DTR 76.623 | 3

CONCRETE HEXAGONAL HANDHOLE

SCALE: NTS 0906

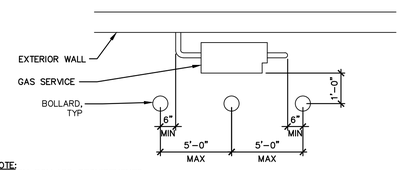

NOTE:
CONFIRM BOLLARD REQUIREMENTS WITH UTILITY COMPANY.

BOLLARD AT GAS SERVICE

SCALE: NTS 0709

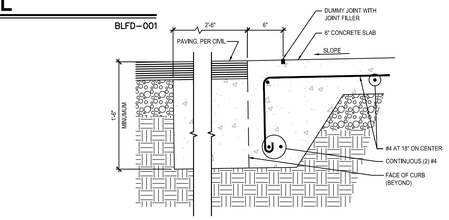

FLUSH CURB AT PAVEMENT

SCALE: NTS 0903

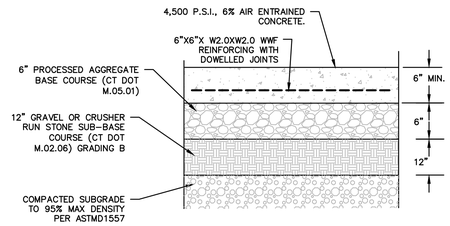

STANDARD/FUEL CENTER CONCRETE PAVEMENT

N.T.S

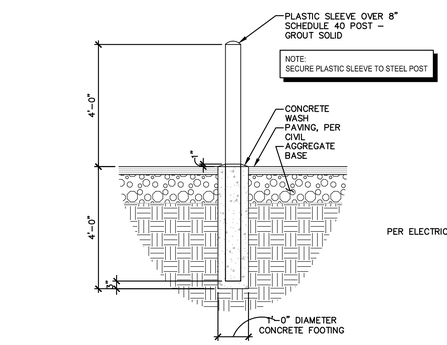

TYPICAL EXTERIOR BOLLARD

SCALE: NTS 0409

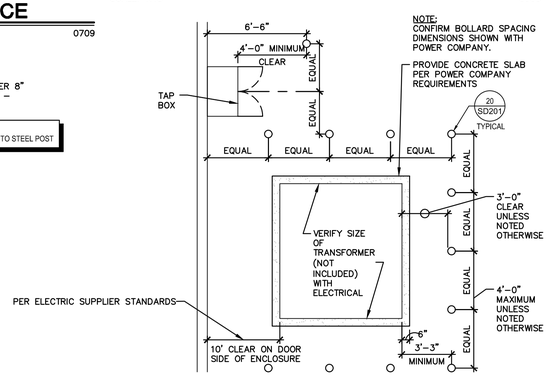

BOLLARDS AT TRANSFORMER

SCALE: NTS 1211

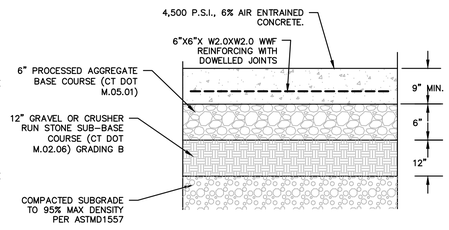

HEAVY DUTY CONCRETE PAVEMENT

N.T.S

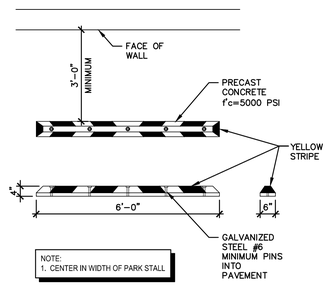

NOTE:
1. CENTER IN WIDTH OF PARK STALL

WHEEL STOP

SCALE: NTS 0710

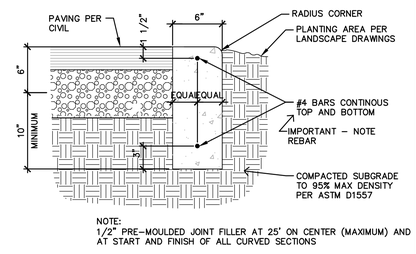

NOTE:
1/2" PRE–MOULDED JOINT FILLER AT 25' ON CENTER (MAXIMUM) AND AT START AND FINISH OF ALL CURVED SECTIONS

DEPRESSESD CONCRETE CURB

SCALE: NTS

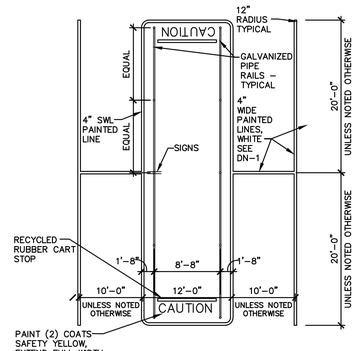

CART CORRAL LAYOUT

SCALE: NTS 0112

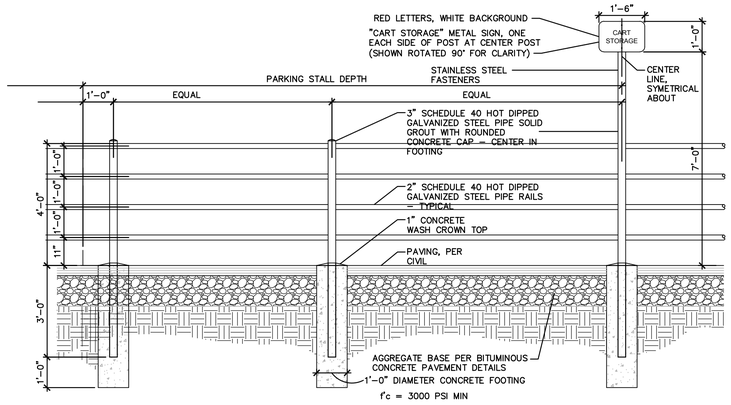

CART STORAGE

SCALE: NTS 0810

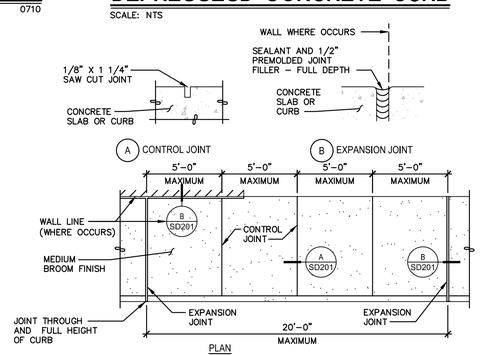

(EXCEPT AT ENTRY CANOPY)

ON-SITE SIDEWALK DETAIL

SCALE: NTS 0710

FOR PERMITTING PURPOSES ONLY
NOT RELEASED FOR CONSTRUCTION

Architecture
Engineering
Environmental
Land Surveying

BL Companies

100 Constitution Plaza, 10th Floor
Hartford, CT 06103
(860) 249-2200
(860) 249-2400 Fax

STATE OF CONNECTICUT MICHELLE M. CARSON No.20951 LICENSED PROFESSIONAL ENGINEER

PROPOSED DEVELOPMENT

EVERGREEN WALK - UNIT 12
151 BUCKLAND ROAD
SOUTH WINDSOR, CONNECTICUT

Desc: DRAINAGE MODIFICATION
DRAINAGE MODIFICATION SUBMISSION
RESPONSE TO COMMENTS

REVISIONS

No.	Date
1	01/06/2020
2	08/14/2020
3	10/20/2020

Designed	J.A.B.
Drawn	S.E.L.
Reviewed	
Scale	N.T.S.
Project No.	13C4718
Date	09/18/2019
CAD File: DN13C471801	

Title

SITE DETAILS

Sheet No.

DN-3

Xref (s): - BD13C471801

10/20/2020, KKIGUSS, G:\JOBS\13\13C\13C4718\DWGS\DN13C471801.DWG, DN-3 24X36 HTS.

© 2020 BL COMPANIES, INC. THESE DRAWINGS SHALL NOT BE UTILIZED BY ANY PERSON, FIRM OR CORPORATION WITHOUT THE SPECIFIC WRITTEN PERMISSION OF BL COMPANIES.

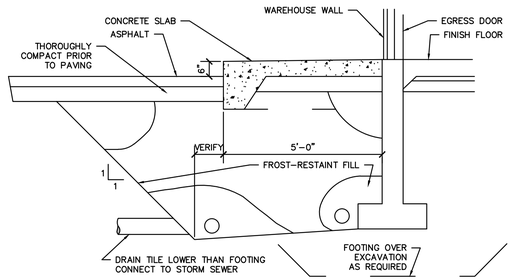

COLD CLIMATE DETAIL AT EGRESS DOOR/SIDEWALK CURB

N.T.S. DETAIL 2

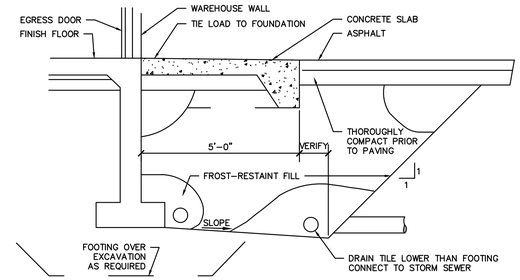

COLD CLIMATE DETAIL AT EGRESS DOOR WITH STOOP

N.T.S. DETAIL 1

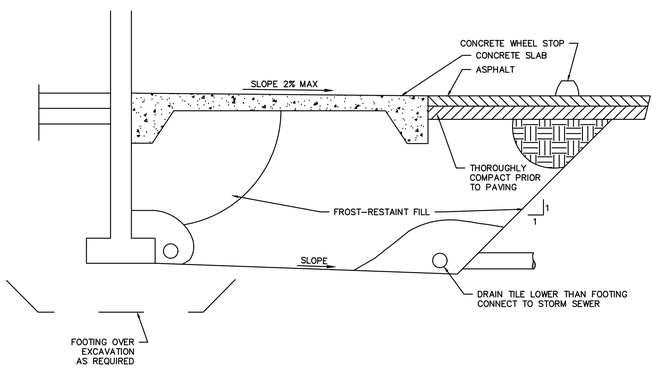

COLD CLIMATE DETAIL ALONG WALK AT PARKING

N.T.S. DETAIL 5

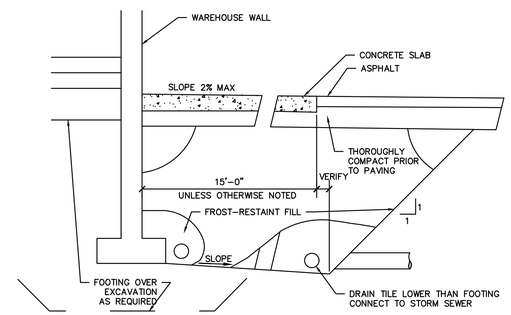

COLD CLIMATE DETAIL AT TRASH COMPACTOR

N.T.S. DETAIL 3

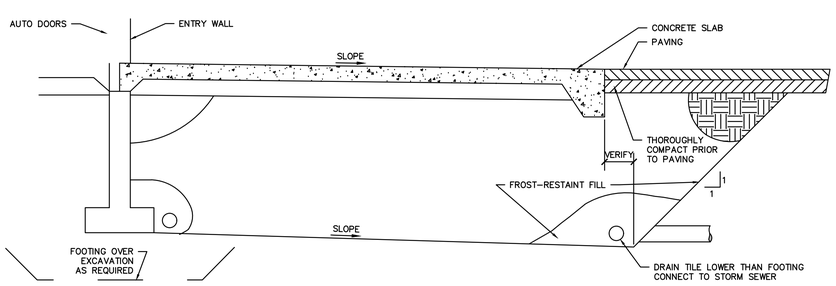

COLD CLIMATE DETAIL AT AUTO-DOORS AT ENCLOSED CANOPY

N.T.S. DETAIL 4

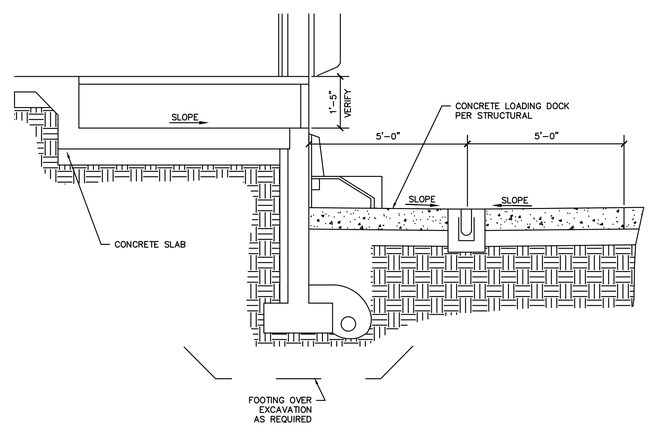

COLD CLIMATE DETAIL AT LOADING DOCK

N.T.S. DETAIL 7

FOR PERMITTING PURPOSES ONLY
NOT RELEASED FOR CONSTRUCTION

© 2020 BL COMPANIES, INC. THESE DRAWINGS SHALL NOT BE UTILIZED BY ANY PERSON, FIRM OR CORPORATION WITHOUT THE SPECIFIC WRITTEN PERMISSION OF BL COMPANIES.

10/20/2020, KKLUGAS, G:\JOBS13\13C\13C4718\DWG\DN13C471801.DWG,DN-4,24X36,1:1

Architecture
Engineering
Environmental
Land Surveying

BL Companies

100 Constitution Plaza, 10th Floor
Hartford, CT 06103
(860) 249-2200
(860) 249-2400 Fax

STATE OF CONNECTICUT
MICHELLE M. CARLSON
No.20951
LICENSED
PROFESSIONAL ENGINEER

PROPOSED DEVELOPMENT
EVERGREEN WALK - UNIT 12
151 BUCKLAND ROAD
SOUTH WINDSOR, CONNECTICUT

REVISIONS

No.	Date	Desc.
1	01/06/2020	DRAINAGE MODIFICATION
2	09/14/2020	PLANNING & ZONING SUBMISSION
3	10/20/2020	RESPONSE TO COMMENTS

Designed	J.A.B.
Drawn	S.E.L.
Reviewed	
Scale	N.T.S.
Project No.	13C4718
Date	09/18/2019

CAD File: DN13C471801

Title
SITE DETAILS

Sheet No.
DN-4

Xref (s): - BD13C471801

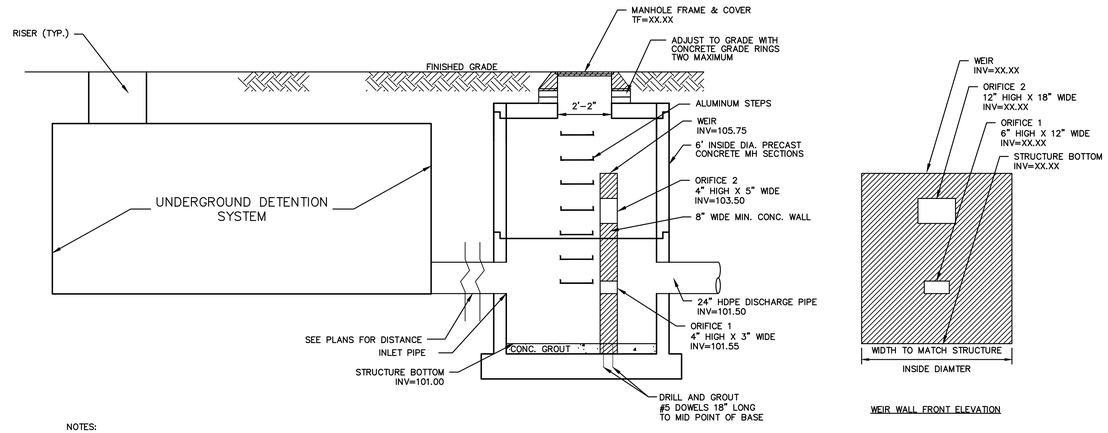

NOTES:

1. SEE PLANS FOR UNDERGROUND DETENTION SYSTEM DETAILS. ALL UNITS TO BE INSTALLED TO THE MANUFACTURERS SPECIFICATIONS.
2. UNDERGROUND DETENTION SYSTEM, MANHOLE FRAMES AND COVERS TO BE HS20 QUALIFIED.

UNDERGROUND DETENTION OUTLET CONTROL STRUCTURE 1 (OCS-216)

N.T.S

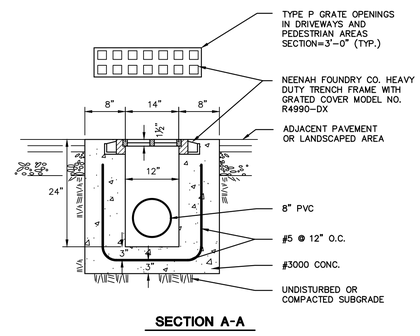

SECTION A-A

TRENCH DRAIN

N.T.S. BLDD-007

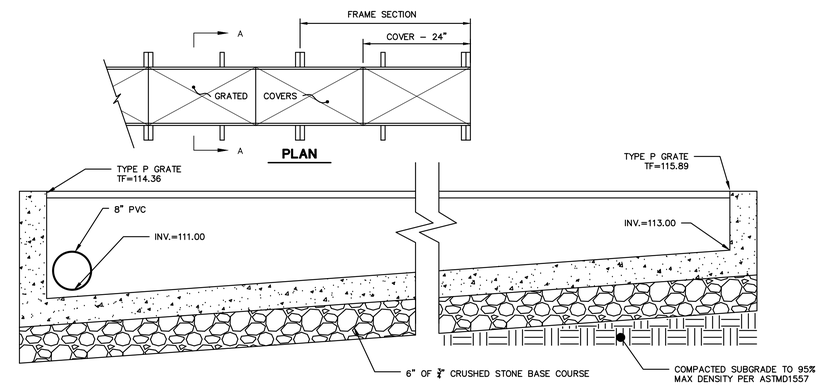

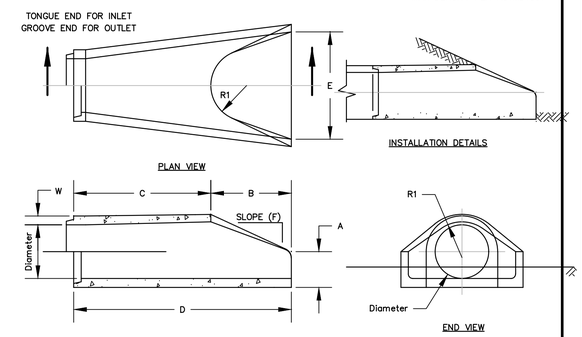

	Dimensions								
Diameter	A	B	C	D	E	F	R1	W
12"ø	4"	2'-0"	4'-0 7/8"	6'-0 7/8"	2'-0"	3 : 1	9"	2 9/16"
15"ø	6"	2'-3"	3'-10"	6'-1"	2'-6"	3 : 1	11"	2 11/16"
18"ø	9"	2'-3"	3'-10"	6'-1"	3'-0"	3 : 1	12"	2 13/16"
24"ø	10"	3'-8"	2'-6"	6'-2"	4'-0"	3 : 1	14"	5 21/32"
30"ø	12"	4'-6"	1'-8"	6'-2"	5'-0"	3 : 1	15"	4 17/32"
36"ø	15"	5'-3"	2'-11"	8'-2"	6'-0"	3 : 1	20"	4 17/32"
42"ø	21"	5'-3"	2'-11"	8'-2"	6'-6"	3 : 1	22"	4 13/32"

NOTES:

1. Produced to ASTM Specifications.
2. This drawing is not intended to show reinforcement design. Either as to placement or steel area. Actual project specifications or current ASTM will govern.

FLARED END SECTION DETAILS

N.T.S. ZDD-062

FOR PERMITTING PURPOSES ONLY
NOT RELEASED FOR CONSTRUCTION

Architecture
Engineering
Environmental
Land Surveying

BL Companies

100 Constitution Plaza, 10th Floor
Hartford, CT 06103
(860) 249-2200
(860) 249-2400 Fax

STATE OF CONNECTICUT
MICHELLE M. CARLSON
No.20951
LICENSED
PROFESSIONAL ENGINEER

PROPOSED DEVELOPMENT
EVERGREEN WALK - UNIT 12
151 BUCKLAND ROAD
SOUTH WINDSOR, CONNECTICUT

REVISIONS

No.	Date	Desc.
1	01/06/2020	DRAINAGE MODIFICATION
2	09/14/2020	PLANNING AND ZONING SUBMISSION
3	10/20/2020	RESPONSE TO COMMENTS

Designed	J.A.B.
Drawn	S.E.L.
Reviewed	
Scale	N.T.S.
Project No.	13C4718
Date	09/18/2019
CAD File: DN13C471801	

Title

SITE DETAILS

Sheet No.

DN-5

10/20/2020, KKIGUISS, G:\JOBS13\13C\13C4718\DWG\DN\13C471801.DWG DN-5 24X36 HTS.

Xref (s): BD13C471801

© 2020 BL COMPANIES, INC. THESE DRAWINGS SHALL NOT BE UTILIZED BY ANY PERSON, FIRM OR CORPORATION WITHOUT THE SPECIFIC WRITTEN PERMISSION OF BL COMPANIES.

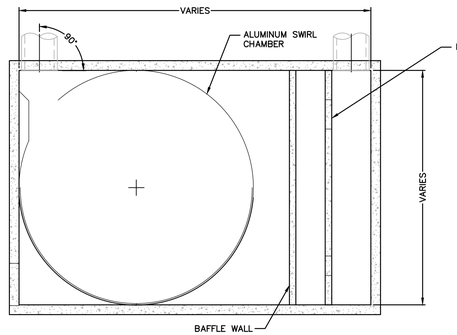

GENERAL NOTES
1. CONTRACTOR TO PROVIDE ALL MATERIALS UNLESS NOTED OTHERWISE.
2. VORTECHS WATER QUALITY STRUCTURE SHALL BE IN ACCORDANCE WITH ALL DESIGN DATA AND INFORMATION CONTAINED IN THIS DRAWING.
3. STRUCTURE SHALL MEET AASHTO HS20 AND CASTINGS SHALL MEET AASHTO M306 LOAD RATING, ASSUMING GROUNDWATER ELEVATION AT, OR BELOW, THE OUTLET PIPE INVERT ELEVATION.
4. INLET PIPE(S) MUST BE PERPENDICULAR TO THE VAULT AND AT THE CORNER TO INTRODUCE THE FLOW TANGENTIALLY TO THE SWIRL CHAMBER. DUAL INLETS NOT TO HAVE OPPOSING TANGENTIAL FLOW DIRECTIONS.
5. OUTLET PIPE(S) MUST BE DOWN STREAM OF THE FLOW CONTROL BAFFLE AND MAY BE LOCATED ON THE SIDE OR END OF THE VAULT. THE FLOW CONTROL WALL MAY BE TURNED TO ACCOMODATE OUTLET PIPE KNOCKOUTS ON THE SIDE OF THE VAULT.

INSTALLATION NOTES
1. CONTRACTOR TO PROVIDE EQUIPMENT WITH SUFFICIENT LIFTING AND REACH CAPACITY TO LIFT AND SET THE MANHOLE STRUCTURE (LIFTING CLUTCHES PROVIDED).
2. CONTRACTOR TO INSTALL JOINT SEALANT BETWEEN ALL STRUCTURE SECTIONS AND ASSEMBLE STRUCTURE.
3. CONTRACTOR TO PROVIDE, INSTALL, AND GROUT PIPES. MATCH PIPE INVERTS WITH ELEVATIONS SHOWN.
4. CONTRACTOR TO TAKE APPROPRIATE MEASURES TO ASSURE UNIT IS WATER TIGHT, HOLDING WATER TO FLOWLINE INVERT MINIMUM. ALL JOINTS BELOW PIPE INVERTS ARE TO BE GROUTED.

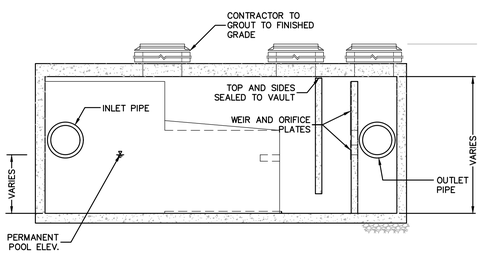

HYDRODYNAMIC SEPARATOR	WQF (CFS)	HYDRODYNAMIC UNIT
HDS-204	2.4	VORTECHS 3000
HDS-211	4.0	VORTECHS 4000
HDS-319	2.1	VORTECHS 2000

VORTECHS HYDRODYNAMIC SEPARATOR

SCALE: NTS

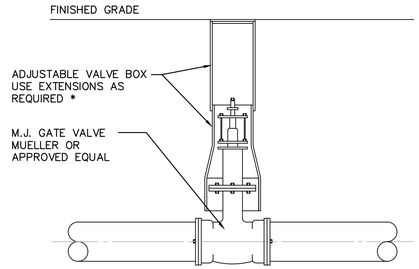

* NOTE: IF EXTENSIONS ARE NECESSARY CONTRACTOR SHALL SET "PLUMB" AND ALIGN PROPERLY FOR ACCESS TO OPERATING NUT.

GATE VALVE AND VALVE BOX DETAIL FOR OIL/WATER SEPARATOR

SCALE: NTS

R-3563-HB
Gutter Inlet Frames, Grate

Heavy Duty

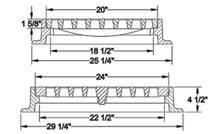

CATALOG NUMBER	GRATE TYPE	SQ. FT. OPEN	WEIR PERIMETER LINEAL FEET
R-3563-HB	K	1.3	7.3

* NOTE: CONTRACTOR TO VERIFY GRATE HAS A MAXIMUM OF 1" OPENING

NEENAH R-3563-HB

SCALE: NTS

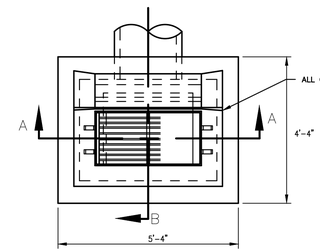

NOTE:
1. DRAINAGE OPENINGS IN 4 WALLS AT OR IMMEDIATELY ABOVE THE BOTTOM OF THE PERVIOUS BACKFILL.
2. INSTALL 6" THICK BEDDING LAYER OF 3/4" CRUSHED STONE AT EACH CATCH BASIN LOCATION.

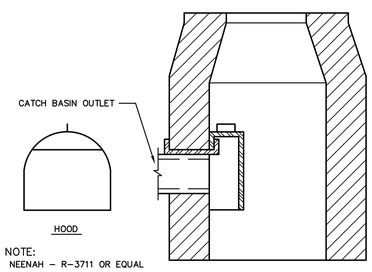

NOTE:
NEENAH - R-3711 OR EQUAL

HOODED OUTLET

N.T.S.

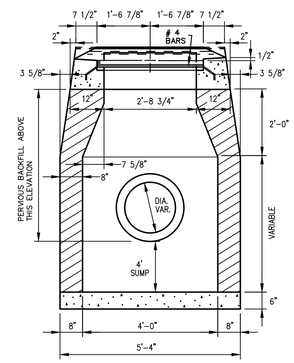

SECTION A-A

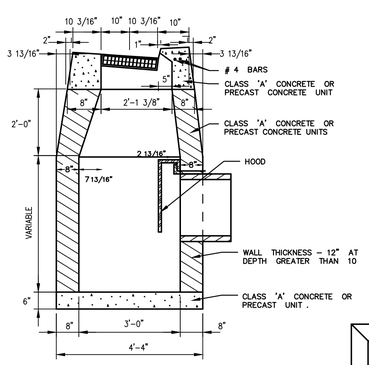

SECTION B-B

TYPE "C" CATCH BASIN WITH HOOD

N.T.S.

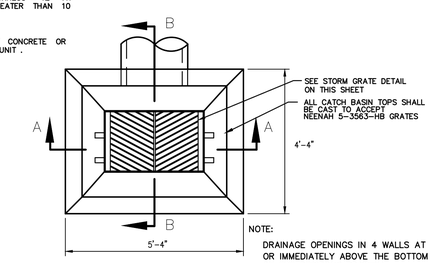

NOTE:
DRAINAGE OPENINGS IN 4 WALLS AT OR IMMEDIATELY ABOVE THE BOTTOM OF THE PERVIOUS BACKFILL.

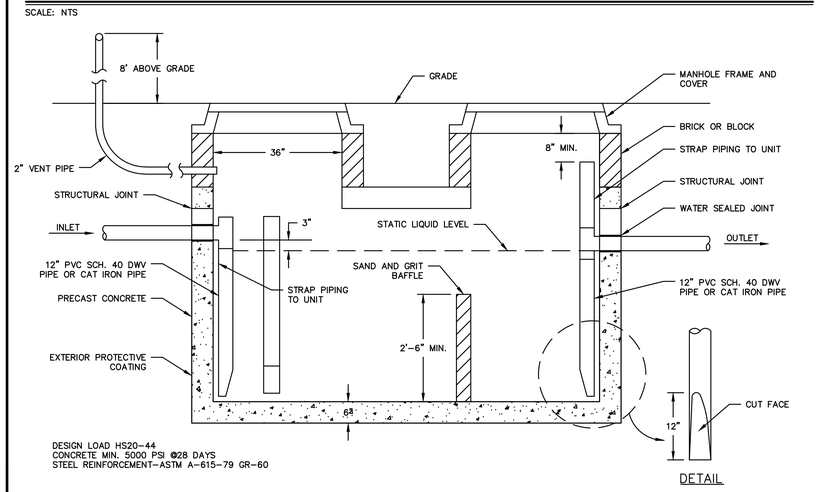

DESIGN LOAD HS20-44
CONCRETE MIN. 5000 PSI Ø28 DAYS
STEEL REINFORCEMENT-ASTM A-615-79 GR-60

NOTES:
1. TANK SHALL HAVE A MINIMUM CAPACITY OF 1500 GALLONS. TANK SHALL BE CONSTRUCTED OF PRECAST CONCRETE.
2. INTERIOR OF THE TANK AND EXTENSION TO GRADE MANHOLES SHALL BE COATED WITH AN EPOXY PETROLEUM RESISTANT SEALANT. EXTERIOR OF THE TANK AND EXTENSION GRADE MANHOLES SHALL BE COATED WITH A WATERPROOF FOUNDATION SEALANT. THIS INCLUDES THE TANK EXTERIORS TOP AND BOTTOM.
3. STRUCTURAL SEAM OF THE TANK SHALL BE FILLED IN WITH NON-SHRINKING CEMENT OR WATER PLUG AND COATED WITH WATERPROOF SEALANT.
4. VOIDS BETWEEN INLET AND OUTLET PIPING OF THE TANK SHALL BE GROUTED WITH NON-SHRINKING CEMENT AND COATED WITH A WATERPROOF SEALANT.
5. THE TANK SHALL HAVE EXTENSIONS TO GRADE ABOVE THE INLET AND OUTLET PIPING. THE EXTENSION SHALL HAVE FRAMES AND MANHOLE COVERS. THE MANHOLES, EXTENSIONS AND ACCESSES TO THE TANK SHALL BE AT LEAST 24 INCHES IN DIAMETER.
6. THE OUTLET PIPING SHALL UTILIZE A TEE-PIPE ON THE INTERIOR OF THE TANK. THE TEE-PIPE SHALL BE EQUIPPED WITH A STRAND PIPE RISER EXTENDING UP THE EXTENSION TO GRADE BUT NO CLOSER THAN EIGHT (8) INCHES FROM THE MANHOLE COVER. THE TEE-PIPE SHALL EXTEND SIX (6) TO TWELVE (12) INCHES FROM THE BOTTOM OF THE TANK.
7. THE INLET EXTENSION TO GRAD SHALL BE PROVIDED WITH A VENT LINE WHICH EXTENDS EIGHT (8) FEET ABOVE FINISHED GRADE AND PROPERLY SECURED TO THE BUILDING. THE SIZE OF THE VENT SHALL BE HALF THE SIZE OF THE OUTLET DISCHARGE LINE.
8. THE HORIZONTAL STRUCTURAL SEAM OF THE TANK SHALL BE LOCATED ABOVE THE STATIC LIQUID LEVEL OF THE TANK.
9. THE INCOMING PIPE SHALL NOT INCLUDE ANY SOURCES OF DOMESTIC WASTEWATER.
10. THE OUTLET PIPE SHALL BE CONNECTED TO THE STORM SEWER.
11. THE OUTLET PIPE SHALL BE AT LEAST THE SIZE OF THE INLET PIPE OR GREATER AND AT A MINIMUM SHOULD BE 4.0 INCHES IN DIAMETER.
12. IF HEAVY PIPING, SUCH AS CAST IRON IS USED, ALL PIPING MUST BE STRUCTURALLY SECURED.
13. THE CONCRETE COVERS PROVIDED BY THE OIL SEPARATOR MANUFACTURERS MUST BE REMOVED AND DISCARDED.

OIL/WATER SEPARATOR

SCALE: NTS

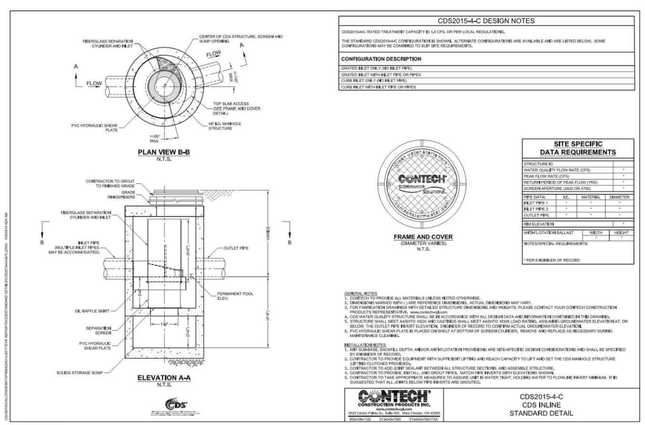

CDS HYDRODYNAMIC SEPARATOR HDS-100

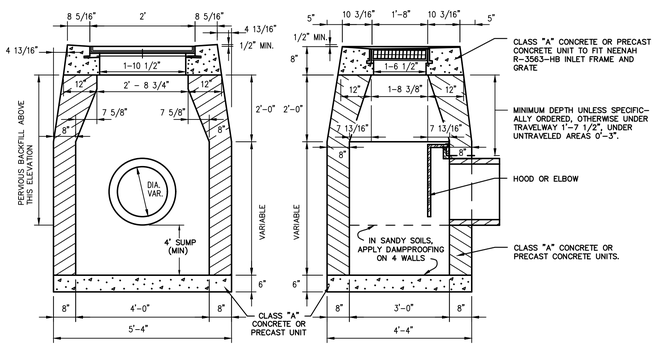

SECTION A-A

SECTION B-B

TYPE "C-L" CATCH BASIN WITH HOOD

SCALE: NTS

CTDD-002

FOR PERMITTING PURPOSES ONLY
NOT RELEASED FOR CONSTRUCTION

© 2020 BL COMPANIES, INC. THESE DRAWINGS SHALL NOT BE UTILIZED BY ANY PERSON, FIRM OR CORPORATION WITHOUT THE SPECIFIC WRITTEN PERMISSION OF BL COMPANIES.

Architecture
Engineering
Environmental
Land Surveying
BL Companies
100 Constitution Plaza, 10th Floor
Hartford, CT 06103
(860) 249-2200
(860) 249-2400 Fax

STATE OF CONNECTICUT
CHELLE M. CARLSON
No.20951
LICENSED PROFESSIONAL ENGINEER

PROPOSED DEVELOPMENT
EVERGREEN WALK - UNIT 12
151 BUCKLAND ROAD
SOUTH WINDSOR, CONNECTICUT

REVISIONS

No.	Date	Desc.
1	01/06/2020	DRAINAGE MODIFICATION
2	01/14/2020	PLANNING & ZONING SUBMISSION
3	10/20/2020	RESPONSE TO COMMENTS

Designed	J.A.B.
Drawn	S.E.L.
Reviewed	
Scale	N.T.S.
Project No.	13C4718
Date	09/18/2019

CAD File: DN13C471801

Title
SITE DETAILS

Sheet No.
DN-6

Xref (s): - 13C3-C471801

10/20/2020, KRAUSS, G:\JOBS\13\13C\13C471801\DWG\DN13C471801.DWG,DN-6 24X36 NTS,

NOTES:
1. MINIMUM 4' DIAMETER MANHOLE. SEE MANHOLE FOR REMAINDER MH DETAILS.
2. DOGHOUSE OPENING MAY ONLY BE USED WHEN PLACING A NEW MANHOLE OVER AN EXISTING LINE; OTHERWISE, THE OPENING MUST BE CAST.
3. OPENINGS IN PRECAST UNITS ARE TO BE 4" MINIMUM TO 8" MAXIMUM LARGER THAN THE OUTSIDE DIAMETER OF THE EXISTING PIPE.
4. TOP HALF OF EXISTING PIPE TO BE REMOVED FOR FULL LENGTH EXPOSED INSIDE MANHOLE. EXISTING MAIN TO BE NEATLY CUT ALONG THE SPRING LINE OF THE PIPE.

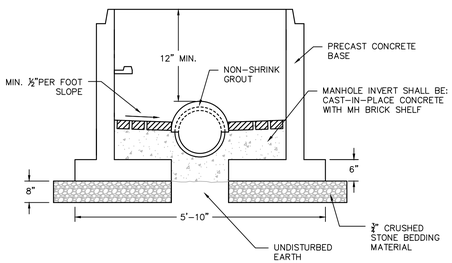

DOGHOUSE MANHOLE BASE

N.T.S.

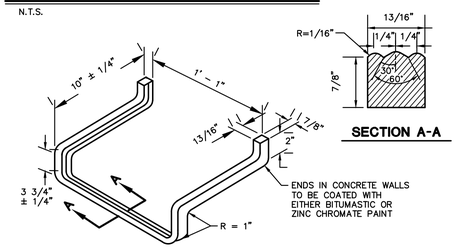

NOTE : STEPS TO BE FORGED ALUMINUM

STANDARD MANHOLE STEP

N.T.S. BLSS-005

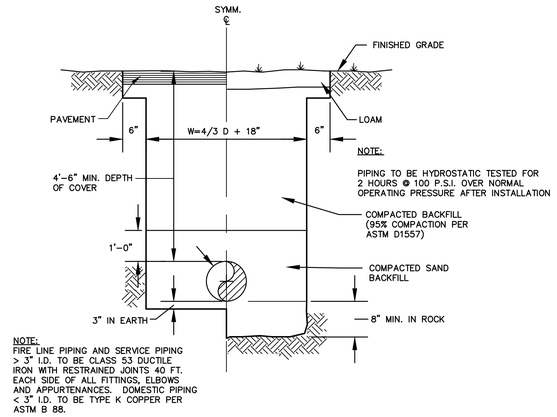

NOTE:
PIPING TO BE HYDROSTATIC TESTED FOR 2 HOURS @ 100 P.S.I. OVER NORMAL OPERATING PRESSURE AFTER INSTALLATION

NOTE:
FIRE LINE PIPING AND SERVICE PIPING > 3" I.D. TO BE CLASS 53 DUCTILE IRON WITH RESTRAINED JOINTS 40 FT. EACH SIDE OF ALL FITTINGS, ELBOWS AND APPURTENANCES. DOMESTIC PIPING < 3" I.D. TO BE TYPE K COPPER PER ASTM B 88.

TYPICAL WATER MAIN AND SERVICE TRENCH DETAIL

N.T.S. BLWD-005

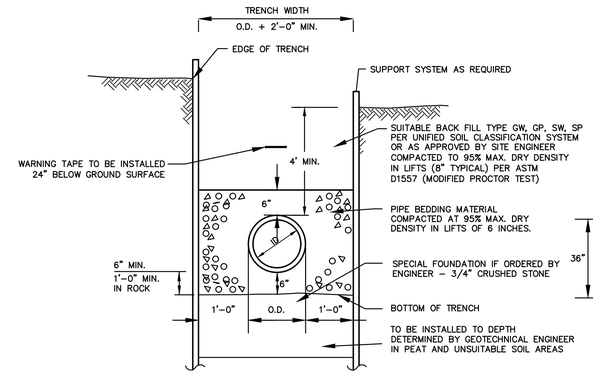

TYPICAL SANITARY SEWER TRENCH SECTION

N.T.S BLSS-010

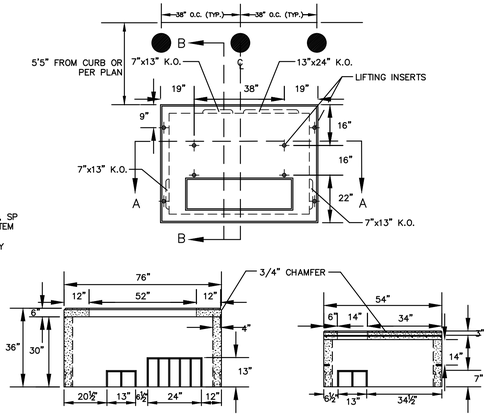

NOTES:
1. CONCRETE COMPRESSIVE STRENGTH SHALL BE 4000 PSI AT 28 DAYS
2. SHALL MEET ALL PROVISIONS OF ELECTRIC CO.
3. SHALL BE INSTALLED 2' OFF CURB AND PROTECTED BY BOLLARDS.
4. SEE DETAIL FOR STEEL BOLLARD INSTALLATION
5. CONTRACTOR SHALL CONFIRM PAD SIZE AND BOLLARD LOCATION WITH ELECTRIC COMPANY PRIOR TO CONSTRUCTION

TRANSFORMER PAD

SCALE: NTS

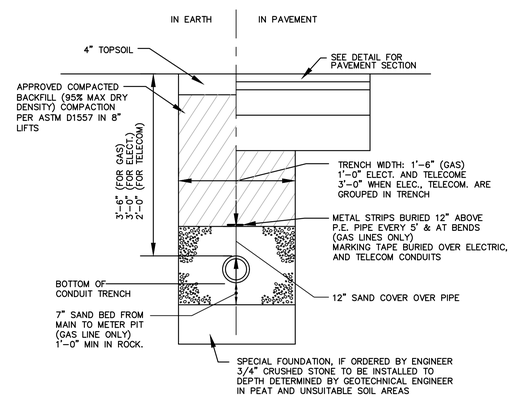

ELECTRICAL, TELECOM AND GAS TRENCH DETAIL

SCALE: NTS

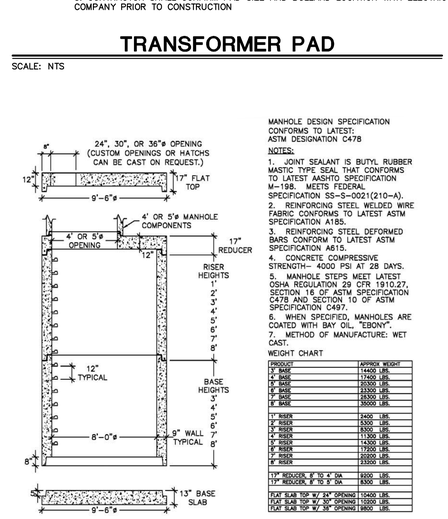

MANHOLE DESIGN SPECIFICATION CONFORMS TO LATEST: ASTM DESIGNATION C478

NOTES:
1. JOINT SEALANT IS BUTYL RUBBER MASTIC TYPE SEAL THAT CONFORMS TO LATEST AASHTO SPECIFICATION M-198. MEETS FEDERAL SPECIFICATION SS-S-0021(210-A).
2. REINFORCING STEEL WELDED WIRE FABRIC CONFORMS TO LATEST ASTM SPECIFICATION A185.
3. REINFORCING STEEL DEFORMED BARS CONFORM TO LATEST ASTM SPECIFICATION A615.
4. CONCRETE COMPRESSIVE STRENGTH– 4000 PSI AT 28 DAYS.
5. MANHOLE STEPS MEET LATEST OSHA REGULATION 29 CFR 1910.27, SECTION 16 OF ASTM SPECIFICATION C478 AND SECTION 10 OF ASTM SPECIFICATION C497.
6. WHEN SPECIFIED, MANHOLES ARE COATED WITH BAY OIL, "EBONY".
7. METHOD OF MANUFACTURE: WET CAST.

WEIGHT CHART

PRODUCT	APPROX WEIGHT
3' BASE	14400 LBS.
4' BASE	17400 LBS.
5' BASE	20300 LBS.
6' BASE	23300 LBS.
7' BASE	26300 LBS.
8' BASE	30000 LBS.
1' RISER	2400 LBS.
2' RISER	5300 LBS.
3' RISER	8300 LBS.
4' RISER	11300 LBS.
5' RISER	14300 LBS.
6' RISER	17300 LBS.
7' RISER	20300 LBS.
8' RISER	23300 LBS.
13" REDUCER, 8' TO 4' DIA	6000 LBS.
17" REDUCER, 8' TO 5' DIA	8300 LBS.
FLAT SLAB TOP W/ 24" OPENING	10400 LBS.
FLAT SLAB TOP W/ 30" OPENING	12800 LBS.
FLAT SLAB TOP W/ 36" OPENING	9800 LBS.

8' DIA. MANHOLE STRUCTURE

SCALE: NTS

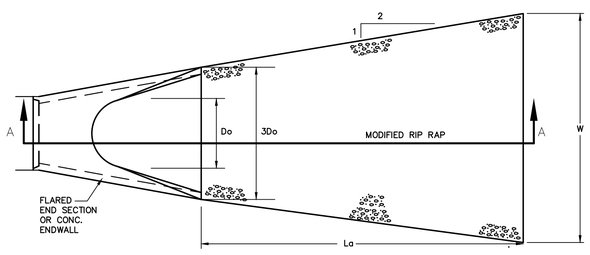

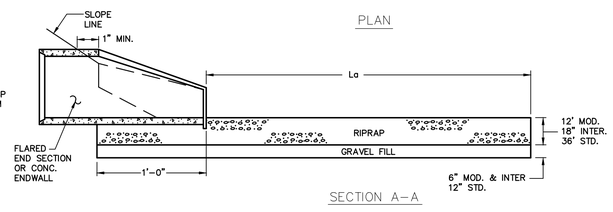

$$L_a = \frac{1.7Q}{D_o^{3/2}} + 8Do$$

$$W = 3Do + La$$

$$d_{50} = \frac{0.02}{TW}\left(\frac{Q}{Do}\right)^{4/3}$$

NOTE: CALCULATION PER THE 2002 CONNECTICUT GUIDELINE FOR SOIL EROSION AND SEDIMENT CONTROL MANUAL SECTION 5-10

RIP RAP OUTLET PROTECTION

SCALE: NTS

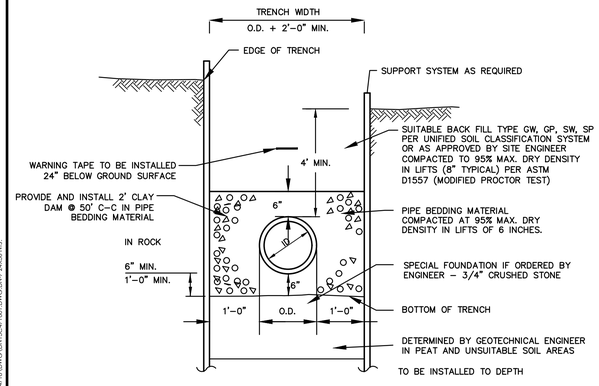

TYPICAL SANITARY FORCE MAIN TRENCH SECTION

N.T.S BLSS-010

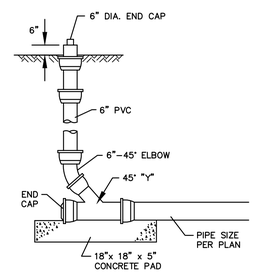

CLEANOUT DETAIL IN LANDSCAPED AREA

N.T.S BLSS-007

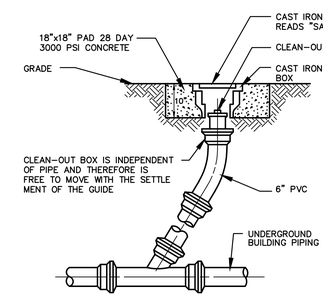

CLEANOUT DETAIL IN PAVED AREAS

N.T.S BLSS-008

FOR PERMITTING PURPOSES ONLY
NOT RELEASED FOR CONSTRUCTION

Architecture
Engineering
Environmental
Land Surveying

BL Companies

100 Constitution Plaza, 10th Floor
Hartford, CT 06103
(860) 249-2200
(860) 249-2400 Fax

STATE OF CONNECTICUT MICHELLE M. CARLSON No.20951 LICENSED PROFESSIONAL ENGINEER

PROPOSED DEVELOPMENT
EVERGREEN WALK - UNIT 12
151 BUCKLAND ROAD
SOUTH WINDSOR, CONNECTICUT

REVISIONS

No.	Date	Description
1	01/06/2020	DRAINAGE MODIFICATION
2	09/04/2020	PLANNING & ZONING SUBMISSION
3	10/20/2020	RESPONSE TO COMMENTS

Disc:

Designed	J.A.B.
Drawn	S.E.L.
Reviewed	
Scale	N.T.S.
Project No.	13C4718
Date	09/18/2019
CAD File: DN13C471801	

Title
SITE DETAILS

Sheet No.
DN-7

Xref (s): : BD13C471801

© 2020 BL COMPANIES, INC. THESE DRAWINGS SHALL NOT BE UTILIZED BY ANY PERSON, FIRM OR CORPORATION WITHOUT THE SPECIFIC WRITTEN PERMISSION OF BL COMPANIES.

10/20/2020, KKLEGIS, C:\J-DRIVE\J\13\13C4718\DWG\DN13C471801.DWG,DN13-7-24X36.NTS,

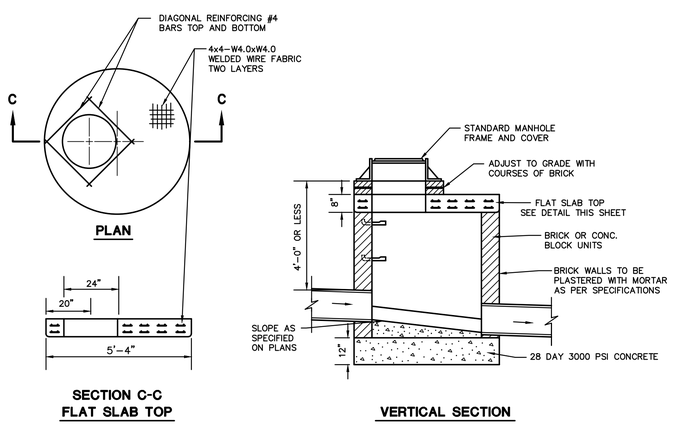

STANDARD SHALLOW STORM MANHOLE

N.T.S BLSS–004

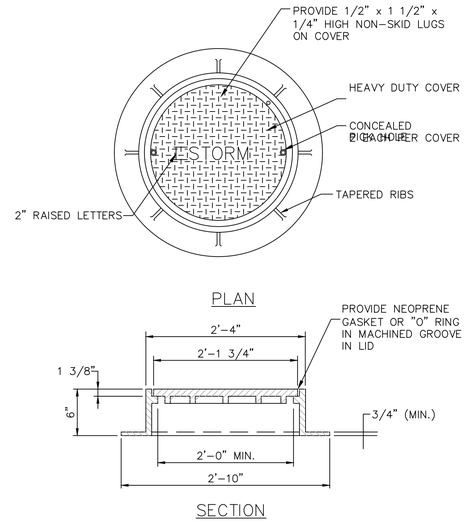

STORM MANHOLE FRAME AND COVER

N.T.S. RA_C202_J6

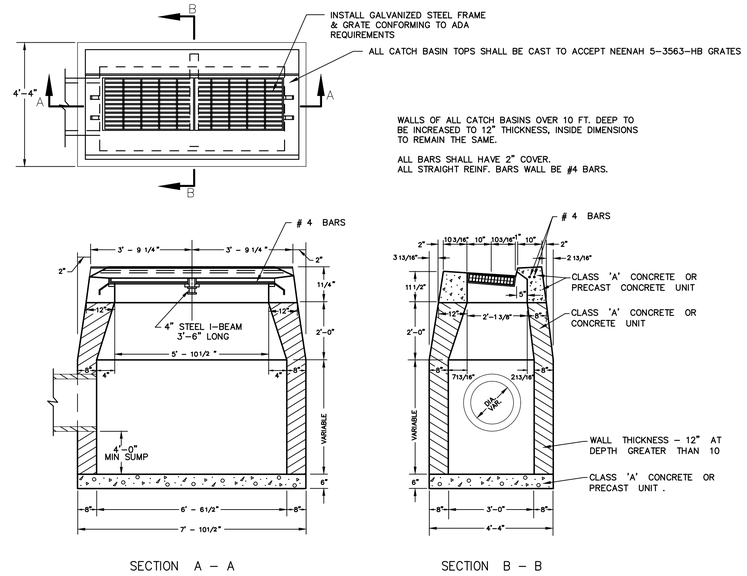

TYPE "C" DOUBLE CATCH BASIN (DOUBLE GRATE TYPE II)

N.T.S.

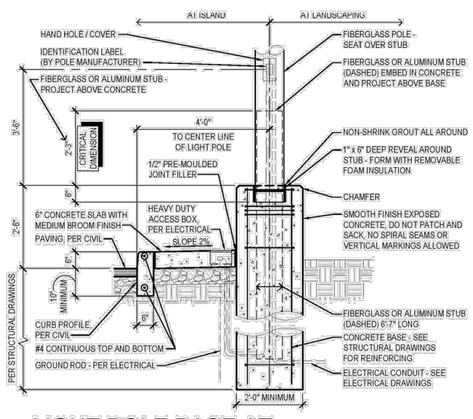

LIGHT POLE BASE AT CONCRETE ISLAND / LANDSCAPING

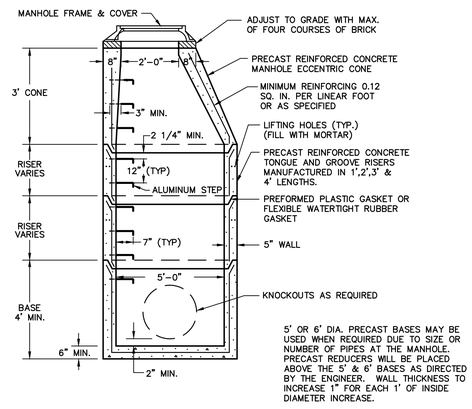

PRECAST STORM MANHOLE DETAIL

N.T.S. ZDD–049

ACCEPTABLE FILL MATERIALS: STORMTECH MC-4500 CHAMBER SYSTEMS

	MATERIAL LOCATION	DESCRIPTION	AASHTO MATERIAL CLASSIFICATIONS	COMPACTION / DENSITY REQUIREMENT
D	**FINAL FILL:** FILL MATERIAL FOR LAYER 'D' STARTS FROM THE TOP OF THE 'C' LAYER TO THE BOTTOM OF FLEXIBLE PAVEMENT OR UNPAVED FINISHED GRADE ABOVE. NOTE THAT PAVEMENT SUBBASE MAY BE PART OF THE 'D' LAYER	ANY SOIL/ROCK MATERIALS, NATIVE SOILS, OR PER ENGINEER'S PLANS. CHECK PLANS FOR PAVEMENT SUBGRADE REQUIREMENTS.	N/A	PREPARE PER SITE DESIGN ENGINEER'S PLANS. PAVED INSTALLATIONS MAY HAVE STRINGENT MATERIAL AND PREPARATION REQUIREMENTS.
C	**INITIAL FILL:** FILL MATERIAL FOR LAYER 'C' STARTS FROM THE TOP OF THE EMBEDMENT STONE ('B' LAYER) TO 24" (600 mm) ABOVE THE TOP OF THE CHAMBER. NOTE THAT PAVEMENT SUBBASE MAY BE A PART OF THE 'C' LAYER.	GRANULAR WELL-GRADED SOIL/AGGREGATE MIXTURES, <35% FINES OR PROCESSED AGGREGATE. MOST PAVEMENT SUBBASE MATERIALS CAN BE USED IN LIEU OF THIS LAYER.	AASHTO M145[1] A-1, A-2-4, A-3 OR AASHTO M43[1] 3, 357, 4, 467, 5, 56, 57, 6, 67, 68, 7, 78, 8, 89, 9, 10	BEGIN COMPACTIONS AFTER 24" (600 mm) OF MATERIAL OVER THE CHAMBERS IS REACHED. COMPACT ADDITIONAL LAYERS IN 12" (300 mm) MAX LIFTS TO A MIN. 95% PROCTOR DENSITY FOR WELL GRADED MATERIAL AND 95% RELATIVE DENSITY FOR PROCESSED AGGREGATE MATERIALS.
B	**EMBEDMENT STONE:** FILL SURROUNDING THE CHAMBERS FROM THE FOUNDATION STONE ('A' LAYER) TO THE 'C' LAYER ABOVE.	CLEAN, CRUSHED, ANGULAR STONE	AASHTO M43[1] 3, 4	
A	**FOUNDATION STONE:** FILL BELOW CHAMBERS FROM THE SUBGRADE UP TO THE FOOT (BOTTOM) OF THE CHAMBER.	CLEAN, CRUSHED, ANGULAR STONE	AASHTO M43[1] 3, 4	PLATE COMPACT OR ROLL TO ACHIEVE A FLAT SURFACE. [2,3]

PLEASE NOTE:
1. THE LISTED AASHTO DESIGNATIONS ARE FOR GRADATIONS ONLY. THE STONE MUST ALSO BE CLEAN, CRUSHED, ANGULAR. FOR EXAMPLE, A SPECIFICATION FOR #4 STONE WOULD STATE: "CLEAN, CRUSHED, ANGULAR NO. 4 (AASHTO M43) STONE".
2. STORMTECH COMPACTION REQUIREMENTS ARE MET FOR 'A' LOCATION MATERIALS WHEN PLACED AND COMPACTED IN 9" (230 mm) (MAX) LIFTS USING TWO FULL COVERAGES WITH A VIBRATORY COMPACTOR.
3. WHERE INFILTRATION SURFACES MAY BE COMPROMISED BY COMPACTION, FOR STANDARD DESIGN LOAD CONDITIONS, A FLAT SURFACE MAY BE ACHIEVED BY RAKING OR DRAGGING WITHOUT COMPACTION EQUIPMENT. FOR SPECIAL LOAD DESIGNS, CONTACT STORMTECH FOR COMPACTION REQUIREMENTS.

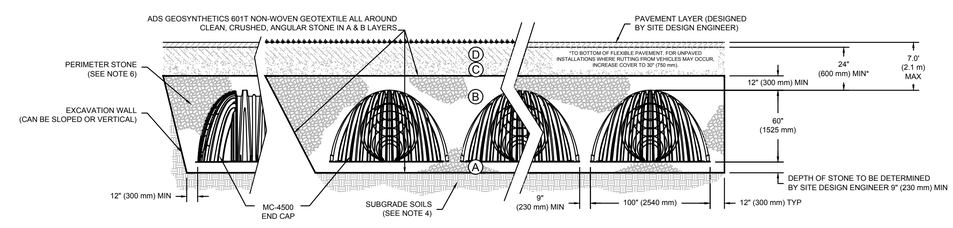

*FOR COVER DEPTHS GREATER THAN 7.0' (2.1 m) PLEASE CONTACT STORMTECH

NOTES:

1. MC-4500 CHAMBERS SHALL CONFORM TO THE REQUIREMENTS OF ASTM F2418 "STANDARD SPECIFICATION FOR POLYPROPYLENE (PP) CORRUGATED WALL STORMWATER COLLECTION CHAMBERS".
2. MC-4500 CHAMBERS SHALL BE DESIGNED IN ACCORDANCE WITH ASTM F2787 "STANDARD PRACTICE FOR STRUCTURAL DESIGN OF THERMOPLASTIC CORRUGATED WALL STORMWATER COLLECTION CHAMBERS".
3. "ACCEPTABLE FILL MATERIALS" TABLE ABOVE PROVIDES MATERIAL LOCATIONS, DESCRIPTIONS, GRADATIONS, AND COMPACTION REQUIREMENTS FOR FOUNDATION, EMBEDMENT, AND FILL MATERIALS.
4. THE SITE DESIGN ENGINEER IS RESPONSIBLE FOR ASSESSING THE BEARING RESISTANCE (ALLOWABLE BEARING CAPACITY) OF THE SUBGRADE SOILS AND THE DEPTH OF FOUNDATION STONE WITH CONSIDERATION FOR THE RANGE OF EXPECTED SOIL MOISTURE CONDITIONS.
5. PERIMETER STONE MUST BE EXTENDED HORIZONTALLY TO THE EXCAVATION WALL FOR BOTH VERTICAL AND SLOPED EXCAVATION WALLS.
6. ONCE LAYER 'C' IS PLACED, ANY SOIL/MATERIAL CAN BE PLACED IN LAYER 'D' UP TO THE FINISHED GRADE. MOST PAVEMENT SUBBASE SOILS CAN BE USED TO REPLACE THE MATERIAL REQUIREMENTS OF LAYER 'C' OR 'D' AT THE SITE DESIGN ENGINEER'S DISCRETION.

STORMTECH SUBSURFACE CHAMBERS STANDARD DETAIL MC-4500

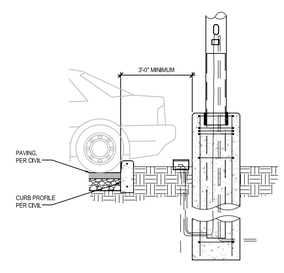

LIGHT POLE LOCATION WHERE PARKING OCCURS

SCALE: 1"=3'

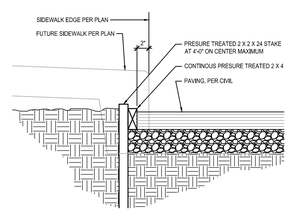

TEMPORARY EDGE OF PAVEMENT

SCALE: 1"=1'

FOR PERMITTING PURPOSES ONLY
NOT RELEASED FOR CONSTRUCTION

© 2020 BL COMPANIES, INC. THESE DRAWINGS SHALL NOT BE UTILIZED BY ANY PERSON, FIRM OR CORPORATION WITHOUT THE SPECIFIC WRITTEN PERMISSION OF BL COMPANIES.

10/20/2020, KKLEGIS, G:\-CIVIL\13\13C4718\DWG\DN13C471801.DWG,DN-8-24X36,NTS,

Architecture
Engineering
Environmental
Land Surveying
BL Companies
100 Constitution Plaza, 10th Floor
Hartford, CT 06103
(860) 249-2200
(860) 249-2400 Fax

STATE OF CONNECTICUT MICHELLE M. CARLSON No.20951 LICENSED PROFESSIONAL ENGINEER

PROPOSED DEVELOPMENT
EVERGREEN WALK - UNIT 12
151 BUCKLAND ROAD
SOUTH WINDSOR, CONNECTICUT

REVISIONS		
No.	Date	Desc.
1	01/06/2020	DRAINAGE MODIFICATION
2	09/14/2020	PLANNING/WETLANDS SUBMISSION
3	10/20/2020	RESPONSE TO COMMENTS

Designed	J.A.B.
Drawn	S.E.L.
Reviewed	
Scale	N.T.S.
Project No.	13C4718
Date	09/18/2019

CAD File: DN13C471801

Title
SITE DETAILS

Sheet No.
DN–8

Xref (s): - BD13C471801

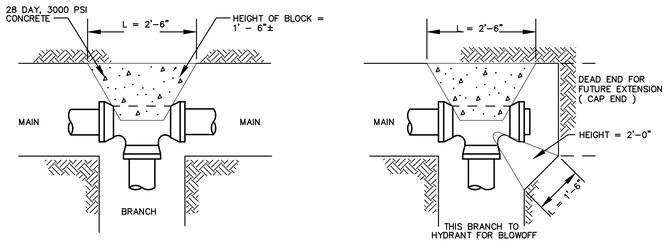

THRUST BLOCKS FOR WATER LINES

N.T.S. BLWD-001

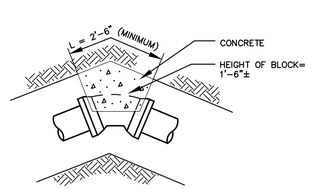

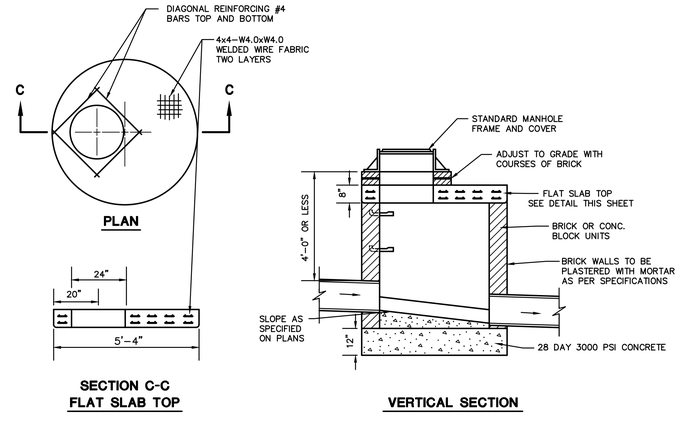

STANDARD SHALLOW SANITARY MANHOLE

N.T.S BLSS-004

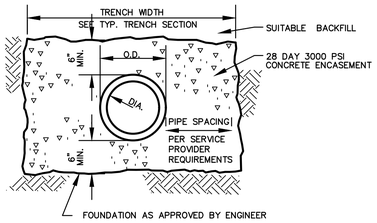

CONCRETE PROTECTION FOR PIPING

N.T.S. BLSS-011

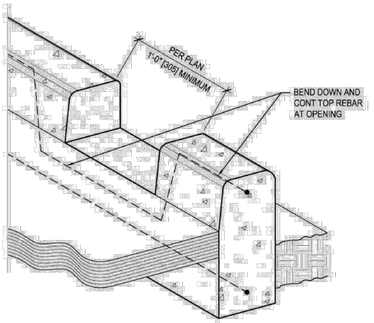

NOTE:
FOR ADDITIONAL NOTES AND DIMENSIONS, SEE DETAIL CAST-IN-PLACE CONC CURB - CURB AND GUTTER SIMILAR
09 03

CURB OPENING FOR DRAINAGE

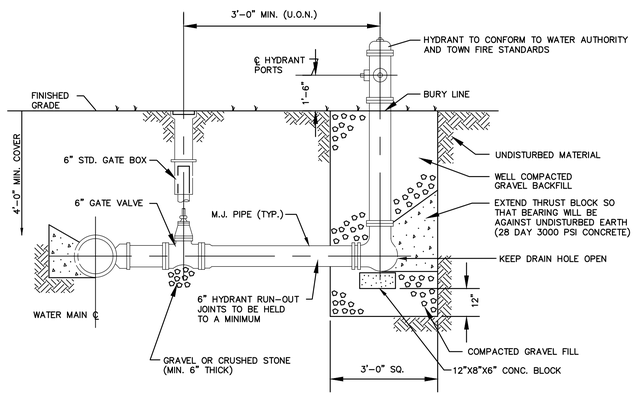

HYDRANT ASSEMBLY DETAIL

N.T.S. BLWD-003

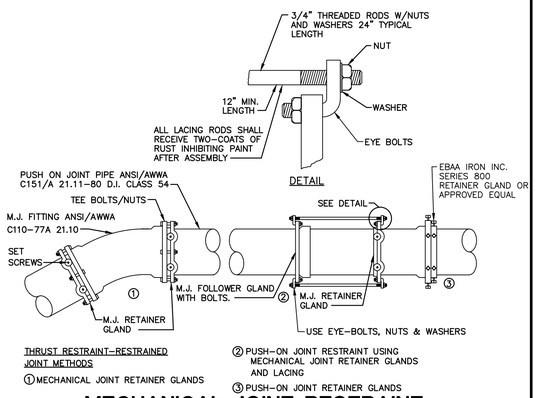

MECHANICAL JOINT RESTRAINT

N.T.S.

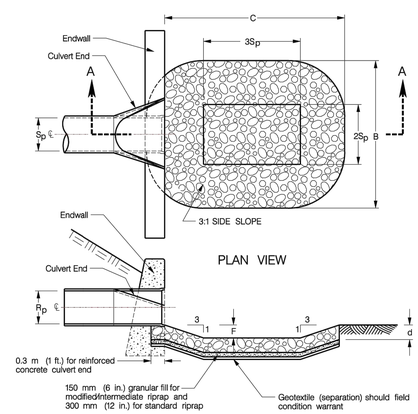

NOTE:
REFER TO GRADING AND DRAINAGE PLAN FOR SCOUR HOLE DIMENSIONS

LEGEND

S_p = Max. inside pipe span (non-circular sections); Inside pipe diameter (circular sections)

R_p = Max. inside pipe rise (non-circular sections); Inside pipe diameter (circular sections)

d = 300 mm (12 in.) Modified Riprap; 450 mm (18 in.) Intermediate Riprap; 900 mm (36 in.) Standard Riprap

Type 1 F = 0.5 R_p

Type 2 F = R_p

C = $3S_p$ + 6F

B = $2S_p$ + 6F

SCOUR HOLE

N.T.S.

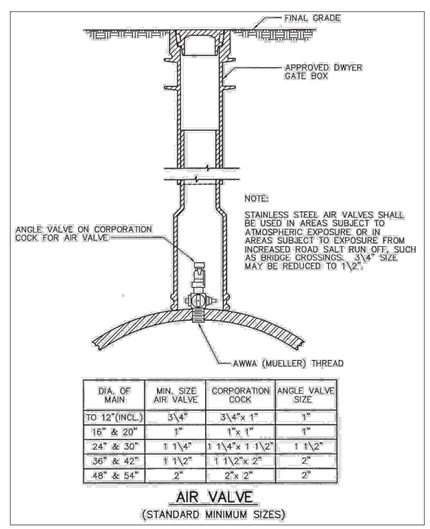

DIA. OF MAIN	MIN. SIZE AIR VALVE	CORPORATION COCK	ANGLE VALVE SIZE
TO 12"(INCL.)	3\4"	3\4"x 1"	1"
16" & 20"	1"	1"x 1"	1"
24" & 30"	1 1\4"	1 1\4"x 1 1\2"	1 1\2"
36" & 42"	1 1\2"	1 1\2"x 2"	2"
48" & 54"	2"	2"x 2"	2"

AIR VALVE

(STANDARD MINIMUM SIZES)

AIR VALVE DETAIL

N.T.S.

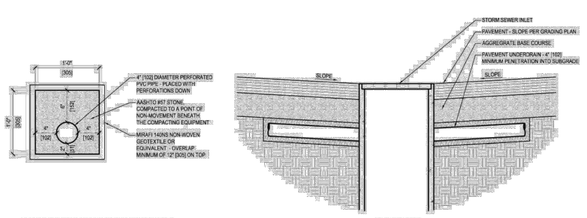

NOTE:
PAVEMENT UNDERDRAINS SHALL EXTEND OUT A MINIMUM OF 10 FEET [3048] FROM ALL SIDES OF INLETS BELOW PAVEMENT

DRAINAGE REQUIREMENTS AT INLETS

FOR PERMITTING PURPOSES ONLY
NOT RELEASED FOR CONSTRUCTION

© 2020 BL COMPANIES, INC. THESE DRAWINGS SHALL NOT BE UTILIZED BY ANY PERSON, FIRM OR CORPORATION WITHOUT THE SPECIFIC WRITTEN PERMISSION OF BL COMPANIES.

10/20/2020, KEKLUSS, C:\JOBS\13\13C\13C-4718\DWG\DN13C471801.DWG, DN1-9 24X36.HTS,

Architecture
Engineering
Environmental
Land Surveying
BL Companies
100 Constitution Plaza, 10th Floor
Hartford, CT 06103
(860) 249-2200
(860) 249-2400 Fax

STATE OF CONNECTICUT MICHELLE M. CARLSON No.20951 LICENSED PROFESSIONAL ENGINEER

PROPOSED DEVELOPMENT

EVERGREEN WALK - UNIT 12
151 BUCKLAND ROAD
SOUTH WINDSOR, CONNECTICUT

REVISIONS

No.	Date	Desc:
1	01/06/2020	DRAINAGE MODIFICATION
2	09/14/2020	PLANNING & ZONING SUBMISSION
3	10/20/2020	RESPONSE TO COMMENTS

Designed	J.A.B.
Drawn	S.E.L.
Reviewed	
Scale	N.T.S.
Project No.	13C4718
Date	09/18/2019
CAD File:	DN13C471801

Title

SITE DETAILS

Sheet No.

DN-9

Xref (s): - BD13C471801

CONTROL DESIGNER TO SUBMIT FULL SHOP DRAWINGS OF CONTROLS AND PANEL LAYOUT

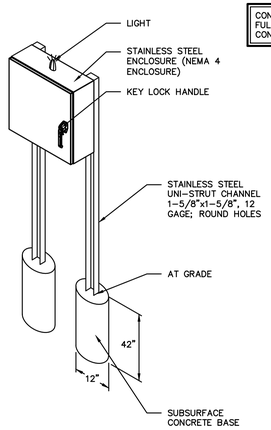

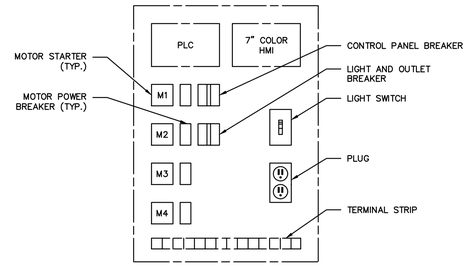

SCHEMATIC PANEL LAYOUT

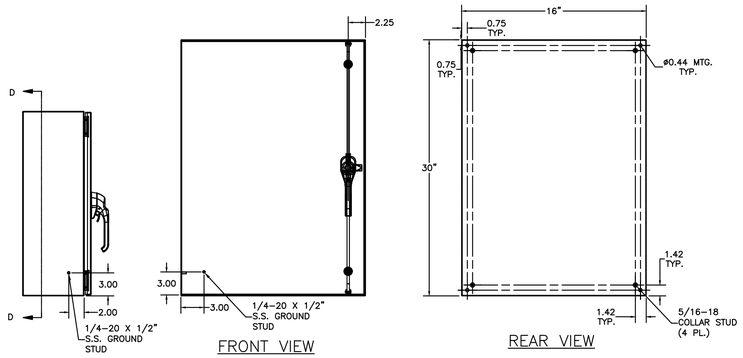

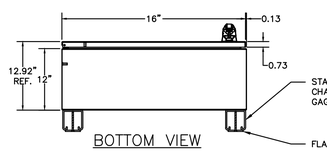

NOTE:
SIZE OF ENCLOSURE MAY DIFFER FROM WHAT IS SHOWN DEPENDING ON FINAL DESIGN.

POLE MOUNTED STAINLESS STEEL ELECTRICAL ENCLOSURE

SCALE: NTS

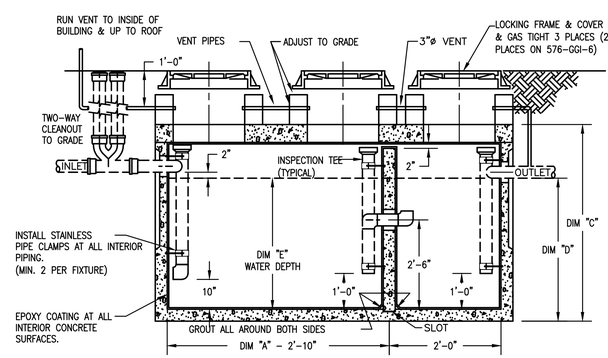

NOTES:
1. DESIGNED PER IAPMO/ANSI Z1001; MANUFACTURED PER ASTM C1613
2. CONCRETE: 28 DAY COMPRESSIVE STRENGTH F'C = 7000 PSI.
3. REBAR: ASTM A-615 GRADE 60; MESH: ASTM A-185 GRADE 65.
4. DESIGN: ACI-318-02 BUILDING CODE ASTM C-857 "MINIMUM STRUCTURAL DESIGN LOADING FOR UNDERGROUND PRECAST CONCRETE UTILITY STRUCTURES".
5. LOADING PER ASTM C890 FOR AASHTO HS20-44 VEHICLE LOADING.
6. FILL W/ CLEAN WATER PRIOR TO START-UP OF SYSTEM.
7. CONTRACTOR TO SUPPLY & INSTALL ALL PIPING & SAMPLING TEES.
8. GREY WATER ONLY. BLACK WATER SHALL BE CARRIED BY SEPARATE SIDE SEWER.
9. INTERCEPTOR SHALL BE APPROVED BY ALL AUTHORITIES HAVING JURISDICTION.

	GI-1	GI-2
GALLON CAPACITY	1500	1000
UV CO. MODEL NO.	5106-GGI-6	576-GGI-6
DIM "A"	11'-2"	7'-6"
DIM "B"	5'-8"	5'-0"
DIM "C"	7'-2"	7'-8"
DIM "D"	4'-5"	5'-3"
WATER DEPTH DIM "E"	4'-0"	4'-9"

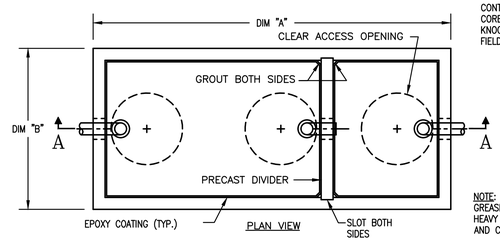

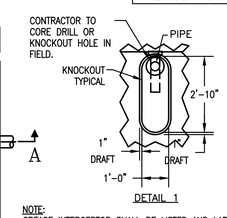

MANHOLE COVERS SHALL BE LABELED "SEWER"

ALL MANHOLE COVERS TO BE LOCATED WITHIN DESIGNATED CONCRETE PAD AND PAINTED BLACK.

NOTE:
GREASE INTERCEPTOR SHALL BE LISTED AND LABELED AND APPROVED FOR HEAVY TRAFFIC AND PROVIDED WITH PROTECTION FOR HIGHLY EXPANSIVE AND CORROSIVE SOILS.

GREASE INTERCEPTOR DETAIL GI-1,2

SCALE: NONE

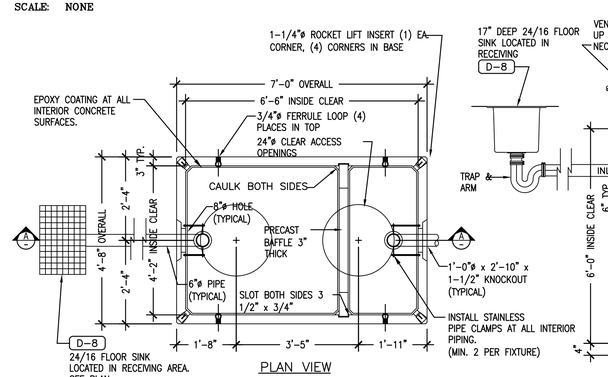

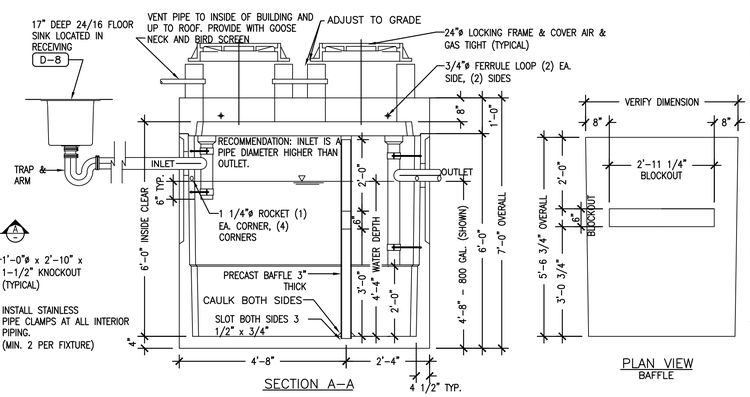

STRUCTURAL NOTES:
1. CONCRETE: DAY COMPRESSIVE STRENGTH F'C = 4500 PSI.
2. REBAR: ASTM A-615 GRADE 60
3. MESH: ASTM A-185 GRADE 65
4. DESIGN: ACI-318-99 BUILDING CODE
5. LOADS: H-20 TRUCK WHEEL P = 16.0 KIP ASTM C-856 "MINIMUM STRUCTURAL DESIGN LOADING FOR UNDERGROUND PRECAST CONCRETE UTILITY STRUCTURES" 30% IMPACT FOR LESS THAN 3 FT. SOIL COVER.

GENERAL NOTES:
1. CONTRACTOR TO VERIFY ALL BLOCKOUT SIZES AND LOCATIONS DO ALL GROUTING & EPOXY OF VAULTS, HOLES AND SEAMS SUPPLY & INSTALL ALL PIPING & ELECTRICAL DO ALL PAINTING.
2. OUTLET PIPE CAN BE ADJUSTED TO INCREASE OR DECREASE GALLON CAPACITY.

SHIPPING WEIGHT:
TOP SECTION= 3,245 LBS
BASE SECTION = 7,595 LBS
BAFFLE = 775 LBS
TOTAL WEIGHT = 11,615 LBS

INSERTS:
TOP SECTION= (4) 3/4"ø FERRULE LOOP
BASE SECTION = (4) 1-1/4"ø ROCKET

SAND SEPARATOR S/S

SCALE: NONE

FOR PERMITTING PURPOSES ONLY
NOT RELEASED FOR CONSTRUCTION

Architecture
Engineering
Environmental
Land Surveying

BL Companies

100 Constitution Plaza, 10th Floor
Hartford, CT 06103
(860) 249-2200
(860) 249-2400 Fax

STATE OF CONNECTICUT
MICHELLE M. CARLSON
No. 20951
LICENSED PROFESSIONAL ENGINEER

PROPOSED DEVELOPMENT

EVERGREEN WALK - UNIT 12
151 BUCKLAND ROAD
SOUTH WINDSOR, CONNECTICUT

REVISIONS

No.	Date	Desc.
1	01/06/2020	DRAINAGE MODIFICATION
2	09/14/2020	PLANNING & ZONING SUBMISSION
3	10/20/2020	RESPONSE TO COMMENTS

Designed	J.A.B.
Drawn	S.E.L.
Reviewed	
Scale	N.T.S.
Project No.	13C4718
Date	09/18/2019

CAD File: DN13C471801

Title

SITE DETAILS

Sheet No.

DN-10

© 2020 BL COMPANIES, INC. THESE DRAWINGS SHALL NOT BE UTILIZED BY ANY PERSON, FIRM OR CORPORATION WITHOUT THE SPECIFIC WRITTEN PERMISSION OF BL COMPANIES.

10/20/2020, MDEGUISS, G:\JOBS\13\13C\13C4718\DWG\DN13C471801.DWG DN-10 24X36.NTS

Xref (s): BD13C471801

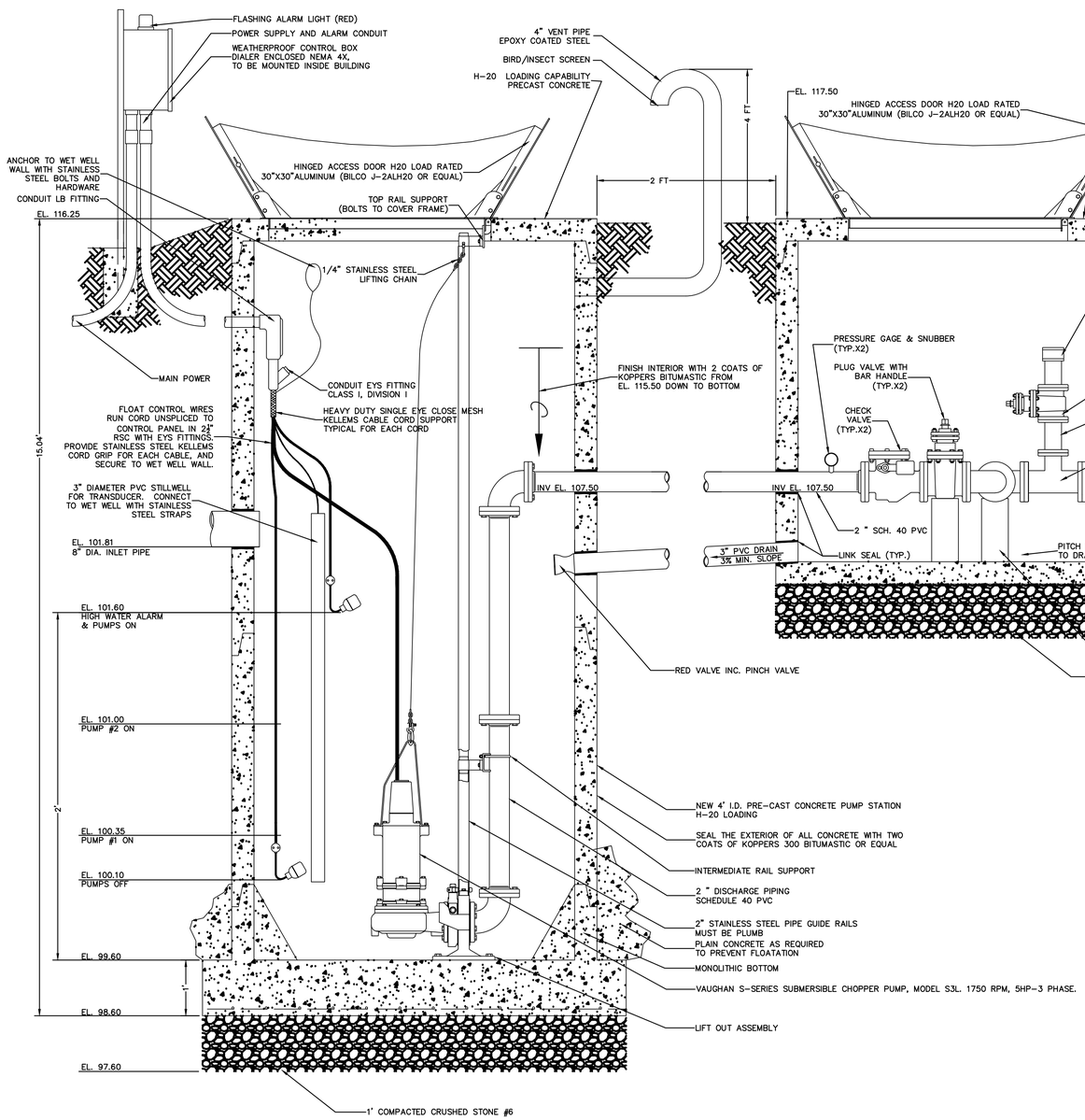

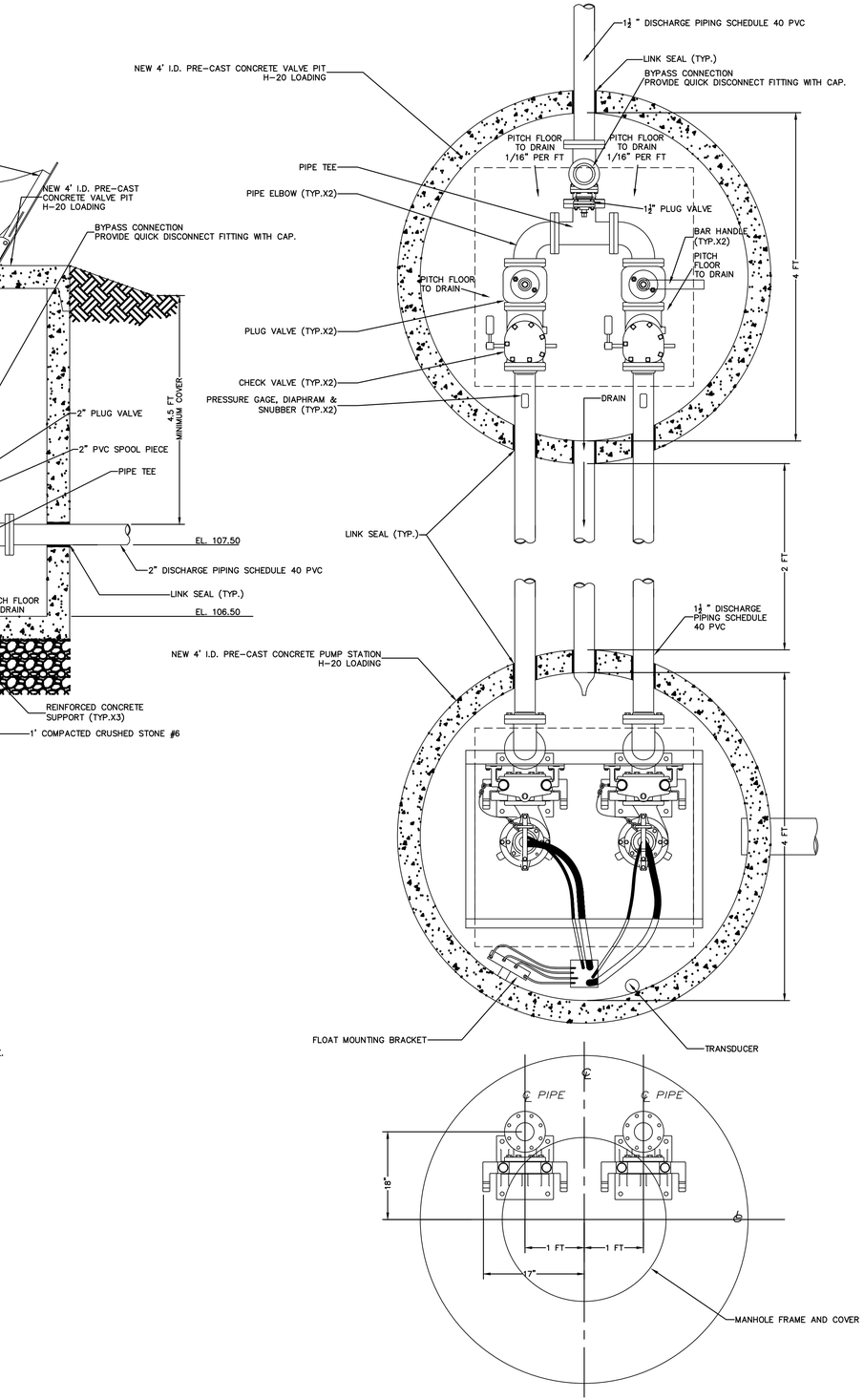

SANITARY SEWER PUMP STATION

N.T.S

FOR PERMITTING PURPOSES ONLY
NOT RELEASED FOR CONSTRUCTION

Architecture
Engineering
Environmental
Land Surveying

BL Companies

100 Constitution Plaza, 10th Floor
Hartford, CT 06103
(860) 249-2200
(860) 249-2400 Fax

STATE OF CONNECTICUT MICHELLE M. CARLSON No.20951 LICENSED PROFESSIONAL ENGINEER

PROPOSED DEVELOPMENT
EVERGREEN WALK - UNIT 12
151 BUCKLAND ROAD
SOUTH WINDSOR, CONNECTICUT

REVISIONS

No.	Date	Desc.
1	01/06/2020	DRAINAGE MODIFICATION
2	09/04/2020	PLANNING & ZONING SUBMISSION
3	10/20/2020	RESPONSE TO COMMENTS

Designed	J.A.B.
Drawn	S.E.L.
Reviewed	
Scale	N.T.S.
Project No.	13C4718
Date	09/18/2019

CAD File: DN13C471801

Title

SITE DETAILS

Sheet No.

DN-11

Xref (s) - BD13C-471801

10/20/2020, KKLEGASS, G:\JOBS13\13C\13C4718\DWG\DN13C471801.DWG,DN-11 24X36 NTS,

© 2020 BL COMPANIES, INC. THESE DRAWINGS SHALL NOT BE UTILIZED BY ANY PERSON, FIRM OR CORPORATION WITHOUT THE SPECIFIC WRITTEN PERMISSION OF BL COMPANIES.

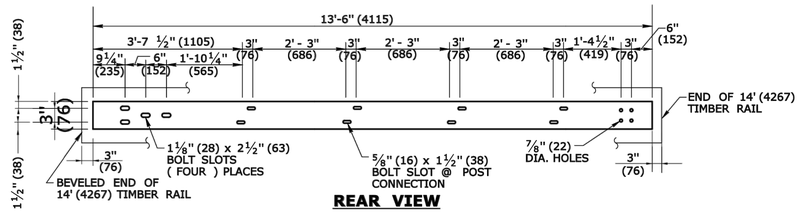

REAR VIEW

STEEL TRANSITION RAIL 6" x 3/8" x 13'-6" (152x9x4115) FOR LEADING END ATTACHMENT

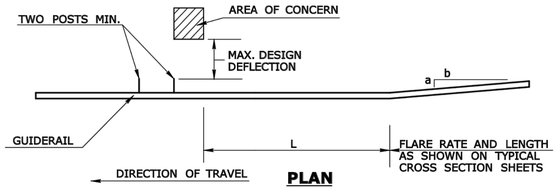

PLAN

APPROACH TO FIXED OBJECTS SYSTEM 2 AND 3

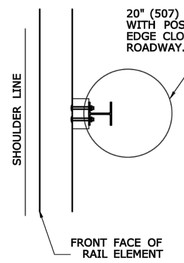

PLAN

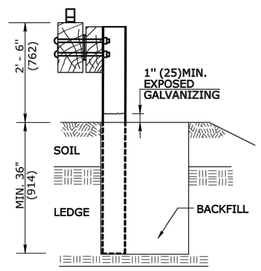

CASE 1

(CURBLESS SECTION SHOWN)

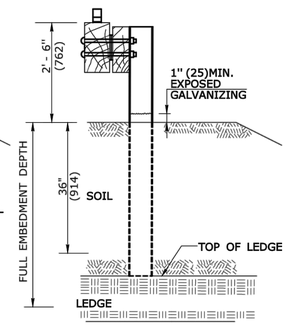

CASE 2

(CURBLESS SECTION SHOWN)

DRILLING HOLE FOR GUIDERAIL POST

(SEE GENERAL NOTES 2-3)

GENERAL NOTES:

1. THIS DRAWING SHOWS LEADING END ATTACHMENT TO PROPOSED BARRIER/PARAPET. AT EXISTING PARAPETS ATTACH GUIDERAIL USING D.O.T. APPROVED CHEMICAL ANCHORS.
2. PRIOR TO GUIDERAIL POST INSTALLATION THE CONTRACTOR SHALL INVESTIGATE POST LOCATIONS FOR THE PRESENCE AND DEPTH OF LEDGE.
3. 20" (507) DIA. EXCAVATED HOLE SHALL BE BACKFILLED WITH SUITABLE MATERIAL, OR GRANULAR FILL COMPACTED IN 6" (150) LIFTS BEFORE DRIVING POST OR POSTS MAY BE SET IN EXCAVATED HOLE AND BACKFILLED WITH CONTROLLED LOW STRENGTH MATERIAL (CLSM).

Maximum Design Deflection (ft) (mm)	Area Of Concern Plus 2 Posts (see sketch)	SYSTEM 3	SYSTEM 2	Standard System	L
		W6x15 (W150x22) Posts Spaced at 2'- 6" (762)	W6x15 (W150x22) Posts Spaced at 5' (1524)	W6x15 (W150x22) Posts Spaced at 10' (3048)	Min. Length Needed
1' (305)	System 3	10' (3048)	10' (3048)	50' (16.40m)	70' (21.34m)
2' - 6" (762)	System 2	–	10' (3048)	60' (19.68m)	70' (21.34m)
4' (1219)	Standard System	–	–	70' (21.34m)	70' (21.34m)

MERRITT PARKWAY GUIDERAIL DESIGN DEFLECTION CHART

CASE 1: IF LEDGE IS LOCATED WITHIN 36" (914) OF THE FINISHED GRADE AT THE POST LOCATION A 20" (507) DIAMETER HOLE SHALL BE DRILLED IN THE LEDGE TO THE MINIMUM EMBEDMENT DEPTH OF 36" (914) AND THE POST SHALL BE CUT AND DRIVEN TO ACHIEVE THIS DEPTH.

CASE 2: IF LEDGE IS LOCATED AT A DEPTH GREATER THAN 36" (914) BUT LESS THAN THE FULL EMBEDMENT DEPTH THE POST SHALL BE CUT AND DRIVEN TO ACHIEVE EMBEDMENT TO THE DEPTH OF THE TOP OF LEDGE.

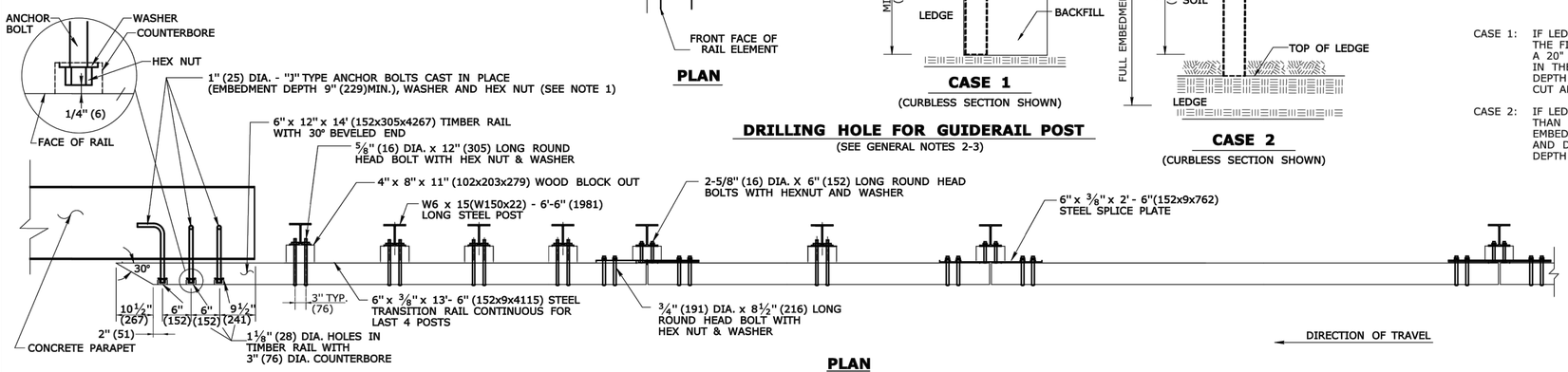

PLAN

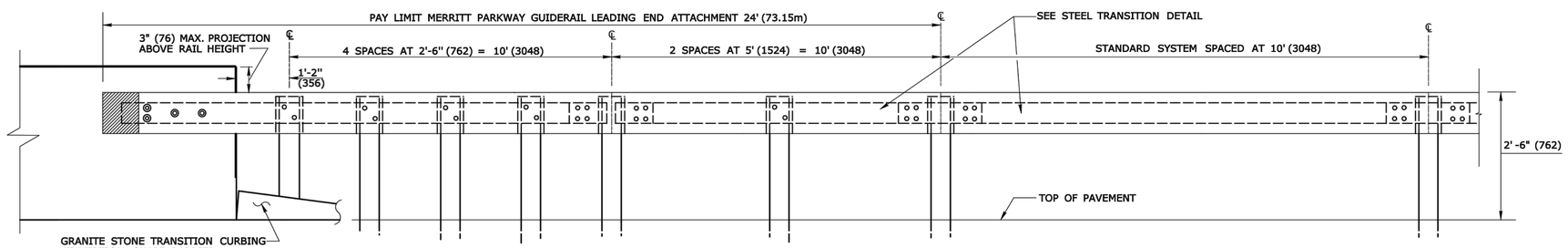

ELEVATION

ATTACHMENT AT LEADING END (VERTICAL SHAPE BARRIER SHOWN) (FRONT VIEW)

(SEE GENERAL NOTES 1)

ALL METRIC DIMENSIONS ARE IN MILLIMETERS (mm) UNLESS OTHERWISE NOTED.

	NOT TO SCALE ####	SIGNATURE BLOCK: OFFICE OF ENGINEERING 2800 BERLIN TURNPIKE NEWINGTON, CT 06111	SUBMITTED BY: Leo Fontaine, P.E. 2020.07.08 10:07:06-04'00'	APPROVED BY: James Fallon, P.E. 2020.07.15 10:07:15-04'00'	STATE OF CONNECTICUT DEPARTMENT OF TRANSPORTATION	CTDOT STANDARD SHEET

STANDARD SHEET TITLE: **MERRITT PARKWAY GUIDERAIL LEADING END ATTACHMENT AND SYSTEMS 2 AND 3**

STANDARD SHEET NO.: **HW-910_12a**

PLOTTED DATE: 7/1/2020

FOR PERMITTING PURPOSES ONLY
NOT RELEASED FOR CONSTRUCTION

© 2020 BL COMPANIES, INC. THESE DRAWINGS SHALL NOT BE UTILIZED BY ANY PERSON, FIRM OR CORPORATION WITHOUT THE SPECIFIC WRITTEN PERMISSION OF BL COMPANIES.

Architecture Engineering Environmental Land Surveying
BL Companies
100 Constitution Plaza, 10th Floor
Hartford, CT 06103
(860) 249-2200
(860) 249-2400 Fax

STATE OF CONNECTICUT MICHELLE M. CARLSON No.20951 LICENSED PROFESSIONAL ENGINEER

PROPOSED DEVELOPMENT
EVERGREEN WALK - UNIT 12
151 BUCKLAND ROAD
SOUTH WINDSOR, CONNECTICUT

REVISIONS

No.	Date	Disc.
1	01/06/2020	DRAINAGE MODIFICATION
2	09/14/2020	PLANNING & ZONING SUBMISSION
3	10/20/2020	RESPONSE TO COMMENTS

Designed	J.A.B.
Drawn	S.E.L.
Reviewed	
Scale	N.T.S.
Project No.	13C4718
Date	09/18/2019
CAD File: DN13C471801	

Title: SITE DETAILS

Sheet No. DN-12

10/20/2020, KYLEGISS, G:\J-DRIVE\13\13C4718\DWG\DN13C471801.DWG,DN-12 24X36.NTS

Xref (s): - BD13C471801

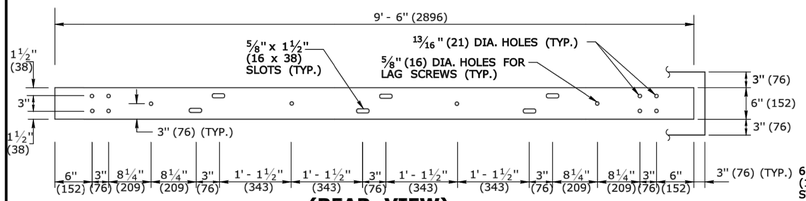

(REAR VIEW)
STANDARD STEEL RAIL DETAIL
6" x 3/8" x 9'-6"
(152x9x2896)

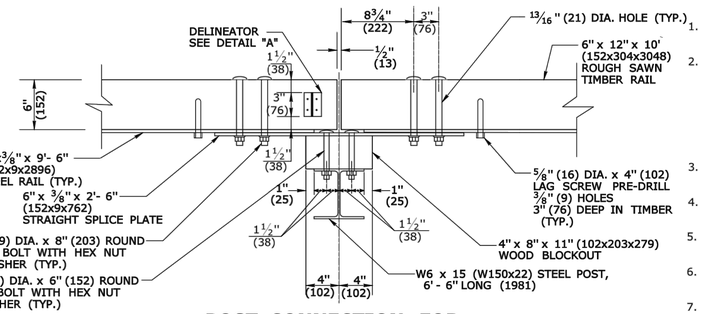

POST CONNECTION FOR STRAIGHT SECTIONS

GENERAL NOTES:

1. MATERIALS AND CONSTRUCTION OF THE MERRITT PARKWAY GUIDERAIL SHALL CONFORM TO SPECIAL PROVISION PROVIDED WITH THE PROJECT.
2. DELINEATORS SHALL BE PLASTIC INVERTED T-SECTIONS IN ACCORDANCE WITH DETAIL "A". REFLECTORS SHALL BE SPACED IN ACCORDANCE WITH TABLE 1 , AND POSITIONED PERPENDICULAR TO THE ADJACENT EDGE OF LANE. DO NOT ATTACH REFLECTORS ON FLARE OR TERMINAL SECTIONS. REFLECTIVE SHEETING SHALL BE SILVER-WHITE ON ALL RAIL SECTIONS ADJACENT TO THE RIGHT SHOULDER, AND YELLOW ON RAIL SECTIONS ADJACENT TO THE LEFT SHOULDER OF TRAVEL LANES. DELINEATORS SHALL BE INCLUDED IN THE COST FOR "MERRITT PARKWAY GUIDERAIL."
3. TWO ADDITIONAL 5/8" (16) DIA. X 4"(102) LONG LAG SCREWS AND WASHERS SHALL BE INSTALLED AT ALL MID-SPAN POINTS FOR STANDARD SYSTEMS.
4. ALL CONNECTION HARDWARE SHALL BE SUFFICIENTLY TIGHTENED TO ACCOMMODATE FOR SHRINKAGE OF THE WOOD ELEMENTS.
5. WHEN FURNISHING THE SHOP BENT SPLICE PLATES, USE THE MINIMUM BEND ANGLE AS SHOWN IN TABLE 2.
6. FOR RAILING SET ON A CURVE WITH RADII < 70' (21.3m) SPACE POSTS AT 5' (1524).
7. GUIDERAIL HEIGHT MAY VARY UP TO 2" (51) PLUS OR MINUS THE HEIGHT SHOWN IN THE DETAILS TO ACHIEVE A SMOOTH AND CONTINUOUS GUIDERAIL PROFILE.
8. 7'-6" (2286) LONG POSTS MAY BE USED IN LOCATIONS WHERE 2' (610)MIN SHELF IS NOT ATTAINABLE. GALVANIZED COATING LIMITS SHALL BE INCREASED BY 1' (305). PAYMENT FOR EXTRA LONG POSTS SHALL BE INCLUDED WITH THE ITEM FOR MERRITT PARKWAY GUIDERAIL.

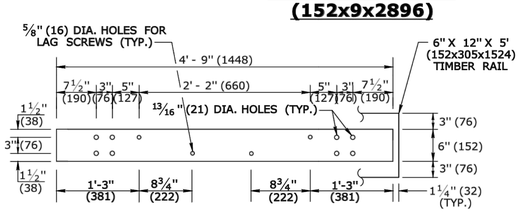

STEEL RAIL DETAIL
6' x 3/8" x 4'-9"
(1829 x 9 x 1448)
FOR CURVES WITH R < 70' (21.3m)

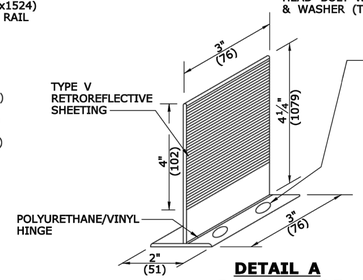

DETAIL A
DELINEATOR

1/4" x 1/2" (6x12) SLOT USE (4) 1" (25) LONG 1/2" (12) DIA. WOOD SCREWS FOR ATTACHING DELINEATOR. SCREW SHALL BE GALVANIZED AFTER FABRICATION IN ACCORDANCE W/ ASTM A-153.

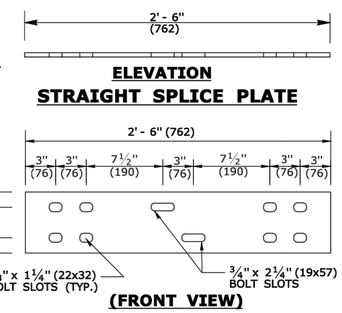

ELEVATION
STRAIGHT SPLICE PLATE

(FRONT VIEW)
STEEL SPLICE PLATE DETAIL
6" x 3/8" x 2'- 6"
(152x9x762)

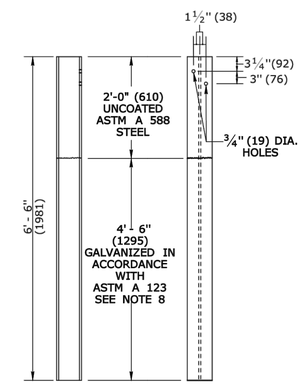

SIDE VIEW FRONT VIEW
POST DETAIL
W6 X 15
(W150x22)
WITH CURBING

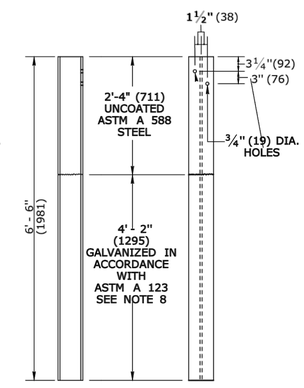

SIDE VIEW FRONT VIEW
POST DETAIL
W6 X 15
(W150x22)
NO CURBING

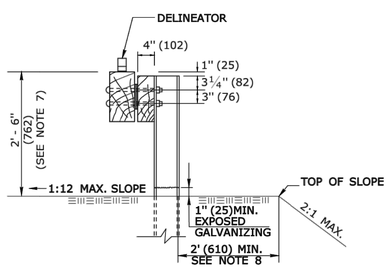

SECTION A
(NO CURB)

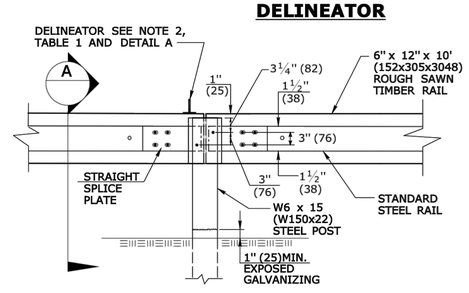

REAR VIEW ELEVATION
POST CONNECTION

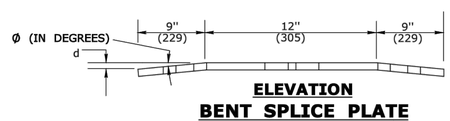

ELEVATION
BENT SPLICE PLATE

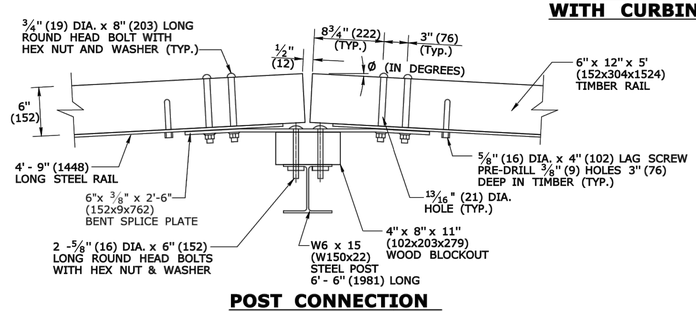

POST CONNECTION
FOR CURVES WITH R < 70' (21.3m)

TABLE 1

DELINEATOR SPACING	
CURVE RADIUS	SPACE
< 300' (91.4m)	20' (6.10m)
≥ 300' (91.4m)	50' (15.2m)

TABLE 2

Radius R (ft.)(m)	Ø (Degrees)	d (in.)(mm)
35 (10.7)Min.	4.10	5/8(16)
40 (12.2)	3.58	9/16 (14)
45 (13.7)	3.18	1/2(13)
50 (15.2)	2.86	7/16 (11)
55 (16.8)	2.60	7/16 (11)
60 (18.3)	2.40	3/8(9)
65 (19.8)	2.20	3/8(9)
70 (21.3)	2.05	5/16 (8)
Over 70 (21.3)	Flat	0

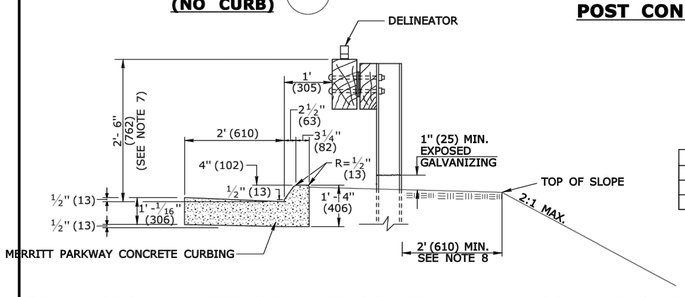

MERRITT PARKWAY CONCRETE CURBING WITH MERRITT PARKWAY GUIDERAIL

ALL METRIC DIMENSIONS ARE IN MILLIMETERS (mm) UNLESS OTHERWISE NOTED.

	NOT TO SCALE ####	SIGNATURE BLOCK: OFFICE OF ENGINEERING 2800 BERLIN TURNPIKE NEWINGTON, CT 06111	SUBMITTED BY: Leo Fontaine, P.E. 2020.07.08 10:07:39-04'00'	APPROVED BY: James Fallon, P.E. 2020.07.15 10:07:33-04'00'	STATE OF CONNECTICUT DEPARTMENT OF TRANSPORTATION	CTDOT STANDARD SHEET	STANDARD SHEET TITLE: MERRITT PARKWAY GUIDERAIL HARDWARE DETAILS	STANDARD SHEET NO.: HW-910_12b

PLOTTED DATE: 7/1/2020

FOR PERMITTING PURPOSES ONLY
NOT RELEASED FOR CONSTRUCTION

© 2020 BL COMPANIES, INC. THESE DRAWINGS SHALL NOT BE UTILIZED BY ANY PERSON, FIRM OR CORPORATION WITHOUT THE SPECIFIC WRITTEN PERMISSION OF BL COMPANIES.

Architecture Engineering Environmental Land Surveying
BL Companies
100 Constitution Plaza, 10th Floor
Hartford, CT 06103
(860) 249-2200
(860) 249-2400 Fax

STATE OF CONNECTICUT MICHELLE M. CARLSON No.20951 LICENSED PROFESSIONAL ENGINEER

PROPOSED DEVELOPMENT
EVERGREEN WALK - UNIT 12
151 BUCKLAND ROAD
SOUTH WINDSOR, CONNECTICUT

REVISIONS

No.	Date	Desc.
1	07/06/2020	DRAINAGE AND SPECIAL PROVISION
2	09/04/2020	REVISED PER CTDOT SUBMISSION
3	10/20/2020	RESPONSE TO COMMENTS

Designed	J.A.B.
Drawn	S.E.L.
Reviewed	
Scale	N.T.S.
Project No.	13C4718
Date	09/18/2019
CAD File: DN13C471801	

Title
SITE DETAILS

Sheet No.
DN-13

Xref (s): - BD13C471801

10/20/2020, KKILGUSS, G:\JOBS\31\13C\13C4718\DWG\CIVIL\13C471801.DWG DN-13 24X36 NTS

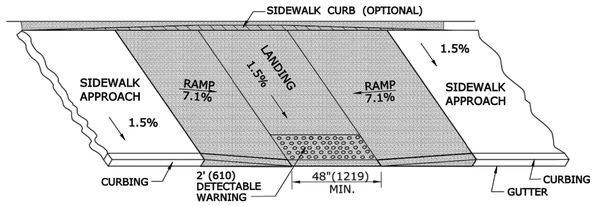

PARALLEL SIDEWALK RAMP (TYPE 1) NO UTILITY STRIP

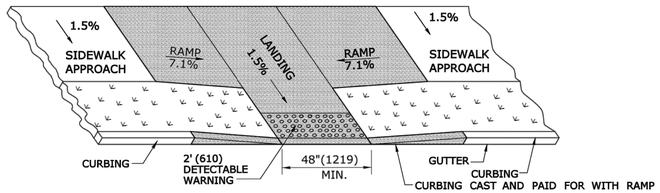

PARALLEL SIDEWALK RAMP (TYPE 1a)
WITH UTILITY / GRASS STRIP

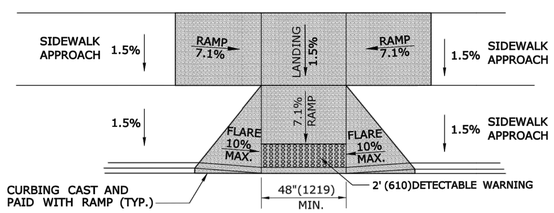

PARALLEL/PERPENDICULAR SIDEWALK RAMP
NO UTILITY/GRASS STRIP (TYPE 1b)

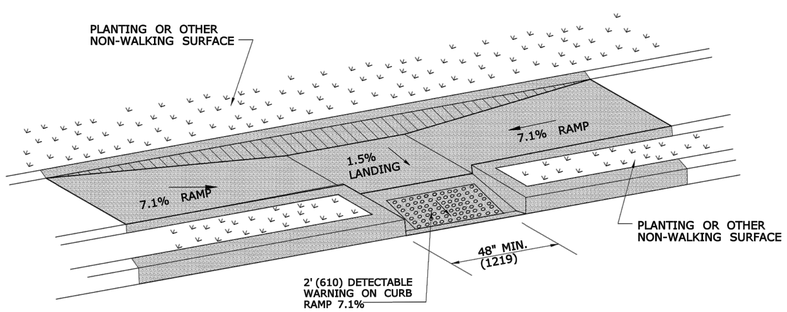

PARALLEL SIDEWALK RAMP (TYPE 1c)
WITH UTILITY / GRASS STRIP

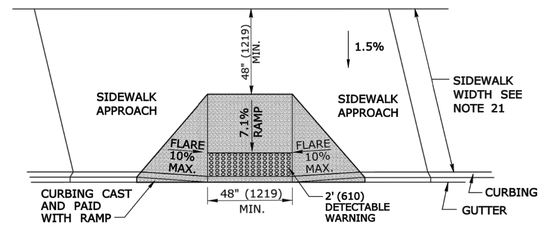

PERPENDICULAR SIDEWALK RAMP
W/ 48" (1219) MIN. BY PASS LANDING (TYPE 2)

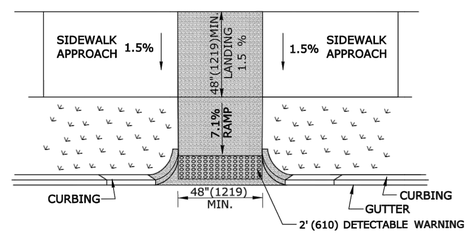

PERPENDICULAR SIDEWALK RAMP
W/CURB RETURNS / UTILITY GRASS STRIP (TYPE 2a)

* OPTIONAL FLARE ONE SIDE OF RAMP

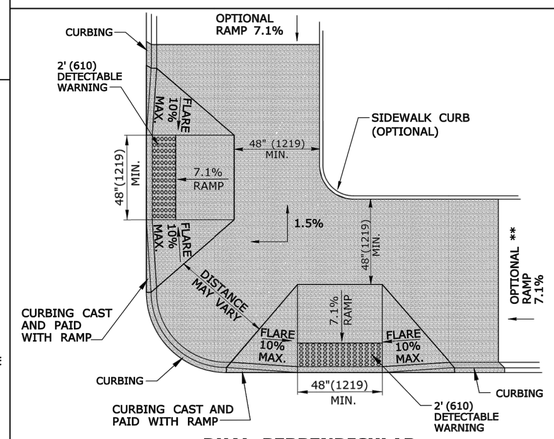

DUAL PERPENDICULAR
SIDEWALK RAMPS (TYPE 3)

SEE NOTES 19
* OPTIONAL CURB RETURN ON ONE SIDE OF RAMP
** SEE NOTE 23

GENERAL NOTES:

1. MAXIMUM SLOPES OF ADJOINING GUTTERS AND ROAD SURFACES IMMEDIATELY ADJACENT TO THE SIDEWALK RAMP SHOULD NOT EXCEED 5%. THE MAXIMUM GRADE DIFFERENCE BETWEEN THE GUTTER AND CURB RAMP SHALL NOT EXCEED 13%. SEE DETAIL 1 ON SHEET 4.
2. RAMP GRADE SHALL BE UNIFORM, FREE OF SAGS AND ABRUPT GRADE CHANGES. RUNNING SLOPES OF RAMPS SHALL NOT EXCEED 8.33% AND SHALL NOT EXCEED 15' (4.5m) WITHOUT PROVIDING A LANDING.
3. ALL RAMPS SHALL BE CONSTRUCTED OF CLASS "F" CONCRETE IN ACCORDANCE WITH CONNECTICUT STANDARD SPECIFICATIONS.
4. SIDEWALK RAMPS SHALL HAVE A COARSE BROOM FINISH TRANSVERSE TO THE SLOPE OF THE RAMP. THE SURFACE OF ALL SIDEWALK RAMPS SHALL BE STABLE, FIRM AND SLIP RESISTANT. SURFACE DISCONTINUITIES SHALL NOT EXCEED ½" (13) MAX. VERTICAL DISCONTINUITIES BETWEEN ¼" (6.4) AND ½" (13) MAX. SHALL BE BEVELED 1:2 MINIMUM APPLIED ACROSS THE ENTIRE LEVEL CHANGE.
5. DIAGONAL SIDEWALK RAMPS AT MARKED CROSSINGS SHALL BE WHOLLY CONTAINED WITHIN THE MARKINGS, EXCLUDING ANY FLARED SIDES. DIAGONAL AND PERPENDICULAR RAMPS SHALL HAVE THE RAMP CUT PERPENDICULAR TO THE TANGENT OF THE CURB RADIUS FOR THE DESIGNATED ACCESSIBLE ROUTE. BOTH LONGITUDINAL SIDES OF THE RAMP SHOULD BE THE SAME LENGTH. SKEWED RAMPS SHOULD BE AVOIDED. FLARES ARE NOT CONSIDERED PART OF PEDESTRIAN ACCESS ROUTE. DIAGONAL RAMPS SHOULD NOT BE INSTALLED WHERE CURB RADII IS LESS THAN 20'(6096).
6. REMOVAL OF EXISTING SIDEWALK FOR NEW RAMP INSTALLATIONS SHALL BE TO THE NEAREST EXPANSION OR CONTRACTION JOINT. 8.3% MAXIMUM SLOPE MAY NOT BE ACHIEVABLE DUE TO EXISTING SIDEWALK GRADE. IN RECOGNITION OF THIS, A LIMIT OF 15' (4572) FOR REMOVAL SHALL BE USED UNLESS OTHERWISE SHOWN ON THE PLANS OR DIRECTED BY THE ENGINEER. SAW CUT REQUIRED FOR DUMMY JOINTS SHALL BE INCLUDED IN THE COST OF "CONCRETE SIDEWALK RAMP" OR "CONCRETE SIDEWALK".
7. EXPANSION JOINTS IN CONCRETE SHALL MATCH THOSE IN ADJACENT SIDEWALKS BUT IN NO CASE SHALL THE SPACING BETWEEN EXPANSION JOINTS EXCEED 12' (3658) UNLESS OTHERWISE NOTED.
8. CONCRETE SIDEWALK RAMPS, SHALL BE PAID FOR UNDER THE ITEM "CONCRETE SIDEWALK RAMP", AS DEFINED BY THE CONSTRUCTION LIMITS ON THE PLANS AND SHALL BE FIELD VERIFIED.
9. SIDEWALK RAMPS SHALL BE CONSTRUCTED WITH THE TOE AT THE GUTTER CAST INTEGRALLY WITH RAMP UNLESS DIRECTED OTHERWISE BY THE ENGINEER (SEE TYPICAL SECTION ON SHEET 3). CURB REMOVAL AND CAST IN PLACE CURBING REQUIRED FOR THE RAMP, SHALL BE INCLUDED WITH PAY ITEM "CONCRETE SIDEWALK RAMP". CURBING OUTSIDE LIMITS OF RAMP OR LANDING SHOWN ON SHEET 3 SHALL BE CONSTRUCTED AND PAID FOR IN ACCORDANCE WITH CONNECTICUT STANDARD SPECIFICATIONS.
10. PREFERRED LOCATION TO INSTALL DETECTABLE WARNING STRIP SHALL BE 6" (152) FROM THE EDGE OF ROAD ALONG THE FULL WIDTH OF THE RAMP. FOR ALTERNATE LOCATIONS, REFER TO DETECTABLE WARNING PLACEMENT DETAILS ON SHEET 4.
11. TO PERMIT WHEELCHAIR WHEELS TO ROLL BETWEEN DOMES, ALIGN DOMES ON A SQUARE GRID IN THE DIRECTION OF RUNNING SLOPE (PERPENDICULAR TO CURB OR SLOPE BREAK). THE TRANSITION FROM RAMP TO GUTTER SHALL BE FLUSH WITHOUT A LIP.
12. WHERE COMMERCIAL DRIVEWAYS ARE PROVIDED WITH TRAFFIC SIGNALS AND THE SIDEWALK IS CONTINUOUS THROUGH DRIVEWAY, DETECTABLE WARNINGS ARE REQUIRED AT THE JUNCTION BETWEEN THE PEDESTRIAN ROUTE AND DRIVEWAY.
13. CONSTRUCT A SIDEWALK CURB WHEN THERE IS INSUFFICIENT BUFFER AVAILABLE TO GRADE OR WHEN CALLED FOR IN PLANS. PAID FOR WITH SIDEWALK RAMP WHEN REQUIRED FOR RAMP.
14. THE TOP AND BOTTOM OF RAMPS SHOULD BE PROVIDED WITH A 4' x 4' (1219 x 1219) MINIMUM LEVEL LANDING AREA WITH A CROSS SLOPE LESS THAN OR EQUAL TO 2% IN ANY DIRECTION.
15. UTILITY POLES, LUMINAIRE, PEDESTRIAN OR SIGNAL POLES, GRATES, ACCESS COVERS, AND OTHER APPURTENANCES SHALL NOT BE LOCATED ON RAMPS, LANDINGS, BLENDED TRANSITIONS, AND @ GUTTERS WITHIN THE PEDESTRIAN ACCESS ROUTE.
16. APPROACH SIDEWALK WIDTHS, GRASS STRIP OR UTILITY STRIP WIDTHS MAY VARY.
17. APPROACH SIDEWALK AND LANDING CROSS SLOPE SHALL NOT EXCEED 2%.
18. THE RUNNING OR CROSS SLOPES ON LANDINGS AT MID BLOCK CROSSING MAY BE WARPED TO MEET STREET OR HIGHWAY GRADE.
19. FOR PERPENDICULAR CURB RAMPS A MIN. 4'(1.2m) x 4'(1.2m) LEVEL LANDING SHALL BE PROVIDED AT THE TOP OF CURB RAMP. WHERE THE LEVEL LANDING IS RESTRICTED AT THE BACK OF SIDEWALK THE LEVEL LANDING SHALL BE 4'(1.2m) x 5'(1.5m) WITH THE 5'(1.5m) DIMENSION PROVIDED IN THE DIRECTION OF THE RAMP RUN.
20. FOR PARALLEL CURB RAMPS, A MIN. 4'(1.2m) x 4'(1.2m) LEVEL LANDING SHALL BE PROVIDED AT THE BOTTOM OF CURB RAMP. IF THE LEVEL LANDING IS RESTRICTED ON 2 OR MORE SIDES, THE LEVEL LANDING SHALL BE 4'(1.2m)x 5'(1.5m) WITH THE 5' (1.5m) DIMENSION PROVIDED IN THE DIRECTION OF THE PEDESTRIAN STREET CROSSING.
21. WHEN WIDTH OF SIDEWALK IS ≥48" AND A PERPENDICULAR SIDEWALK RAMP IS INSTALLED, THE FLARED SIDES SHALL BE 10% MAX. IF WIDTH OF SIDEWALK IS <48" THE FLARED SIDES MUST NOT EXCEED 8.33% (12:1).
22. SHADED AREAS ARE TYPICAL PAY LIMITS FOR CONCRETE SIDEWALK RAMP BUT, MAY VARY AS DIRECTED BY THE ENGINEER.
23. OPTIONAL RAMP, WHEN REQUIRED, SHALL BE PAID FOR AS PART OF CONCRETE SIDEWALK RAMP.

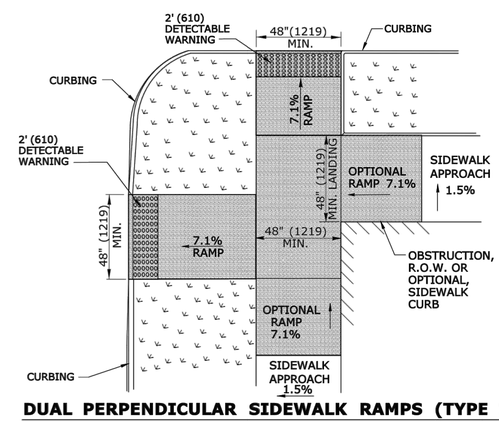

DUAL PERPENDICULAR SIDEWALK RAMPS (TYPE 3a)
WITH UTILITY / GRASS STRIP

SEE NOTE 20

ALL METRIC DIMENSIONS ARE IN MILLIMETERS (mm) UNLESS OTHERWISE NOTED.

REV.	DATE	REVISION DESCRIPTION	SHEET NO.
-	-	-	-
-	-	-	-
-	-	-	-
-	-	-	-
-	-	-	-
1	7/13	Created new sheets (4 total).	-

THE INFORMATION, INCLUDING ESTIMATED QUANTITIES OF WORK, SHOWN ON THESE SHEETS IS BASED ON LIMITED INVESTIGATIONS BY THE STATE AND IS IN NO WAY WARRANTED TO INDICATE THE CONDITIONS OF ACTUAL QUANTITIES OF WORK WHICH WILL BE REQUIRED.

Plotted Date: 11/30/2017

DESIGNER/DRAFTER: MGB/EMK
CHECKED BY: LLF

STATE OF CONNECTICUT
DEPARTMENT OF TRANSPORTATION

Filename: ...\CTDOT_Highway_GD (11-21-17).dgn

SIGNATURE/BLOCK: OFFICE OF ENGINEERING
APPROVED BY:

PROJECT TITLE:

TOWN:

DRAWING TITLE: SIDEWALK RAMPS SHEET 1

PROJECT NO.
DRAWING NO.
SHEET NO.

FOR PERMITTING PURPOSES ONLY
NOT RELEASED FOR CONSTRUCTION

© 2020 BL COMPANIES, INC. THESE DRAWINGS SHALL NOT BE UTILIZED BY ANY PERSON, FIRM OR CORPORATION WITHOUT THE SPECIFIC WRITTEN PERMISSION OF BL COMPANIES.

10/20/2020, KKUGLISS, G:\JOBS13\3C\13C4718\DWG\DN\13C4718D1.DWG DN-14 24X36 NTS.

Architecture
Engineering
Environmental
Land Surveying
BL Companies
100 Constitution Plaza, 10th Floor
Hartford, CT 06103
(860) 249-2200
(860) 249-2400 Fax

STATE OF CONNECTICUT
MICHELLE M. CARLSON
No.20951
LICENSED PROFESSIONAL ENGINEER

PROPOSED DEVELOPMENT
EVERGREEN WALK - UNIT 12
151 BUCKLAND ROAD
SOUTH WINDSOR, CONNECTICUT

REVISIONS

No.	Date	Desc.
1	07/06/2020	DRAINAGE MODIFICATION
2	09/14/2020	PLANNING & ZONING SUBMISSION
3	10/20/2020	RESPONSE TO COMMENTS

Designed	J.A.B.
Drawn	S.E.L.
Reviewed	
Scale	N.T.S.
Project No.	13C4718
Date	09/18/2019
CAD File:	DN13C471801

Title
SITE DETAILS

Sheet No.
DN-14

Xref (s): - BD13C471801

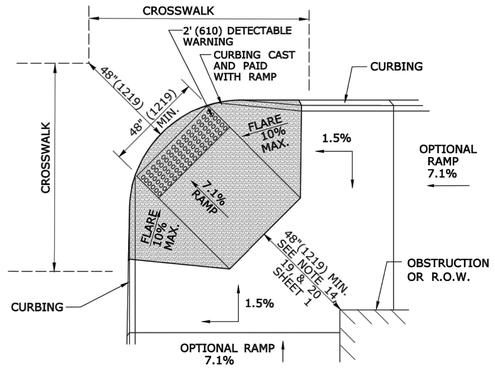

DIAGONAL SIDEWALK RAMP (TYPE 4)
W/LANDING AT TOP

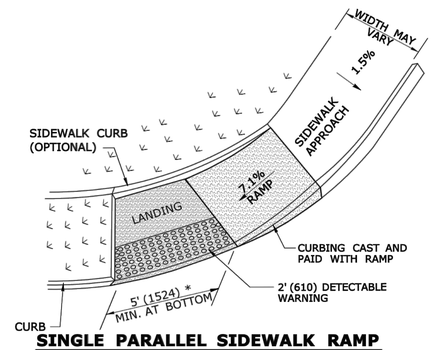

SINGLE PARALLEL SIDEWALK RAMP
W/LANDING AT BOTTOM ON CORNER (TYPE 4c)
* SEE NOTE 20 SHEET 1

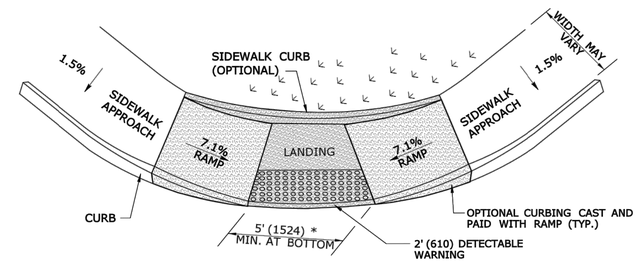

DOUBLE PARALLEL SIDEWALK RAMP
W/LANDING AT BOTTOM ON CORNER (TYPE 4f)
* SEE NOTE 20 SHEET 1

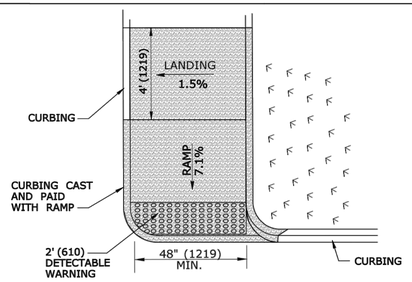

SINGLE DIRECTION
PERPENDICULAR SIDEWALK RAMP
NO / UTILITY GRASS STRIP
(TYPE 4a)

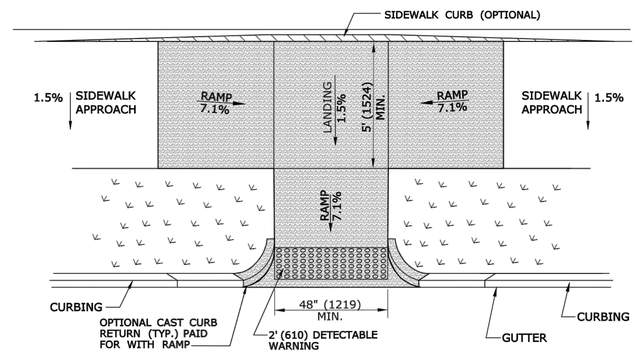

PARALLEL/PERPENDICULAR SIDEWALK RAMP
COMBINATION W/ CURB RETURNS (TYPE 4d)
* OPTIONAL FLARE ONE SIDE

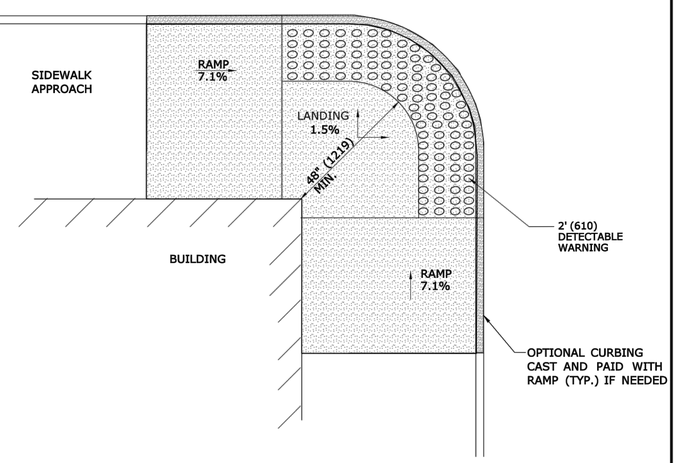

RESTRICTED CONDITION
DIAGONAL SIDEWALK RAMP
(TYPE 4g)

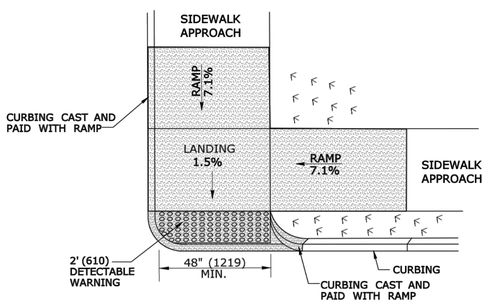

DOUBLE DIRECTION
PARALLEL SIDEWALK RAMP
NO / UTILITY GRASS STRIP
(TYPE 4b)
SEE NOTE 20 SHEET 1

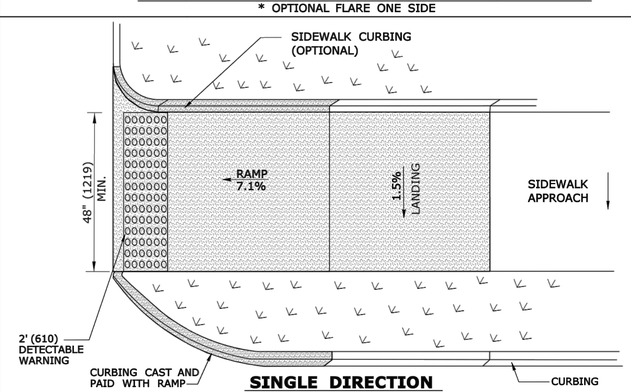

SINGLE DIRECTION
PERPENDICULAR SIDEWALK RAMP
W/ UTILITY GRASS STRIP (TYPE 4e)
REFER TO DETECTABLE WARNING PLACEMENT ON SHEET 4

ALL METRIC DIMENSIONS ARE IN MILLIMETERS (mm) UNLESS OTHERWISE NOTED

REV.	DATE	REVISION DESCRIPTION	SHEET NO.

THE INFORMATION, INCLUDING ESTIMATED QUANTITIES OF WORK, SHOWN ON THESE SHEETS IS BASED ON LIMITED INVESTIGATIONS BY THE STATE AND IS IN NO WAY WARRANTED TO INDICATE THE CONDITIONS OF ACTUAL QUANTITIES OF WORK WHICH WILL BE REQUIRED.

Plotted Date: 11/30/2017

DESIGNER/DRAFTER: MGB/EMK
CHECKED BY: LLF

STATE OF CONNECTICUT
DEPARTMENT OF TRANSPORTATION

Filename: ...\CTDOT_Highway_GD (11-21-17).dgn

SIGNATURE/BLOCK:
OFFICE OF ENGINEERING
APPROVED BY:

PROJECT TITLE:

TOWN:

DRAWING TITLE:
SIDEWALK RAMP
SHEET 2

PROJECT NO.
DRAWING NO.
SHEET NO.

FOR PERMITTING PURPOSES ONLY
NOT RELEASED FOR CONSTRUCTION

© 2020 BL COMPANIES, INC. THESE DRAWINGS SHALL NOT BE UTILIZED BY ANY PERSON, FIRM OR CORPORATION WITHOUT THE SPECIFIC WRITTEN PERMISSION OF BL COMPANIES.

10/29/2020, KOLGUIS, G:\JOBS13\13C\13C4718\DWG\DN\13C4718D.DWG DN-15 24X36 ISTS.

Architecture
Engineering
Environmental
Land Surveying
BL Companies
100 Constitution Plaza, 10th Floor
Hartford, CT 06103
(860) 249-2200
(860) 249-2400 Fax

STATE OF CONNECTICUT
MICHELLE M. CARLSON
No.20951
LICENSED PROFESSIONAL ENGINEER

PROPOSED DEVELOPMENT
EVERGREEN WALK - UNIT 12
151 BUCKLAND ROAD
SOUTH WINDSOR, CONNECTICUT

REVISIONS

No.	Date	Desc.
1	01/06/2020	DRAINAGE MODIFICATION
2	09/14/2020	PLANNING & ZONING SUBMISSION
3	10/20/2020	RESPONSE TO COMMENTS

Designed	J.A.B.
Drawn	S.E.L.
Reviewed	
Scale	N.T.S.
Project No.	13C4718
Date	09/18/2019
CAD File:	DN13C471801

Title
SITE DETAILS

Sheet No.
DN-15

Xref file: ...\B13C4718D1

TOWN OF SOUTH WINDSOR
STANDARD DETAIL
MARCH, 2005

REVISED:

TYPICAL ROADWAY SECTION LOCAL ROADS

APPROVED
PUBLIC WORKS DIRECTOR

ALL MATERIALS ARE TO MEET CONN. D.O.T. SPECIFICATIONS FORM 816 AS AMENDED

ALL UNDERGROUND UTILITIES INCLUDING SERVICE LATERALS, SHALL BE INSTALLED PRIOR TO PLACEMENT OF BINDER COURSE

MAINTAIN 18" VERTICAL OR 10' HORIZONTAL SEPARATION DISTANCE BETWEEN SANITARY SEWER AND WATER MAIN

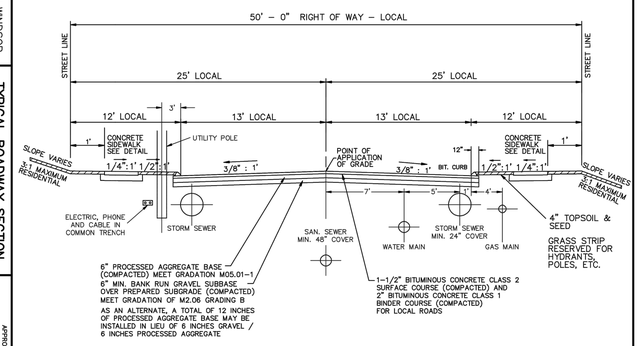

ACTUAL DEPTHS & MATERIALS SHOULD BE BASED ON A PAVEMENT DESIGN FOR EACH ROAD.

DESIGN TO BE SUBMITTED TO AND APPROVED BY TOWN ENGINEER.

NOT TO SCALE

SD–3

T-ROAD-SECT.DWG

TOWN OF SOUTH WINDSOR
STANDARD DETAIL
MARCH, 2005

REVISED:

CONCRETE SIDEWALK RAMP TYPE 1

APPROVED
PUBLIC WORKS DIRECTOR

GENERAL NOTES

1. SIDEWALK CURB RAMPS SHALL BE CONSTRUCTED AT ALL PEDESTRIAN CROSSWALKS IN ALL NEW DESIGNS AND AT PEDESTRIAN CROSSWALK LOCATIONS WHERE AN EXISTING CURB OR WALK IS TO BE DISTURBED BY CONSTRUCTION.
2. NO DRAINAGE STRUCTURES SHALL BE PLACED WITHIN THE LIMITS OF A PROPOSED OR EXISTING SIDEWALK CURB RAMP. CATCH BASIN TO BE PLACED UPGRADIENT OF RAMP.
3. REGARDLESS OF THE TYPE OF PAVEMENT OF ADJACENT SIDEWALK, ALL SIDEWALK CURB RAMPS SHALL BE CONSTRUCTED OF PORTLAND CEMENT CONCRETE.
4. ALL SIDEWALK CURB RAMPS SHALL BE CONSTRUCTED IN ACCORDANCE WITH THE DETAILS FOR 5" CONCRETE SIDEWALK, EXCEPT THAT THE FINAL TEXTURE OF THE CONCRETE SURFACE SHALL BE A COARSE BROOM FINISH TRANSVERSE TO THE SLOPE OF THE RAMP.
5. CARE SHALL BE TAKEN TO ASSURE UNIFORM GRADE ON THE RAMP, FREE OF SAGS AND ABRUPT GRADE CHANGES.
6. THE BOTTOM OF THE RAMP SHALL BE FLUSH WITH THE GUTTER LINE AND BEVELED.
7. SAID SPECIFICATIONS SHALL BE INTERPRETED TO COMPLY WITH THE APPLICABLE STATUTES OF THE STATE OF CONN. AND THE FEDERAL REQUIREMENTS CONCERNING THE CONSTRUCTION OF SIDEWALK CURB RAMPS.
8. SIDEWALK CURB RAMP DETAILS ALSO APPLY FOR SIDEWALK SECTIONS ON A CURVE.
9. MAXIMUM SLOPES OF ADJOINING GUTTERS AND ROAD SURFACES IMMEDIATELY ADJACENT TO THE SIDEWALK CURB RAMP OR ACCESSIBLE ROUTE SHALL NOT EXCEED 20:1.
10. SEE PAGES 8–11 FOR DETAILS OF SIDEWALKS AND CURBS.
11. REMOVAL OF EXISTING SIDEWALK FOR NEW CURB RAMP INSTALLATION SHALL BE TO THE NEAREST EXPANSION/CONTRACTION JOINT, UNLESS OTHERWISE DIRECTED BY THE ENGINEER.
12. RAISED ISLANDS IN CROSSINGS SHALL HAVE SIDEWALK CURB RAMPS AT BOTH SIDES AND A LEVEL AREA AT LEAST 4' LONG BETWEEN THE CURB RAMPS IN THE PART OF THE ISLAND INTERSECTED BY THE CROSSINGS. IF THIS CAN NOT BE ACHIEVED, THE RAISED ISLAND SHALL BE CUT THROUGH LEVEL WITH THE ROADWAY.

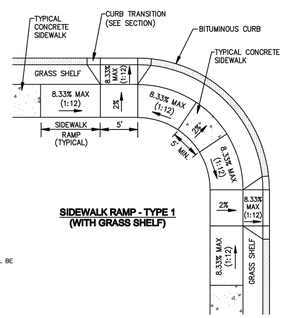

SIDEWALK RAMP - TYPE 1 (WITH GRASS SHELF)

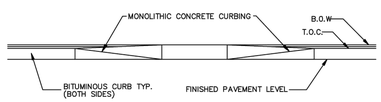

SECTION

NOT TO SCALE

SD–13

HANDICAP.DWG

TOWN OF SOUTH WINDSOR
STANDARD DETAIL
MARCH, 2005

REVISED:

CONCRETE SIDEWALK RAMP TYPE 2

APPROVED
PUBLIC WORKS DIRECTOR

GENERAL NOTES

1. SIDEWALK CURB RAMPS SHALL BE CONSTRUCTED AT ALL PEDESTRIAN CROSSWALKS IN ALL NEW DESIGNS AND AT PEDESTRIAN CROSSWALK LOCATIONS WHERE AN EXISTING CURB OR WALK IS TO BE DISTURBED BY CONSTRUCTION.
2. NO DRAINAGE STRUCTURES SHALL BE PLACED WITHIN THE LIMITS OF A PROPOSED OR EXISTING SIDEWALK CURB RAMP. CATCH BASIN TO BE PLACED UPGRADIENT OF RAMP.
3. REGARDLESS OF THE TYPE OF PAVEMENT OF ADJACENT SIDEWALK, ALL SIDEWALK CURB RAMPS SHALL BE CONSTRUCTED OF PORTLAND CEMENT CONCRETE.
4. ALL SIDEWALK CURB RAMPS SHALL BE CONSTRUCTED IN ACCORDANCE WITH THE DETAILS FOR 5" CONCRETE SIDEWALK, EXCEPT THAT THE FINAL TEXTURE OF THE CONCRETE SURFACE SHALL BE A COARSE BROOM FINISH TRANSVERSE TO THE SLOPE OF THE RAMP.
5. CARE SHALL BE TAKEN TO ASSURE UNIFORM GRADE ON THE RAMP, FREE OF SAGS AND ABRUPT GRADE CHANGES.
6. THE BOTTOM OF THE RAMP SHALL BE FLUSH WITH THE GUTTER LINE AND BEVELED.
7. SAID SPECIFICATIONS SHALL BE INTERPRETED TO COMPLY WITH THE APPLICABLE STATUTES OF THE STATE OF CONN. AND THE FEDERAL REQUIREMENTS CONCERNING THE CONSTRUCTION OF SIDEWALK CURB RAMPS.
8. SIDEWALK CURB RAMP DETAILS ALSO APPLY FOR SIDEWALK SECTIONS ON A CURVE.
9. MAXIMUM SLOPES OF ADJOINING GUTTERS AND ROAD SURFACES IMMEDIATELY ADJACENT TO THE SIDEWALK CURB RAMP OR ACCESSIBLE ROUTE SHALL NOT EXCEED 20:1.
10. SEE PAGES 8–11 FOR DETAILS OF SIDEWALKS AND CURBS.
11. REMOVAL OF EXISTING SIDEWALK FOR NEW CURB RAMP INSTALLATION SHALL BE TO THE NEAREST EXPANSION/CONTRACTION JOINT, UNLESS OTHERWISE DIRECTED BY THE ENGINEER.
12. RAISED ISLANDS IN CROSSINGS SHALL HAVE SIDEWALK CURB RAMPS AT BOTH SIDES AND A LEVEL AREA AT LEAST 4' LONG BETWEEN THE CURB RAMPS IN THE PART OF THE ISLAND INTERSECTED BY THE CROSSINGS. IF THIS CAN NOT BE ACHIEVED, THE RAISED ISLAND SHALL BE CUT THROUGH LEVEL WITH THE ROADWAY.

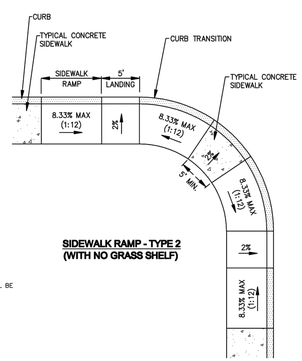

SIDEWALK RAMP - TYPE 2 (WITH NO GRASS SHELF)

NOT TO SCALE

SD–14

HANDICAP.DWG

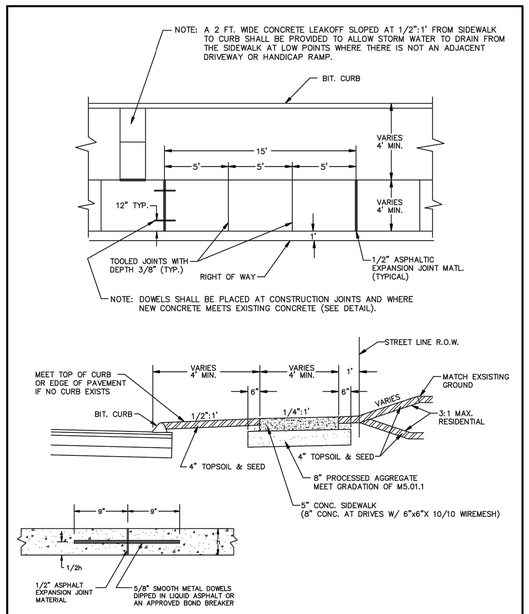

EXPANSION JOINT – DETAIL

NOT TO SCALE

TOWN OF SOUTH WINDSOR STANDARD DETAIL MARCH, 2005	TYPICAL SIDEWALK DETAIL	APPROVED
	REVISED:	PUBLIC WORKS DIRECTOR

SD–11

SIDEWALK.DWG

TOWN OF SOUTH WINDSOR
STANDARD DETAIL
MARCH, 2005

REVISED:

IMPROVEMENT TO EXISTING TOWN ROADS

APPROVED
PUBLIC WORKS DIRECTOR

ALL MATERIALS ARE TO MEET CONN. D.O.T. SPECIFICATIONS FORM 816 AS AMENDED

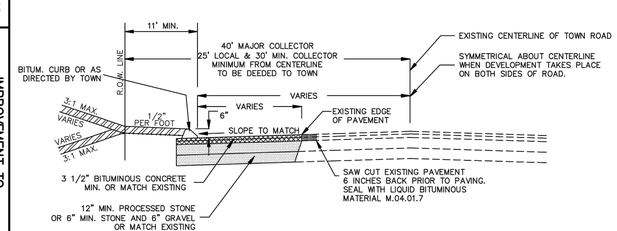

NOT TO SCALE

ALL DEPTH MEASUREMENTS REFER TO DEPTH AFTER COMPACTION.

SD–15

ROAD-IMPROVE.DWG

FOR PERMITTING PURPOSES ONLY
NOT RELEASED FOR CONSTRUCTION

Architecture
Engineering
Environmental
Land Surveying

BL Companies

100 Constitution Plaza, 10th Floor
Hartford, CT 06103
(860) 249-2200
(860) 249-2400 Fax

STATE OF CONNECTICUT
MICHELLE M. CARSON
No.20951
LICENSED PROFESSIONAL ENGINEER

PROPOSED DEVELOPMENT

EVERGREEN WALK - UNIT 12
151 BUCKLAND ROAD
SOUTH WINDSOR, CONNECTICUT

REVISIONS

No.	Date	Desc.
1	01/06/2020	DRAINAGE MODIFICATION
2	09/14/2020	PLANNING/ZONING SUBMISSION
3	10/20/2020	RESPONSE TO COMMENTS

Designed	J.A.B.
Drawn	S.E.L.
Reviewed	
Scale	N.T.S.
Project No.	13C4718
Date	09/18/2019

CAD File: DN13C471801

Title

SITE DETAILS

Sheet No.

DN–16

Xref (s): - BD13C471801

© 2020 BL COMPANIES, INC. THESE DRAWINGS SHALL NOT BE UTILIZED BY ANY PERSON, FIRM OR CORPORATION WITHOUT THE SPECIFIC WRITTEN PERMISSION OF BL COMPANIES.

10/20/2020, KKIGUES, G:\JOBS13\13C\13C4718\DWG\DN13C471801.DWG,DN14-24X36.NTS,

PRELIMINARY DRAFT RETAINING WALL PLANS FOR COSTCO WHOLESALE, SOUTH WINDSOR, CONNECTICUT

(KOWALSKI PROJECT NO. 18064)

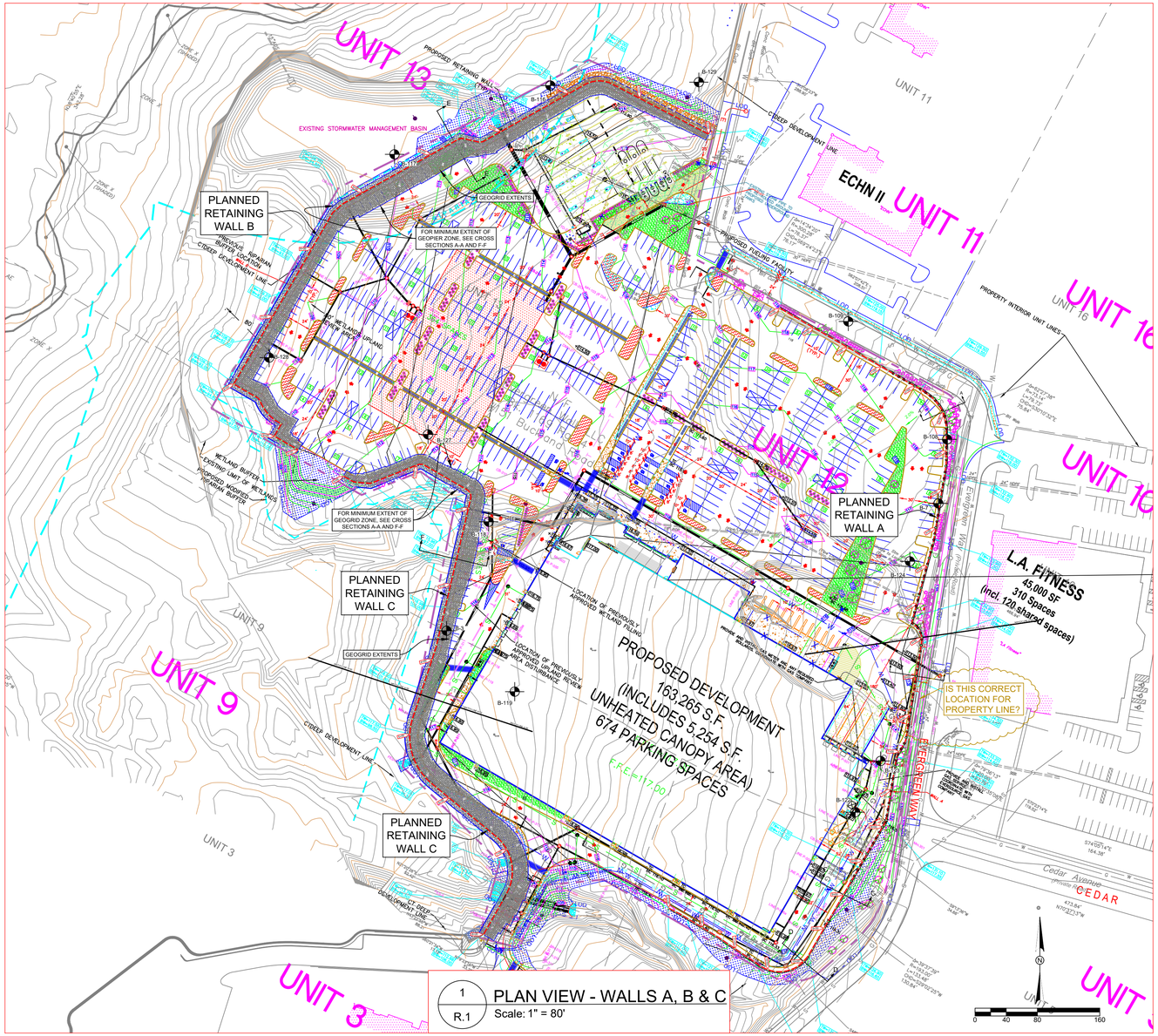

1 R.1 PLAN VIEW - WALLS A, B & C
Scale: 1" = 80'

GENERAL NOTES

1. PROPER SURFACE DRAINAGE BEHIND AND IN FRONT OF THE RETAINING WALLS IS OF PARAMOUNT IMPORTANCE TO THE PERFORMANCE OF RETAINING WALLS BOTH DURING AND AFTER CONSTRUCTION. THIS RETAINING WALL DESIGN IS BASED ON PLANNED GRADING AND WALL LOCATIONS PROVIDED TO US AND ASSUMES OVERALL SITE DRAINAGE, HAS BEEN ADDRESSED BY THE PROJECT CIVIL ENGINEER. POOR PERFORMANCE AND FAILURE OF RETAINING WALLS DURING AND AFTER CONSTRUCTION CAN OCCUR IF UNANTICIPATED STORM-WATER IMPACTS THE WALLS. THEREFORE, IT IS CRITICAL THAT ANY POTENTIAL DRAINAGE ISSUES THAT BECOME APPARENT DURING OR AFTER CONSTRUCTION BE ADDRESSED IMMEDIATELY TO AVOID RETAINING WALL PERFORMANCE PROBLEMS.

2. TESTING AND INSPECTION, AS REQUIRED TO ENSURE WALLS ARE CONSTRUCTED PER THESE PLANS, SHALL BE PERFORMED BY THE OWNER'S MATERIALS TESTING AND INSPECTION FIRM. FAILURE TO PERFORM THE TESTING AND INSPECTION AS STATED HEREIN WILL RELEASE KOWALSKI FROM ITS LIABILITY FOR THIS DESIGN. IF TESTING AND INSPECTING PER THESE PLANS AND SPECIFICATIONS ARE BEYOND THE SCOPE OF SERVICES FOR THE OWNER'S MATERIALS TESTING AND INSPECTION FIRM, KOWALSKI SHALL BE NOTIFIED TO PERFORM THESE SERVICES (AT ADDITIONAL COST).

3. IN PREPARATION OF THIS WALL DESIGN, SOIL STRENGTH PARAMETERS WERE BASED ON THE GEOTECHNICAL STUDY PERFORMED BY TERRACON CONSULTANTS. INC., PROJECT NO. J2185149 , DATED 05/29/2019 AND PUBLISHED LITERATURE. IT IS THE RESPONSIBILITY OF THE OWNER OR OWNER'S REPRESENTATIVE TO VERIFY THE ASSUMED SOIL STRENGTH PARAMETERS ARE REPRESENTATIVE OF THE SOILS AVAILABLE PRIOR TO COMMENCING WALL CONSTRUCTION. IF THE SOIL STRENGTH PARAMETERS ARE FOUND TO BE INCONSISTENT WITH THOSE ASSUMED BY KOWALSKI, THIS DESIGN IS NO LONGER VALID AND IT IS THE RESPONSIBILITY OF THE OWNER OR OWNER'S REPRESENTATIVE TO NOTIFY KOWALSKI IMMEDIATELY SO THE RETAINING WALL SYSTEMS CAN BE REDESIGNED. FAILURE TO NOTIFY KOWALSKI IN A TIMELY FASHION MAY RESULT IN FAILURE OF THE RETAINING WALLS.

4. ASSUMED DESIGN SOIL PARAMETERS (ALLAN BLOCK WALLS, WALL 1 & 3):
   - REINFORCED SOIL: CLEAN SAND WITH LESS THAN 12 PERCENT PASSING NO. 200 SIEVE, PHI = 32 DEGREES, GAMMA = 123 PCF.
   - DRAINAGE STONE: CLEAN, ANGULAR CRUSHED STONE, NO. 57 GRADATION, PHI = 36 DEGREES, GAMMA = 100 PCF.
   - RETAINED SOIL: STIFF UNDISTURBED SOIL OR NEW COMPACTED AND TESTED LEAN CLAY FILL, COHESION = 50 PSF, PHI = 24 DEGREES, GAMMA = 125 PCF.
   - FOUNDATION SOIL:
     - WALLS B & C: GEOPIER FOUNDATION, MINIMUM REQUIRED STRENGTH, COHESION = 0 PSF, PHI = 32 DEGREES, GAMMA = 120 PCF.
     - WALL A (0+00 TO 1+68): ON SITE CLAYEY SAND, COHESION = 0 PSF, PHI = 28 DEGREES, GAMMA = 120 PCF.
     - WALL A (8+00 TO 12+00): WEATHERED ARKOSE ROCK, COHESION = 500 PSF, PHI = 40 DEGREES, GAMMA = 130 PCF.

   MINIMUM REQUIRED NET ALLOWABLE FOUNDATION SOIL BEARING CAPACITY = 4,000 PSF.

5. ANY EXCAVATION BELOW THE WALLS MUST BE REVIEWED BY A LICENSED ENGINEER TO PREVENT EXCAVATION FROM UNDERMINING THE WALLS.

6. WALL STATIONING SHOWN IS RELATIVE TO EACH INDIVIDUAL WALL, NOT TO ANY OTHER STATIONING SHOWN ON THE GRADING PLANS. STATION 0+00 IS ON THE LEFT END OF THE WALL AS SEEN FROM IN FRONT OF THE WALL.

7. THIS SET OF SEGMENTAL RETAINING WALL PLANS IS BASED ON THE GRADING PLANS PREPARED BY BL COMPANIES, PROJECT NO. 13C4718, PROVIDED TO KOWALSKI IN .DWG FORMAT ("ACAD-XC13C471801.DWG") ON 08/27/2020. IF GRADING PLAN CHANGES, THIS PLAN MAY NEED TO BE REVISED AND/OR THE WALLS REDESIGNED.

8. THIS SET OF SEGMENTAL RETAINING WALL PLANS IS BASED SPECIFICALLY ON THE WALLS BEING CONSTRUCTED WITH ALLAN BLOCK AND MIRAFI REINFORCEMENT PRODUCTS, MODULAR RECON BLOCK WALL WITHOUT ANY REINFORCEMENT PRODUCTS AND HP 14x73 BEAM WITH AND WITHOUT TIEBACKS. ABSOLUTELY NO SUBSTITUTIONS ARE ALLOWED.

9. LOCATIONS OF THE SEGMENTAL RETAINING WALLS IN RELATION TO PROPERTY LINES, UTILITY EASEMENTS, WATERSHED EASEMENTS, OR ANY OTHER TYPE OF EASEMENTS ARE THE RESPONSIBILITY OF THE OWNER OR THE SITE CIVIL ENGINEER. KOWALSKI ASSUMES NO LIABILITY FOR THE LOCATIONS OF THE SEGMENTAL RETAINING WALLS, OR IF CONSTRUCTION OF THE PROPOSED SEGMENTAL RETAINING WALLS ENCROACHES ANY PROPERTY LINES OR EASEMENTS.

10. THE RETAINING WALL CONTRACTOR IS RESPONSIBLE FOR WALL CONSTRUCTION STAKING INCLUDING LOCATION AND ELEVATION.

11. LANDSCAPING NOTE: GEOGRID PENETRATIONS DUE TO LANDSCAPING AND FENCING SHALL BE AVOIDED. WHERE LIMITED PLANTINGS CANNOT BE INSTALLED TO AVOID THE GEOGRID, THE GRID MUST BE EXPOSED AND CAREFULLY HAND CUT SUCH THAT THE GRID IS NOT PULLED OR OTHERWISE DAMAGED. MAXIMUM CUTS FOR PLANTING SHALL BE 18 INCHES IN DIAMETER.

12. RED LINE IS TOP OF WALL.

GENERAL NOTES: PIER WALLS (WALL A, STA 1+68 TO 8+00)

1. THE PIER WALL IS TO BE A SOLDIER PILE WALL WITH TEMPORARY NON-PRESSURE TREATED WOOD LAGGING (FOR TOP-DOWN CONSTRUCTION, TEMPORARY SHORING) AND REINFORCED CONCRETE LAGGING PANELS IN FRONT OF WOOD LAGGING. DRILLED SHAFTS WALL SHALL HAVE THE ILLUSTRATED SOCKETS INTO ROCK. THE CONCRETE SURROUNDING THE BEAMS IS TO HAVE A MINIMUM COMPRESSIVE 28-DAY STRENGTH OF 4000-PSI UP TO THE BOTTOM OF LAGGING. USE CONTROLLED LOW-STRENGTH MORTAR (CLSM) TO SURROUND THE BEAM FROM THE BOTTOM-OF-LAGGING TO THE GROUND SURFACE. REMOVE THE CLSM FROM BETWEEN THE FLANGES DURING CONSTRUCTION TO INSTALL THE WOOD LAGGING. PIERS ARE TO BE SPACED 8 FEET CENTER-TO-CENTER.

2. ALL PIERS ARE TO BE DRILLED STRAIGHT AND PLUMB. THEY ARE TO BE INSTALLED WITHIN 2 INCHES OF THE SPECIFIED LOCATION. THE DRILLED PIERS ARE TO HAVE A DIAMETER OF 2.5 FEET (30 INCHES). THE PIERS ARE TO BE EMBEDDED INTO WEATHERED ARKOSE ROCK. THE BOTTOMS OF THE SHAFT EXCAVATIONS SHALL BE FREE OF ALL LOOSE MATERIAL PRIOR TO PLACING CONCRETE. THE BOTTOMS OF THE SHAFTS ARE TO BE LEVEL. CONCRETE IS NOT TO BE PLACED THROUGH MORE THAN 3 INCHES OF WATER IN THE BOTTOM OF ANY SHAFT, AND ONLY WITH THE APPROVAL OF JOSEPH W. KOWALSKI, P.E.

3. CONCRETE FOR THE DRILLED PIERS IS TO BE f'c= 4000 PSI MINIMUM AT 28 DAYS, CONTAIN 1.5-INCH MAXIMUM SIZE AGGREGATE, 4- TO 6-PERCENT ENTRAINED AIR, AND SHALL BE PLACED AT 4" MAXIMUM SLUMP UP TO THE BOTTOM-OF-LAGGING.

4. CONCRETE FOR THE REINFORCED CONCRETE LAGGING PANELS IS TO BE 4000 PSI MINIMUM AT 28 DAYS, CONTAIN 1.5-INCH MAXIMUM SIZE AGGREGATE, 4- TO 6-PERCENT ENTRAINED AIR, AND SHALL BE PLACED AT 4" MAXIMUM SLUMP.

5. ALL STEEL BEAMS (HP 14X73) SHALL COMPLY WITH ASTM A572-60 GRADE. STEEL SHALL HAVE A MINIMUM YIELD OF 60,000 PSI.

6. ALL DRILLED SHAFTS ARE TO BE REVIEWED BY A REPRESENTATIVE OF THE OFFICE OF KOWALSKI PRIOR TO THE PLACEMENT OF STEEL AND CONCRETE. THESE SERVICES SHALL BE THE RESPONSIBILITY OF THE OWNER, AND SHALL BE COORDINATED BY THE CONTRACTOR.

7. CONTRACTOR SHALL BE PREPARED TO CASE DRILLED SHAFTS IF RECOMMENDED BY KOWALSKI DUE TO SEEPAGE, FALL-IN, AND/OR SOFT SOILS.

8. WE HAVE DESIGNED THE DRILLED SHAFTS FOR THE ANTICIPATED LATERAL LOADS AND ASSUME NO RESPONSIBILITY FOR: (i) LOCATIONS OF AND PROTECTION OF EXISTING UTILITIES, SEWERS, STRUCTURES, ETC.; (ii) COORDINATION AND VERIFICATION OF DIMENSIONS AND DETAILS OF EXISTING ON-SITE CONDITIONS; (iii) THE STAKING OF THE CENTER OF EACH DRILLED SHAFT IN THE FIELD; AND, (iv) CONDITIONS OF THE JOB SITE INCLUDING SAFETY OF PERSONS AND PROPERTY DURING CONSTRUCTION.

9. ALTERNATE TIEBACK ANCHORS (OR ANCHOR TYPES) MAY BE CONSIDERED FOR POSSIBLE USE UPON SUBMISSION OF SHOP DRAWINGS & TECHNICAL INFORMATION.

SHEET INDEX

WALL		LENGTH	MAX. HEIGHT	FACE AREA (W/O CAP)	CAP AREA
WALL A	RECON WALL	568	16'	5,984 SF	-
	PIER WALL	632	30'	10,545 SF (80 PIERS)	
WALL B		935	26'	16,760 SF	312 SF
WALL C		820	24.67'	15,095 SF	274 SF
TOTAL OF RECON BLOCK WALL				5,984 SF	
TOTAL OF ALLAN BLOCK WALL WITH CAP				32,441 SF	
TOTAL NUMBER OF PIERS				80 PIERS	

SHEET INDEX

SHEET	DESCRIPTION
R.1	PLAN VIEW, GENERAL NOTES AND QUANTITIES
R.2	WALL A - PLAN VIEW
R.3	WALL A - PROFILE VIEW (0+00 TO 5+20)
R.4	WALL A - PROFILE VIEW (5+20 TO 10+40)
R.5	WALL A - PROFILE VIEW, PIER SCHEDULE, CROSS SECTION B-B, CONCRETE LAGGING DETAILS AND TIEBACK DETAILS
R.6	WALL A - CROSS SECTIONS A-A, B-B, C-C AND D-D
R.7	WALL B - PLAN VIEW
R.8	WALL B - PROFILE VIEW (0+00 TO 7+80)
R.9	WALL B - PROFILE VIEW (7+80 TO 9+35) AND CROSS SECTION E-E
R.10	WALL C - PLAN VIEW
R.11	WALL C - PROFILE VIEW (0+00 TO 7+80)
R.12	WALL C - PROFILE VIEW (7+80 TO 8+20) AND CROSS SECTION F-F
R.13	MSE RETAINING WALL SPECIFICATIONS
R.14	RECON BLOCK WALL SPECIFICATIONS
R.15	TIEBACK SPECIFICATIONS

ITEMS REQUIRED ATTENTION:

- GRADE BEAM.
- CONFIRM GEOPIER STRENGTH AND LOCATION.
- WATER BASIN AT WALL B.
  - 100 YR. FLOOD ELEVATION
  - DRY OR WET BASIN?
- WATER BASIN AT WALL C.
  - 100 YR. FLOOD ELEVATION
  - DRY OR WET BASIN?
- CONFIRM SOIL STRENGTH PARAMETERS.
- RECON BLOCKS COUNT.
- MOVE PIPE AT STA 5+85 @WALL A.
- GEOGRIDS AT PIPES @ WALL C.
- LOWET OUTLET @ STA 7+75, WALL C.
- WHAT IS AT STA 7+85 @ WALL C.
- WALER SIZE.

REV	DATE	DESCRIPTION

PRELIMINARY NOT FOR CONSTRUCTION

SIGNATURE DATE:

JOSEPH W. KOWALSKI, P.E.
3710 Section Road
Cincinnati, Ohio 45236
Phone 513.403.5657
www.RetainingWallExpert.com

© COPYRIGHT, 2019, JOSEPH W. KOWALSKI. ALL RIGHTS RESERVED.

TITLE: PLAN VIEW AND GENERAL NOTES

FOR: Costco Wholesale

SCALE: As Noted

PROJECT: Costco– South Windsor

SHEET: 18064-R.1

LOCATION: South Windsor, Connecticut

CAD FILE: G:\Google Drive\KOWALSKI\2018\18064-Costco-SWindsorCT\Wall Designs\Costco-SWindsorCT-092520.dwg LAYOUT: R1 PLOTTED: 9/25/2020 4:14 PM BY: joe

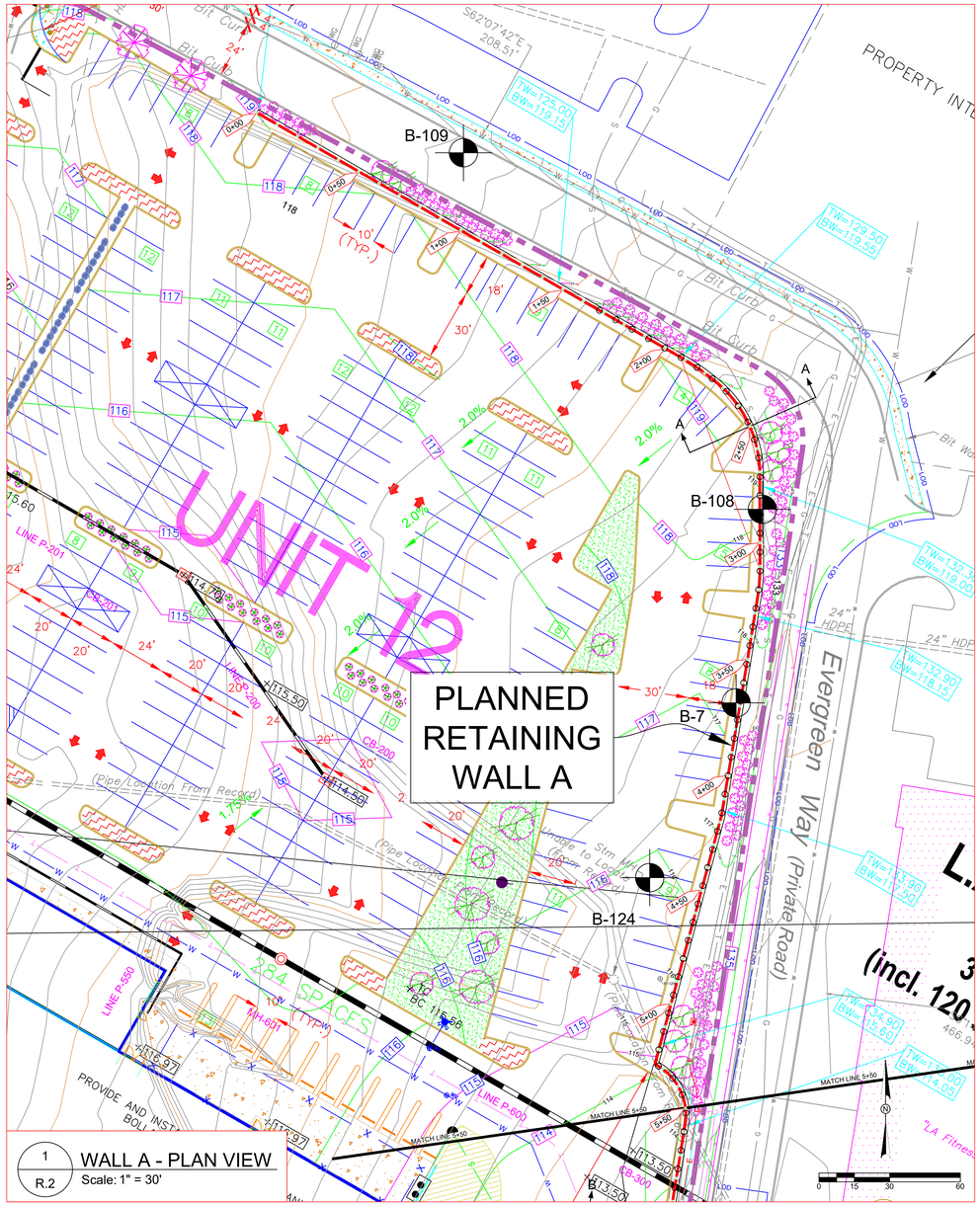

1 R.2 WALL A - PLAN VIEW
Scale: 1" = 30'

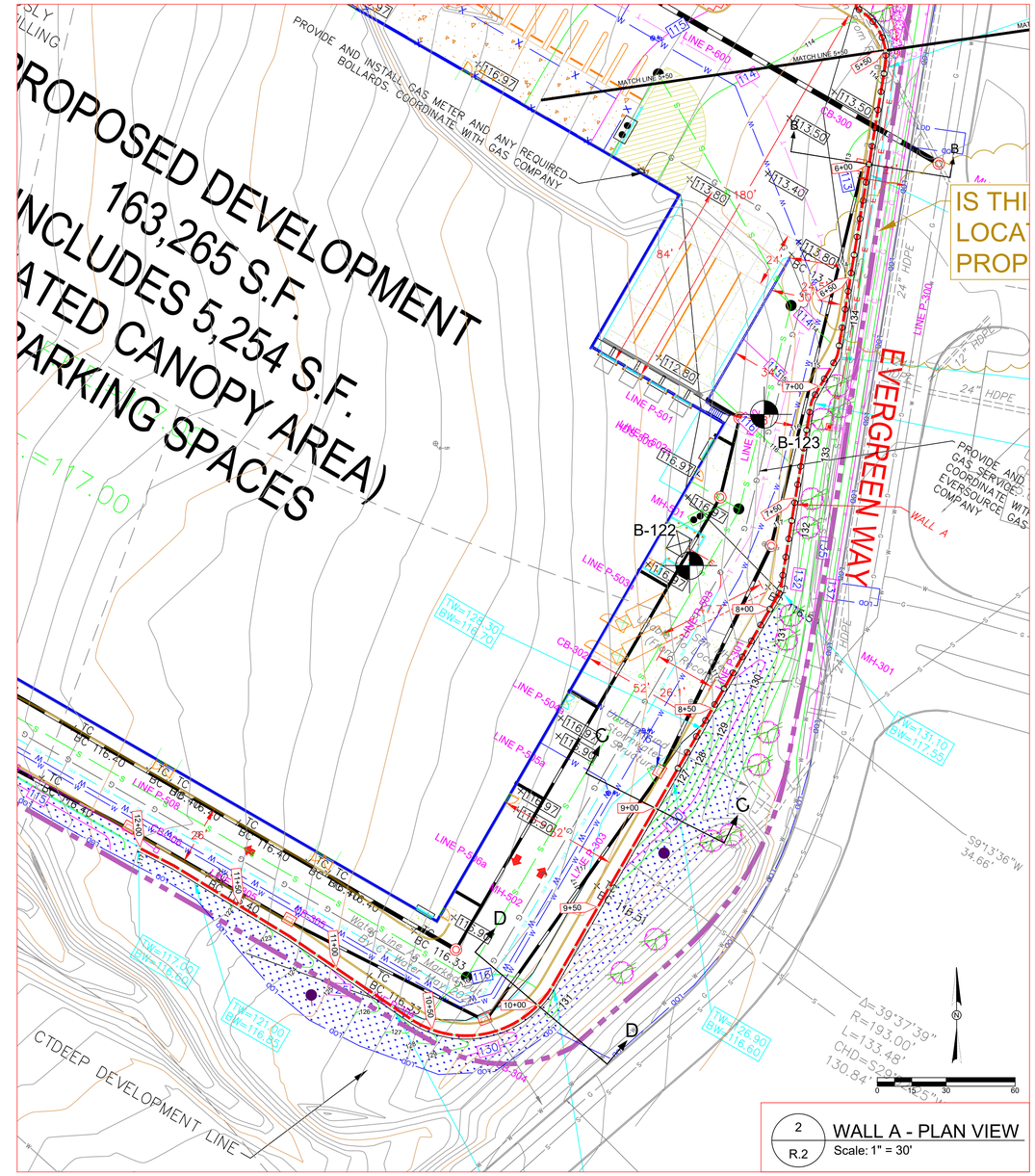

2 R.2 WALL A - PLAN VIEW
Scale: 1" = 30'

REV	DATE	DESCRIPTION

PRELIMINARY
NOT FOR
CONSTRUCTION

SIGNATURE DATE:

JOSEPH W. KOWALSKI, P.E.
3710 Section Road
Cincinnati, Ohio 45236
Phone 513.403.5657
www.RetainingWallExpert.com

© COPYRIGHT, 2019, JOSEPH W. KOWALSKI. ALL RIGHTS RESERVED.

TITLE: WALL A –PLAN VIEW

FOR: Costco Wholesale

PROJECT: Costco– South Windsor

LOCATION: South Windsor, Connecticut

SCALE: As Noted

SHEET: 18064-R.2

CAD FILE: D:\Google Drive\KEFILES\2018\18064-Costco-SWindsor\CTWell Designs\Costco-SWindsorCT-092320.dwg LAYOUT: R2 PLOTTED: 9/25/2020 4:15 PM BY: joe

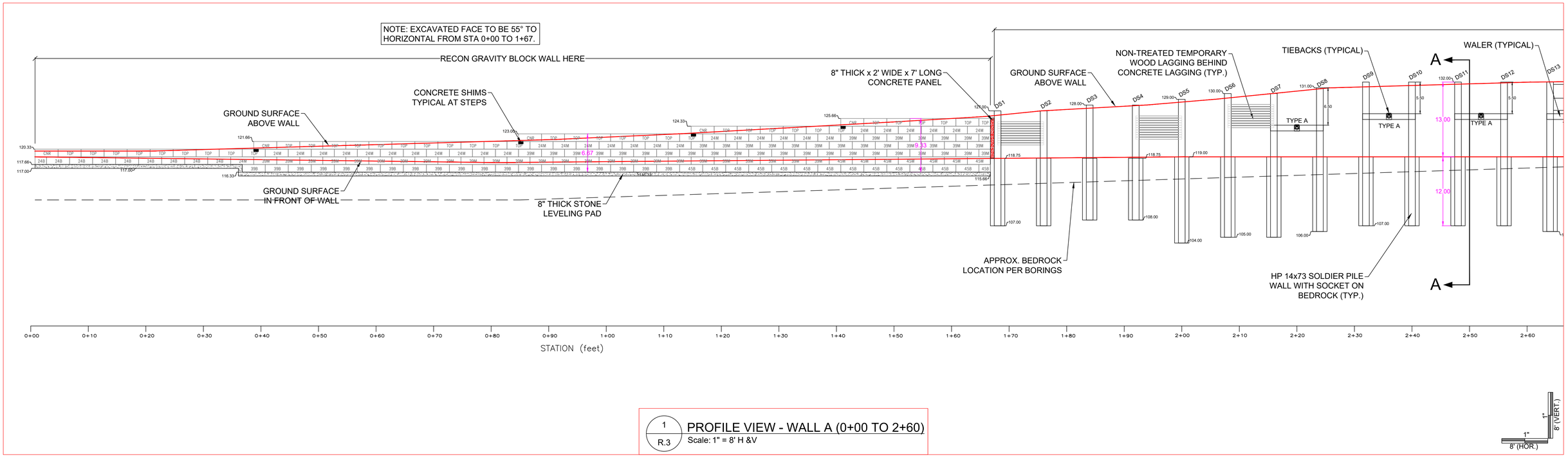

1 / R.3 PROFILE VIEW - WALL A (0+00 TO 2+60)
Scale: 1" = 8' H &V

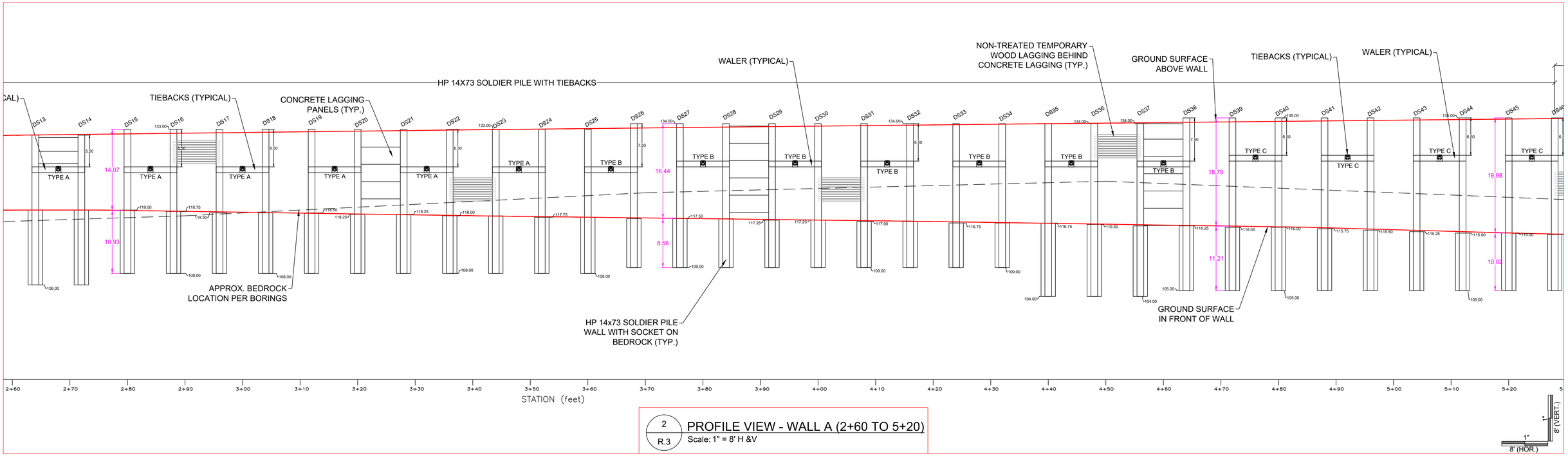

2 / R.3 PROFILE VIEW - WALL A (2+60 TO 5+20)
Scale: 1" = 8' H &V

REV	DATE	DESCRIPTION

PRELIMINARY NOT FOR CONSTRUCTION

SIGNATURE DATE:

JOSEPH W. KOWALSKI, P.E.
3710 Section Road
Cincinnati, Ohio 45236
Phone 513.403.5657
www.RetainingWallExpert.com

© COPYRIGHT, 2019, JOSEPH W. KOWALSKI. ALL RIGHTS RESERVED.

TITLE: WALL A – PROFILE VIEW (0+00 TO 7+80)

FOR: Costco Wholesale

PROJECT: Costco– South Windsor

LOCATION: South Windsor, Connecticut

SCALE: As Noted

SHEET: 18064-R.3

CAD FILE: D:\Google Drive\KFFILES\2018\18064-Costco-SWindsor\Wall Designs\Costco-SWindsorCT-092520.dwg LAYOUT: R3 PLOTTED: 9/25/2020 4:15 PM BY: joe

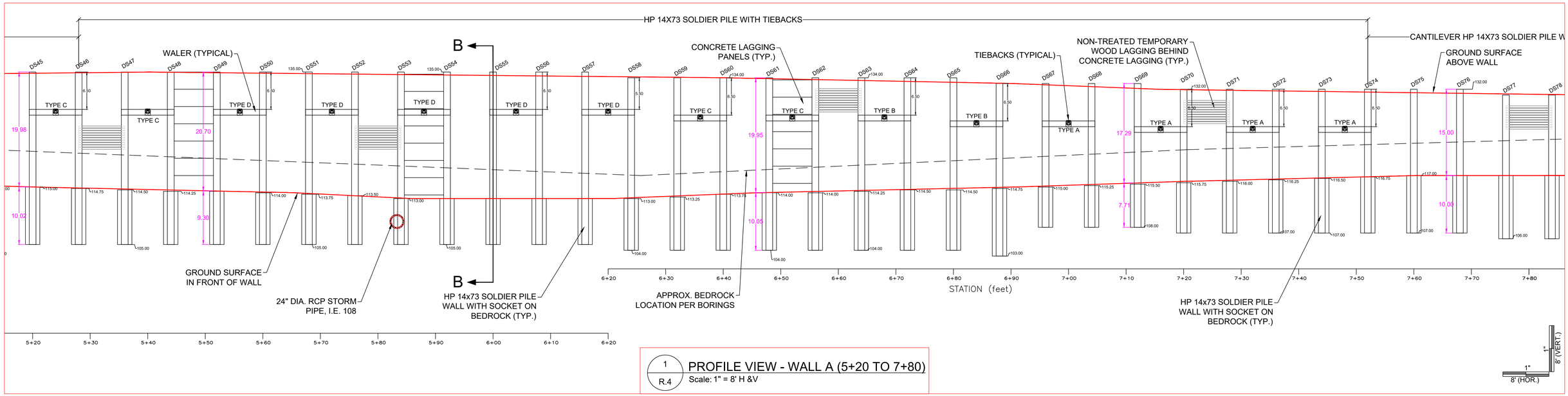

1 / R.4 PROFILE VIEW - WALL A (5+20 TO 7+80)
Scale: 1" = 8' H &V

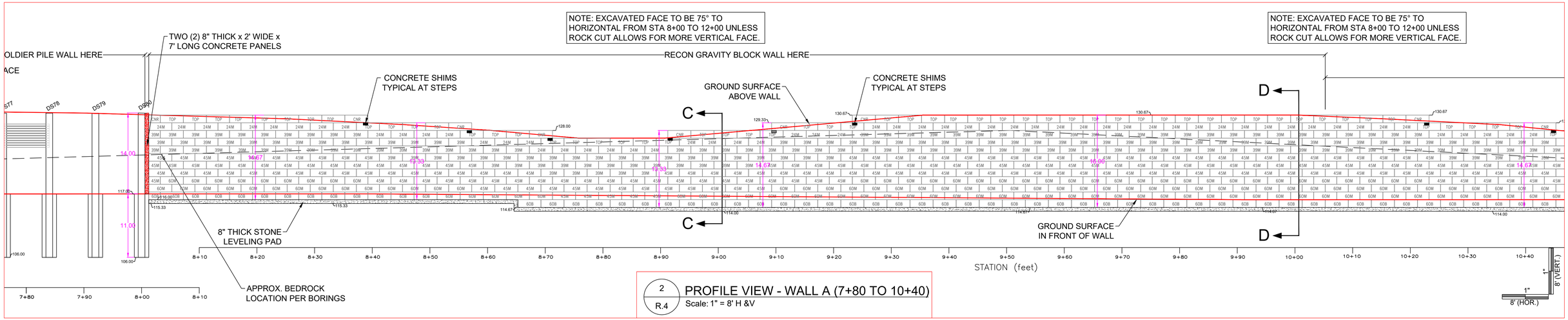

2 / R.4 PROFILE VIEW - WALL A (7+80 TO 10+40)
Scale: 1" = 8' H &V

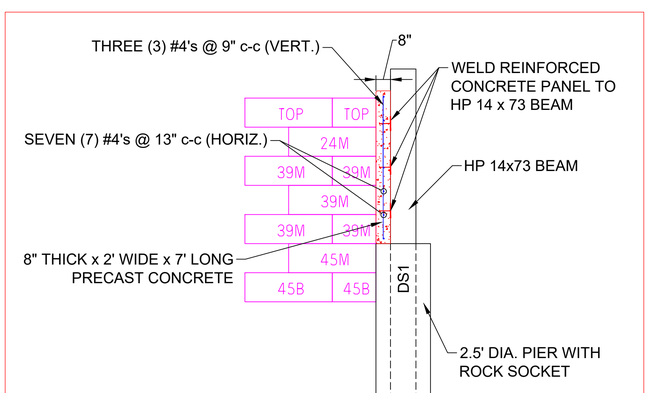

3 / R.4 CONCRETE PANEL DETAILS (STA 1+68)
Scale: NTS

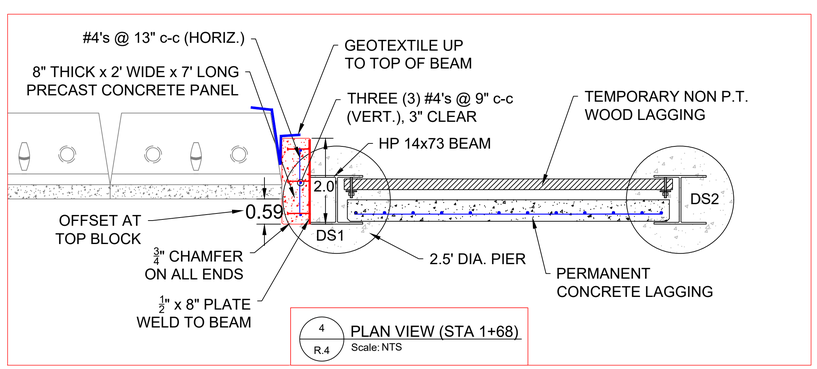

4 / R.4 PLAN VIEW (STA 1+68)
Scale: NTS

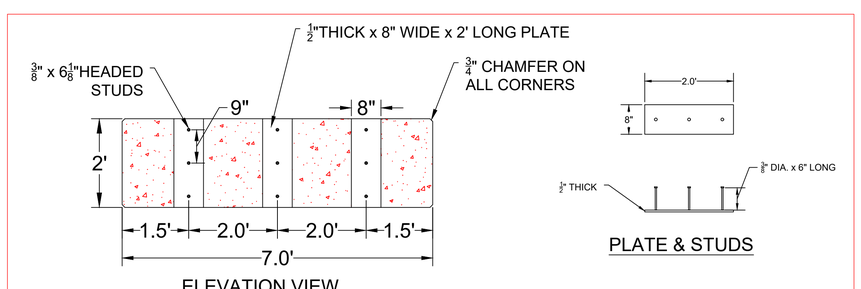

5 / R.4 PLATE AND STUDS DETAILS
Scale: NTS

REV	DATE	DESCRIPTION

PRELIMINARY NOT FOR CONSTRUCTION

SIGNATURE DATE:

JOSEPH W. KOWALSKI, P.E.
3710 Section Road
Cincinnati, Ohio 45236
Phone 513.403.5657
www.RetainingWallExpert.com

© COPYRIGHT, 2019, JOSEPH W. KOWALSKI. ALL RIGHTS RESERVED.

TITLE: WALL A – PROFILE VIEW (5+20 TO 10+40) CONCRETE PANEL DETAILS

FOR: Costco Wholesale

PROJECT: Costco– South Windsor

LOCATION: South Windsor, Connecticut

SCALE: As Noted

SHEET: 18064-R.4

CAD FILE: D:\Google Drive\KEFILES\2018\18064--Costco--SWindsor\Wall Designs\Costco--SWindsor\R--092520.dwg LAYOUT: R4
PLOTTED: 9/25/2020 4:15 PM BY: joe

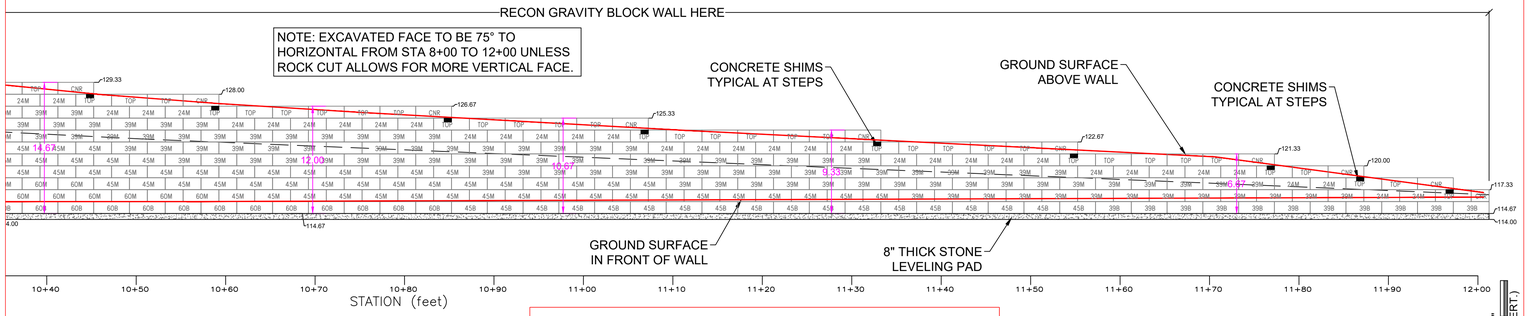

1 / R.5 PROFILE VIEW - WALL A (10+40 TO 11+95)
Scale: 1" = 8' H &V

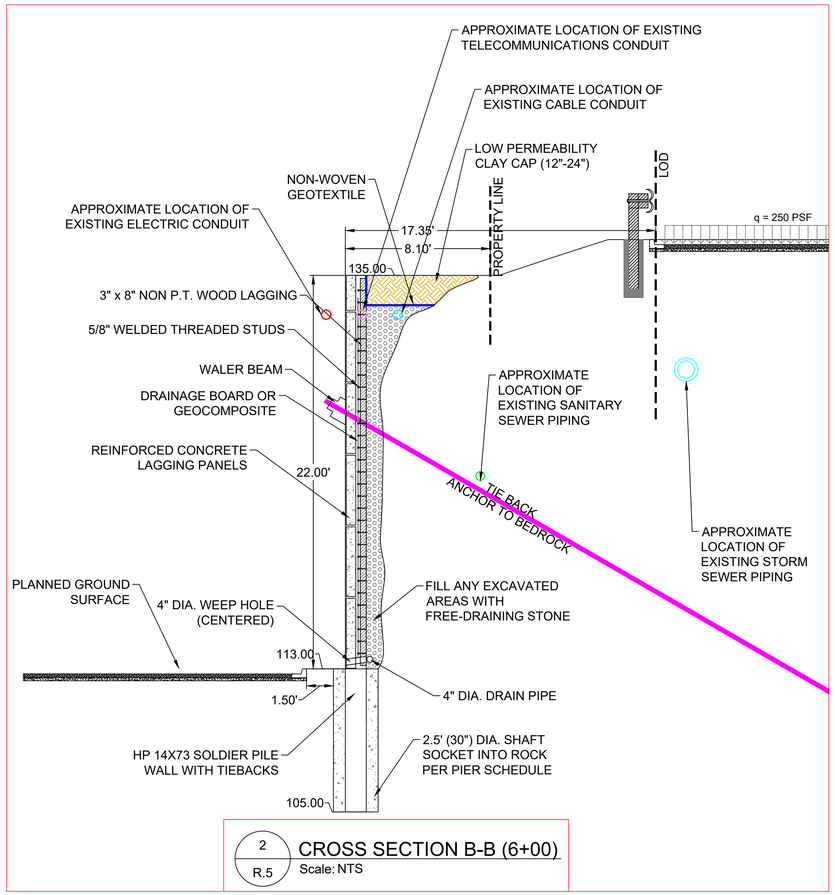

2 / R.5 CROSS SECTION B-B (6+00)
Scale: NTS

PIER SCHEDULE

PIER NUMBER	TOP ELEVATION	TOP OF CONCRETE	BOTTOM ELEVATION	BEAM LEGTH (FT)	TIEBACK LENGTH (FT)	TIEBACK TYPE	NO. OF STRANDS
DS1	127.0	118.75	107.0	20	-	-	-
DS2	127.0	118.75	107.0	20	-	-	-
DS3	128.0	118.75	108.0	20	-	-	-
DS4	128.0	119.00	103.0	25	-	-	-
DS5	129.0	119.00	104.0	25	-	-	-
DS6	130.0	119.00	105.0	25	-	-	-
DS7	130.0	119.00	105.0	25	35	TYPE A	3
DS8	131.0	119.00	106.0	25			
DS9	132.0	119.00	107.0	25	35	TYPE A	3
DS10	132.0	119.00	107.0	25			
DS11	132.0	119.00	107.0	25	35	TYPE A	3
DS12	132.0	119.00	107.0	25			
DS13	132.0	119.00	107.0	25	35	TYPE A	3
DS14	132.0	119.00	107.0	25			
DS15	133.0	119.00	108.0	25	35	TYPE A	3
DS16	133.0	118.75	108.0	25			
DS17	133.0	118.50	108.0	25	35	TYPE A	3
DS18	133.0	118.50	108.0	25			
DS19	133.0	118.50	108.0	25	35	TYPE A	3
DS20	133.0	118.25	108.0	25			
DS21	133.0	118.25	108.0	25	35	TYPE A	3
DS22	133.0	118.00	108.0	25			
DS23	133.0	118.00	108.0	25	35	TYPE A	3
DS24	133.0	117.75	108.0	25			
DS25	133.0	117.75	108.0	25	40	TYPE B	4
DS26	134.0	117.50	109.0	25			
DS27	134.0	117.50	109.0	25	40	TYPE B	4
DS28	134.0	117.50	109.0	25			
DS29	134.0	117.25	109.0	25	40	TYPE B	4
DS30	134.0	117.25	109.0	25			
DS31	134.0	117.00	109.0	25	40	TYPE B	4
DS32	134.0	117.00	109.0	25			
DS33	134.0	116.75	109.0	25	40	TYPE B	4
DS34	134.0	116.75	109.0	25			
DS35	134.0	116.75	104.0	30	40	TYPE B	4
DS36	134.0	116.50	104.0	30			
DS37	134.0	116.25	104.0	30	40	TYPE B	4
DS38	135.0	116.25	105.0	30			
DS39	135.0	116.00	105.0	30	45	TYPE C	5
DS40	135.0	116.00	105.0	30			
DS41	135.0	115.75	105.0	30	45	TYPE C	5
DS42	135.0	115.50	105.0	30			
DS43	135.0	115.25	105.0	30	45	TYPE C	5
DS44	135.0	115.00	105.0	30			
DS45	135.0	115.00	105.0	30	45	TYPE C	5
DS46	135.0	114.75	105.0	30			
DS47	135.0	114.50	105.0	30	45	TYPE C	5
DS48	135.0	114.25	105.0	30			
DS49	135.0	114.25	105.0	30	50	TYPE D	6
DS50	135.0	114.00	105.0	30			
DS51	135.0	113.75	105.0	30	50	TYPE D	6
DS52	135.0	113.50	105.0	30			
DS53	135.0	113.00	105.0	30	50	TYPE D	6
DS54	135.0	113.00	105.0	30			
DS55	135.0	113.00	105.0	30	50	TYPE D	6
DS56	135.0	113.00	105.0	30			
DS57	135.0	113.00	105.0	30	50	TYPE D	6
DS58	134.0	113.00	104.0	30			
DS59	134.0	113.25	104.0	30	45	TYPE C	5
DS60	134.0	113.75	104.0	30			
DS61	134.0	114.00	104.0	30	45	TYPE C	5
DS62	134.0	114.00	104.0	30			
DS63	134.0	114.25	104.0	30	40	TYPE B	4
DS64	134.0	114.50	104.0	30			
DS65	134.0	114.50	104.0	30	40	TYPE B	4
DS66	133.0	114.75	108.0	25			
DS67	133.0	115.00	108.0	25	35	TYPE A	3
DS68	133.0	115.25	108.0	25			
DS69	133.0	115.50	108.0	25	35	TYPE A	3
DS70	132.0	115.75	107.0	25			
DS71	132.0	116.00	107.0	25	35	TYPE A	3
DS72	132.0	116.25	107.0	25			
DS73	132.0	116.50	107.0	25	-	-	-
DS74	132.0	116.75	107.0	25	-	-	-
DS75	132.0	117.00	107.0	25	-	-	-
DS76	132.0	117.00	107.0	25	-	-	-
DS77	131.0	117.00	106.0	25	-	-	-
DS78	131.0	117.00	106.0	25	-	-	-
DS79	131.0	117.00	106.0	25	-	-	-
DS80	131.0	117.00	106.0	25	-	-	-

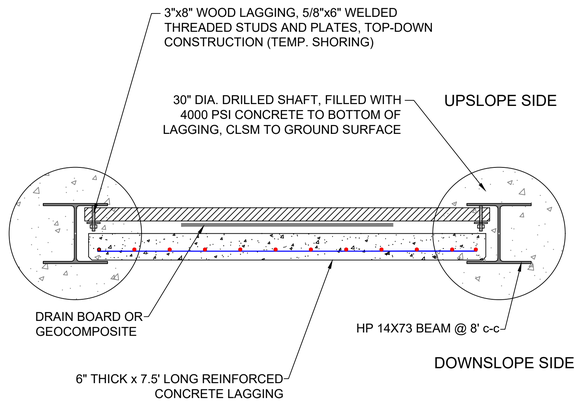

3 / R.5 CONCRETE LAGGING DETAILS
Scale: NTS

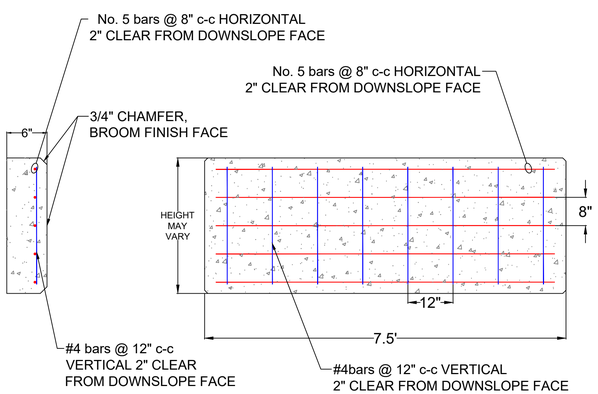

4 / R.5 REINFORCEMENT DETAILS
Scale: NTS

TIEBA			
Anchor Type	Unbonded Length (ft)	Min. Bond Length (ft)	N
A	15.00	10.00	
B	15.00	13.00	
C	15.00	15.00	
D	15.00	18.00	

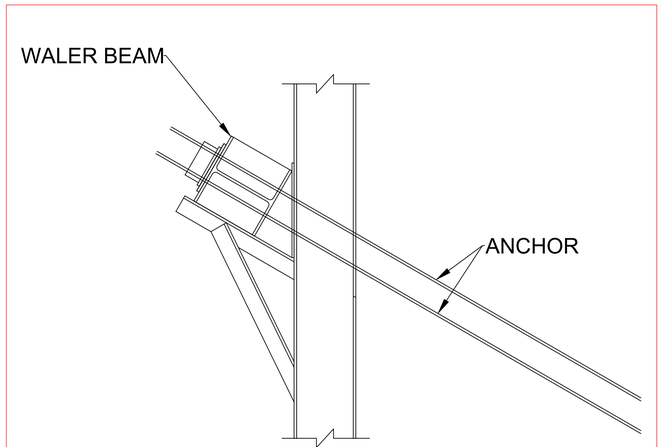

5 / R.5 WALER DETAILS
Scale: NTS

REV	DATE	DESCRIPTION

PRELIMINARY NOT FOR CONSTRUCTION

SIGNATURE DATE:

JOSEPH W. KOWALSKI, P.E.
3710 Section Road
Cincinnati, Ohio 45236
Phone 513.403.5657
www.RetainingWallExpert.com

© COPYRIGHT, 2019, JOSEPH W. KOWALSKI. ALL RIGHTS RESERVED.

TITLE: PROFILE VIEW, CROSS SECTION B-B, CONCRETE LAGGING DETAILS AND TIEBACK DETAILS

FOR: Costco Wholesale

PROJECT: Costco- South Windsor

LOCATION: South Windsor, Connecticut

SCALE: As Noted

SHEET: 18064-R.5

CAD FILE: D:\Google Drive\KEYFILES\2018\18064-Costco-SWindsor\Wall Designs\Costco-SWindsorCT-092320.dwg LAYOUT: R5 PLOTTED: 9/25/2020 4:15 PM BY: joe

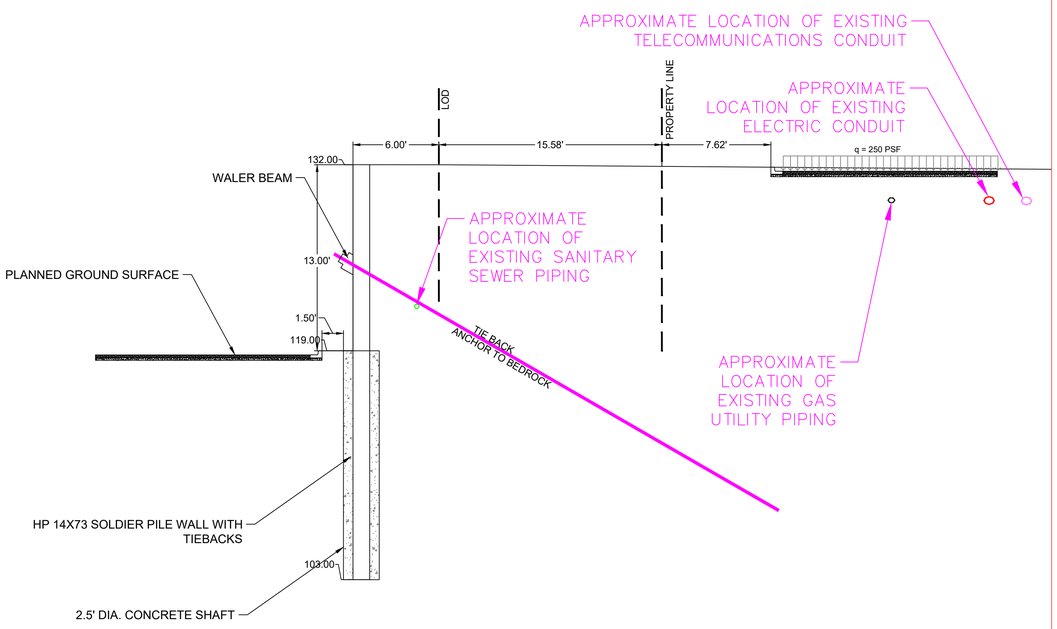

1 R.6 CROSS SECTION A-A (2+50)
Scale: 1" = 5'

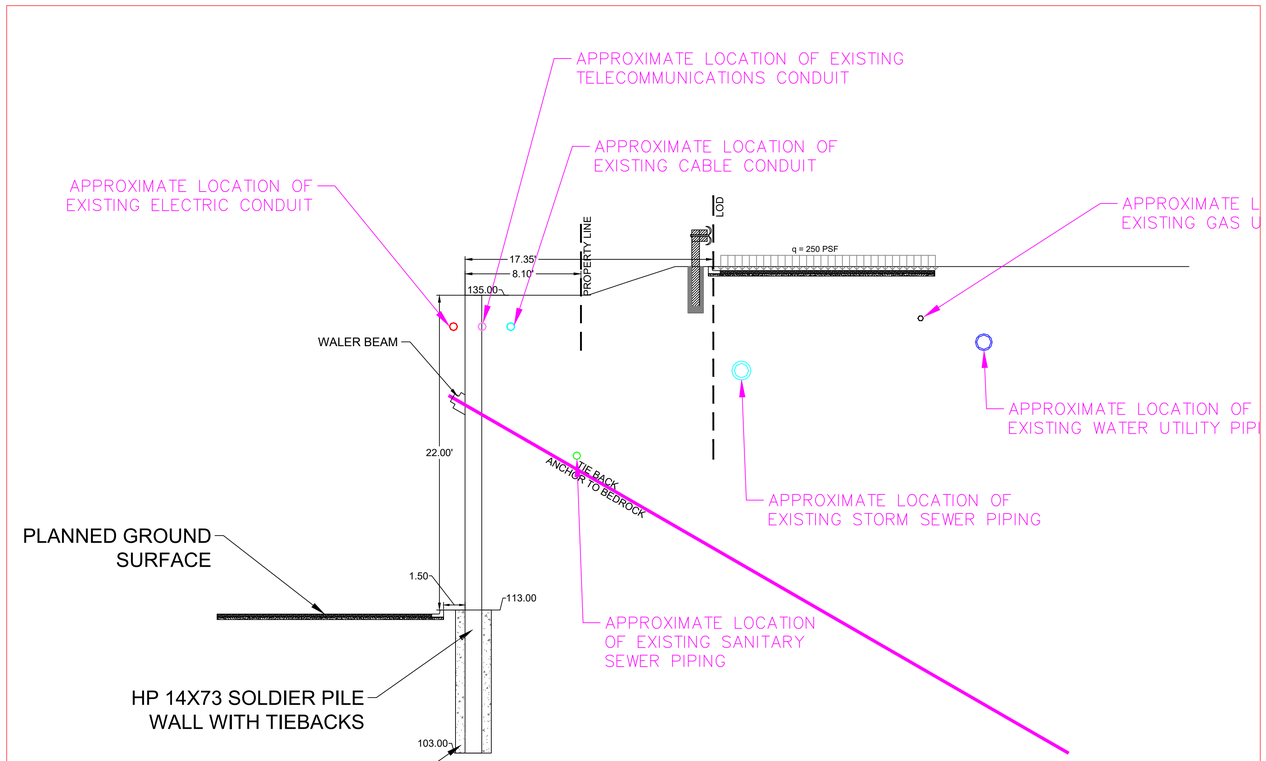

2 R.6 CROSS SECTION B-B (6+00)
Scale: 1" = 5'

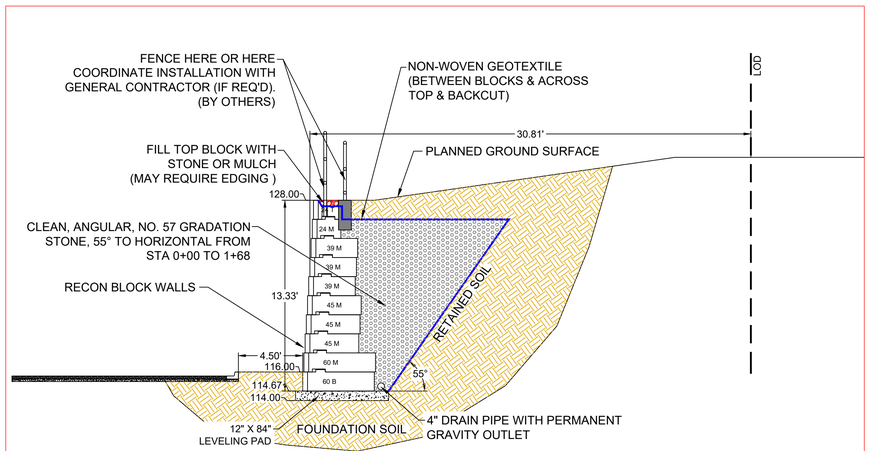

3 R.6 CROSS SECTION C-C (9+00)
Scale: 1" = 5'

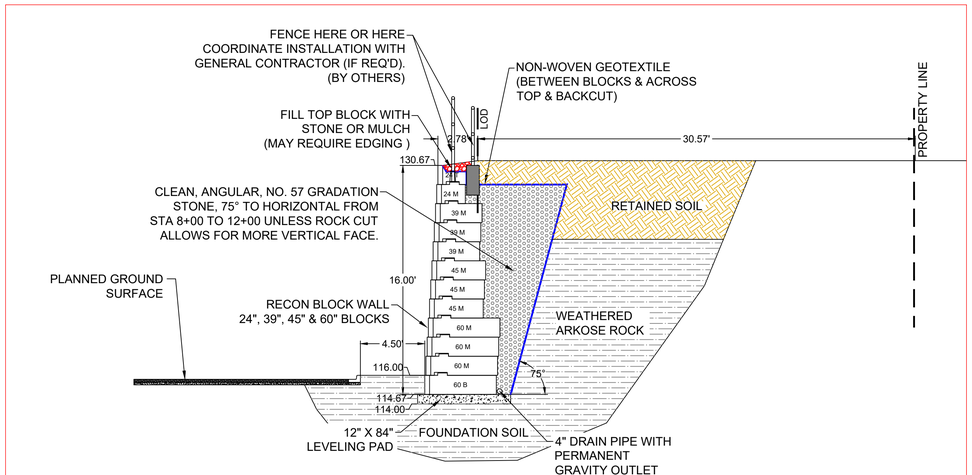

4 R.6 CROSS SECTION D-D (10+00)
Scale: 1" = 5'

REV	DATE	DESCRIPTION

PRELIMINARY NOT FOR CONSTRUCTION

SIGNATURE DATE:

JOSEPH W. KOWALSKI, P.E.
3710 Section Road
Cincinnati, Ohio 45236
Phone 513.403.5657
www.RetainingWallExpert.com

© COPYRIGHT, 2019, JOSEPH W. KOWALSKI. ALL RIGHTS RESERVED.

TITLE: CROSS SECTIONS

FOR: Costco Wholesale

PROJECT: Costco– South Windsor

LOCATION: South Windsor, Connecticut

SCALE: As Noted

SHEET: 18064-R.6

CAD FILE: D:\Google Drive\KERLES\2018\18064-Costco-SWindsor\Wall Designs\Costco-SWindsorCT-092320.dwg LAYOUT: R6 PLOTTED: 9/29/2020 4:15 PM BY: joe

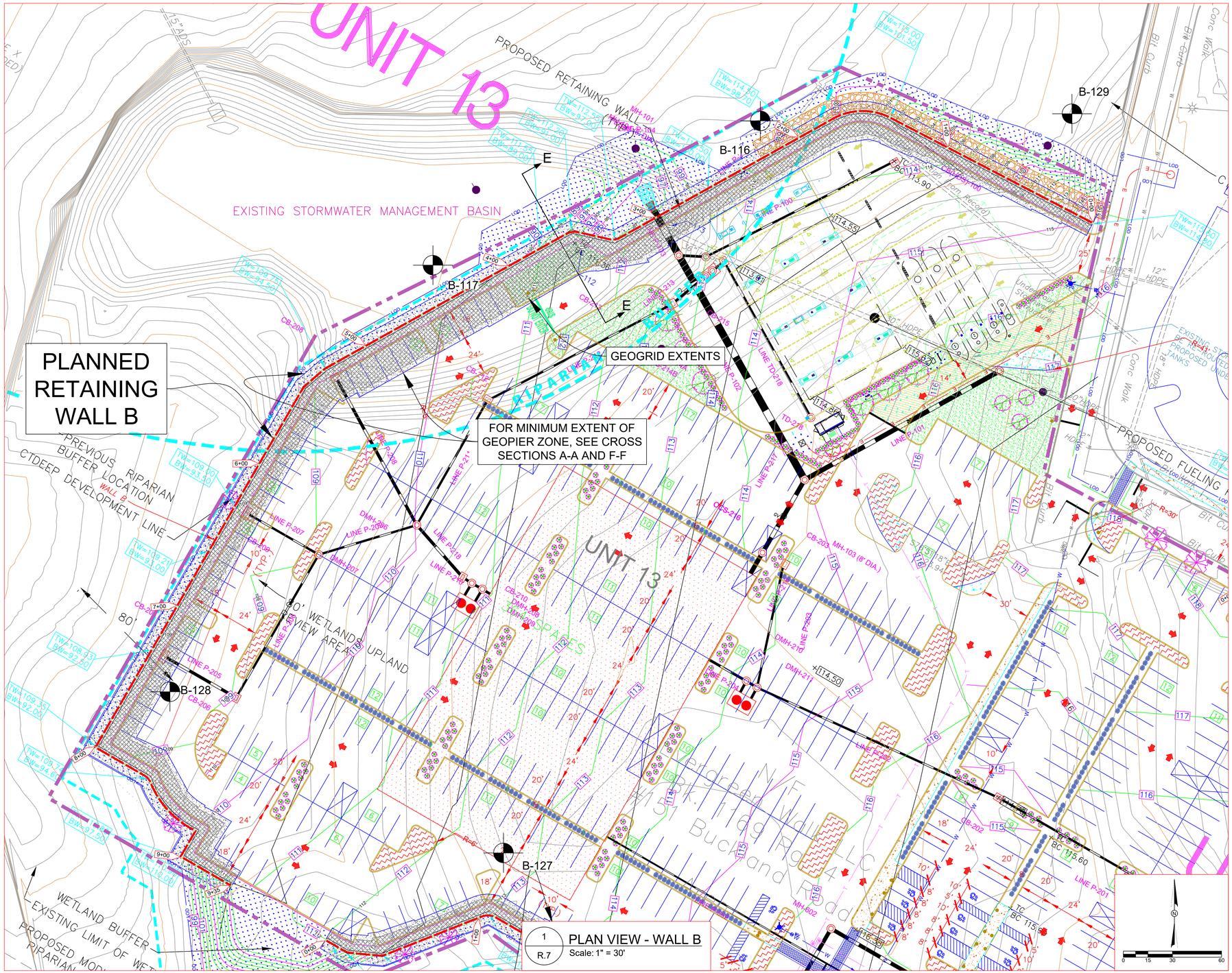

1 R.7 PLAN VIEW - WALL B
Scale: 1" = 30'

REV	DATE	DESCRIPTION

PRELIMINARY NOT FOR CONSTRUCTION

SIGNATURE DATE:

JOSEPH W. KOWALSKI, P.E.
3710 Section Road
Cincinnati, Ohio 45236
Phone 513.403.5657
www.RetainingWallExpert.com

© COPYRIGHT, 2019, JOSEPH W. KOWALSKI. ALL RIGHTS RESERVED.

TITLE: WALL B – PLAN VIEW

FOR: Costco Wholesale

PROJECT: Costco– South Windsor

LOCATION: South Windsor, Connecticut

SCALE: As Noted

SHEET: 18064-R.7

CAD FILE: D:\Google Drive\KEFILES\2018\18064-Costco-SWindsorCT\Wall Designs\Costco-SWindsorCT-092520.dwg LAYOUT: R7 PLOTTED: 9/25/2020 4:15 PM BY: joe

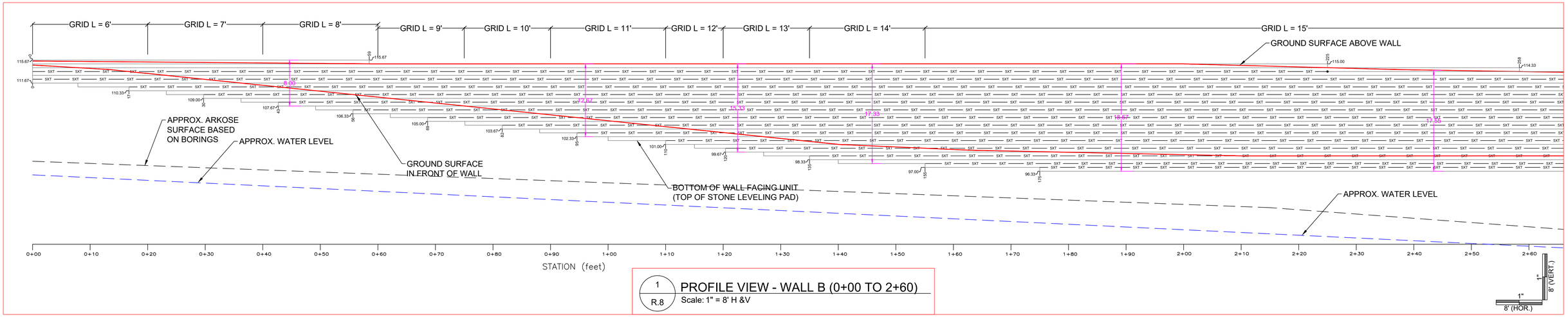

1 / R.8 PROFILE VIEW - WALL B (0+00 TO 2+60)
Scale: 1" = 8' H &V

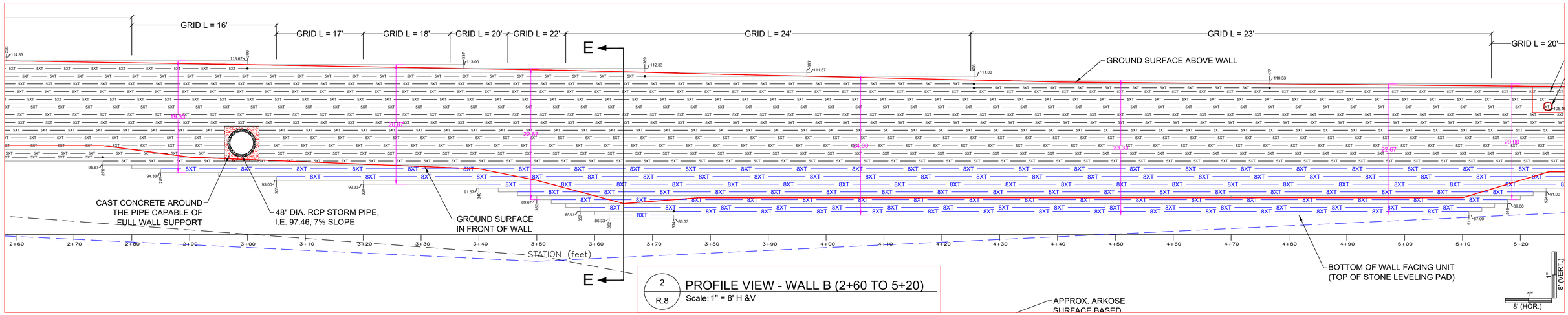

2 / R.8 PROFILE VIEW - WALL B (2+60 TO 5+20)
Scale: 1" = 8' H &V

APPROX. ARKOSE SURFACE BASED

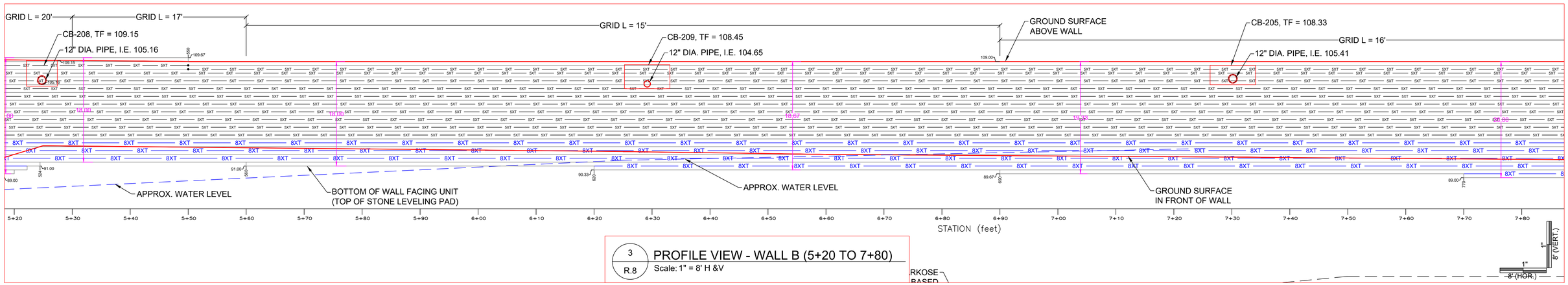

3 / R.8 PROFILE VIEW - WALL B (5+20 TO 7+80)
Scale: 1" = 8' H &V

RKOSE BASED

REV	DATE	DESCRIPTION

PRELIMINARY NOT FOR CONSTRUCTION

SIGNATURE DATE:

JOSEPH W. KOWALSKI, P.E.
3710 Section Road
Cincinnati, Ohio 45236
Phone 513.403.5657
www.RetainingWallExpert.com

© COPYRIGHT, 2019, JOSEPH W. KOWALSKI. ALL RIGHTS RESERVED.

TITLE: WALL B – PROFILE VIEW (0+00 TO 7+80)

FOR: Costco Wholesale

PROJECT: Costco– South Windsor

LOCATION: South Windsor, Connecticut

SCALE: As Noted

SHEET: 18064-R.8

CAD FILE: D:\Google Drive\KEFILES\2018\18064-Costco-SWindsor\Wall Designs\Costco-SWindsorCI-092520.dwg
LAYOUT: R8
PLOTTED: 9/25/2020 4:15 PM BY: joe

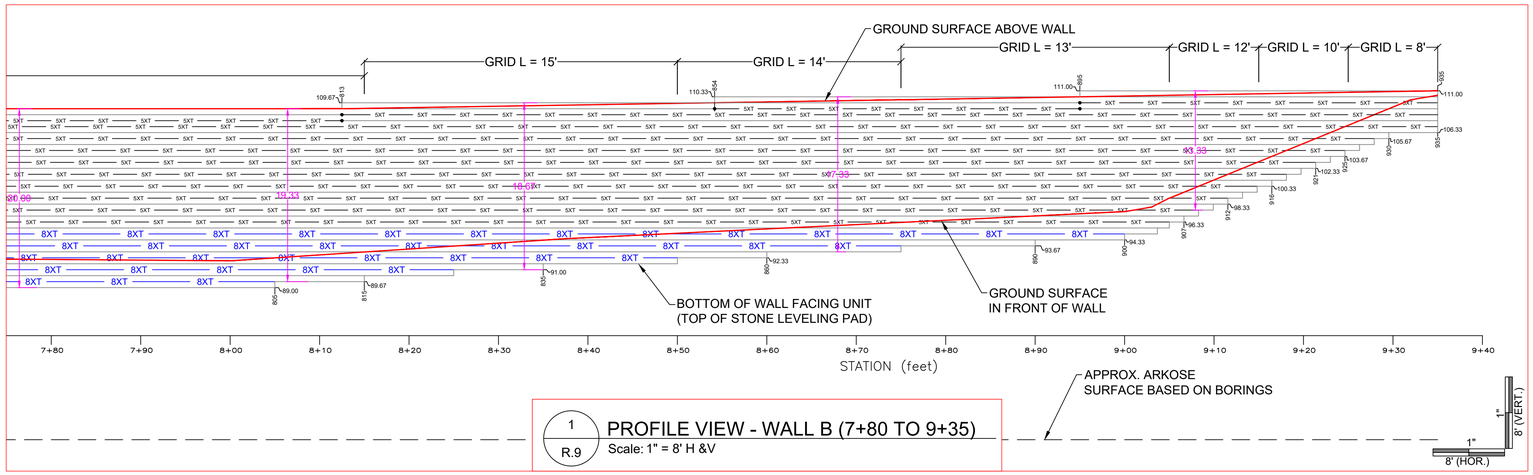

1 / R.9 PROFILE VIEW - WALL B (7+80 TO 9+35)

Scale: 1" = 8' H &V

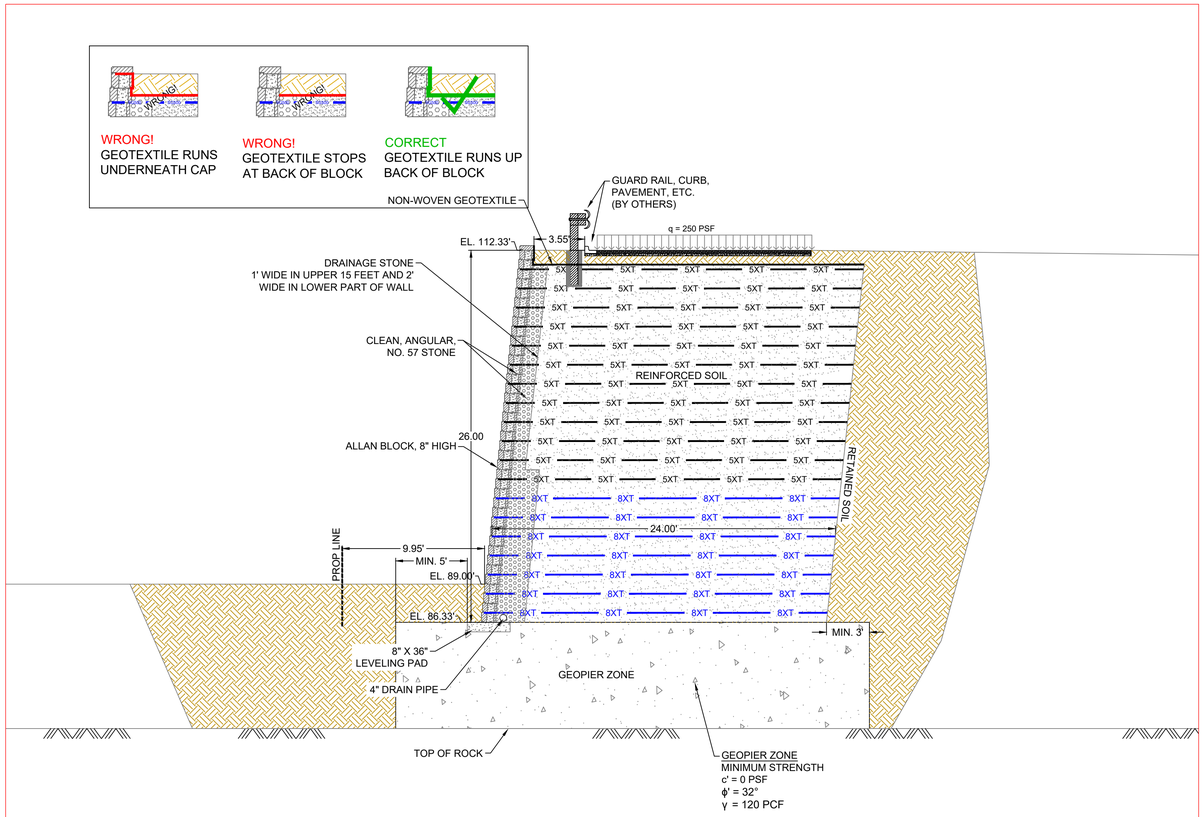

2 / R.9 CROSS SECTION E-E (3+65)

Scale: 1" = 5'

REV	DATE	DESCRIPTION

PRELIMINARY
NOT FOR
CONSTRUCTION

SIGNATURE DATE:

JOSEPH W. KOWALSKI, P.E.
3710 Section Road
Cincinnati, Ohio 45236
Phone 513.403.5657
www.RetainingWallExpert.com

© COPYRIGHT, 2019, JOSEPH W. KOWALSKI. ALL RIGHTS RESERVED.

TITLE: WALL B – PROFILE VIEW (7+80 TO 9+35) AND CROSS SECTION E–E (3+65)

FOR: Costco Wholesale

SCALE: As Noted

PROJECT: Costco– South Windsor

SHEET: 18064-R.9

LOCATION: South Windsor, Connecticut

CAD FILE: D:\Google Drive\KEITLER\2018\18064-Costco-SWindsor\T\Wall Designs\Costco-SWindsorCT-092020.dwg LAYOUT: R9 PLOTTED: 9/29/2020 4:15 PM BY: joe

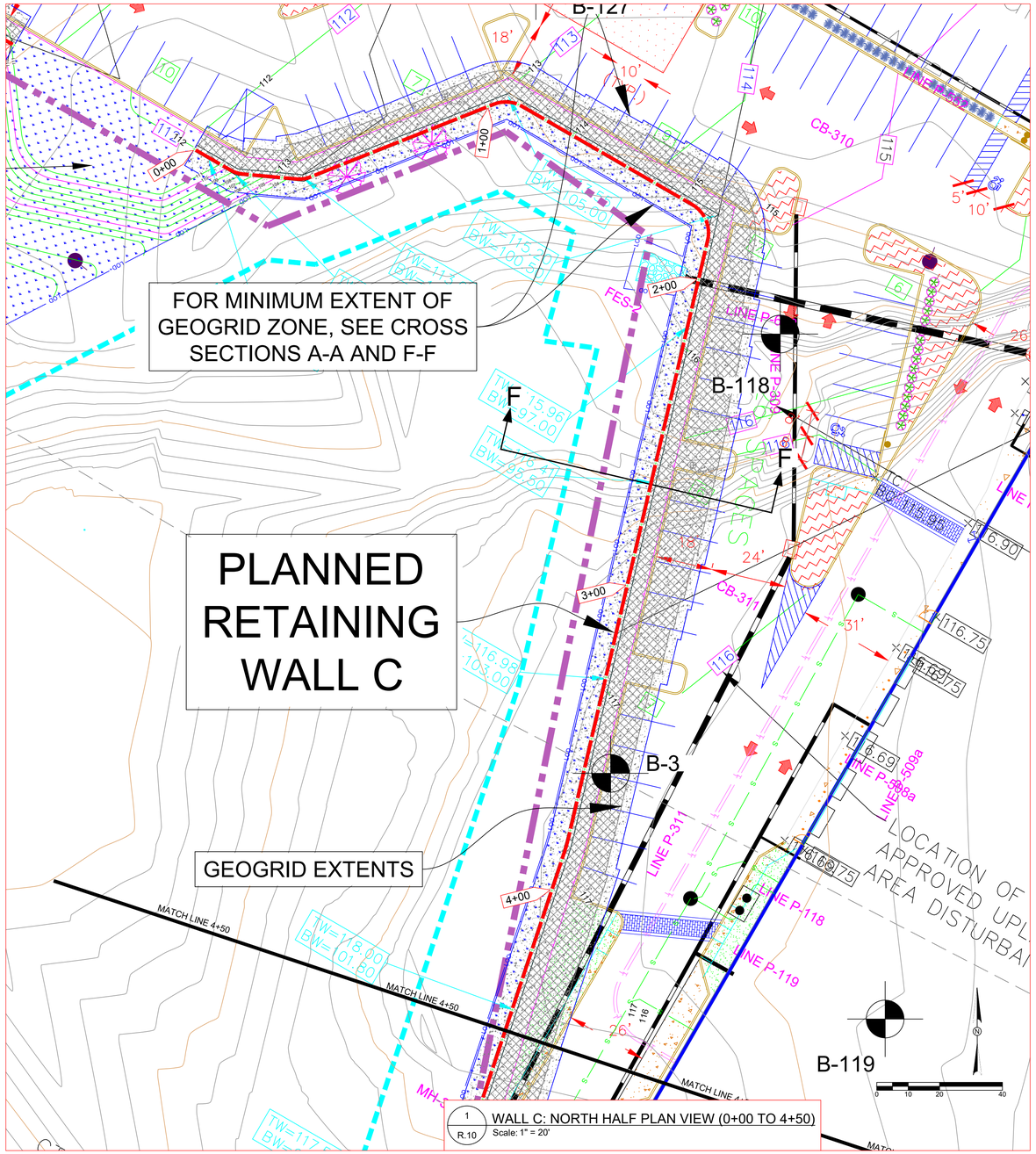

1 R.10 WALL C: NORTH HALF PLAN VIEW (0+00 TO 4+50)
Scale: 1" = 20'

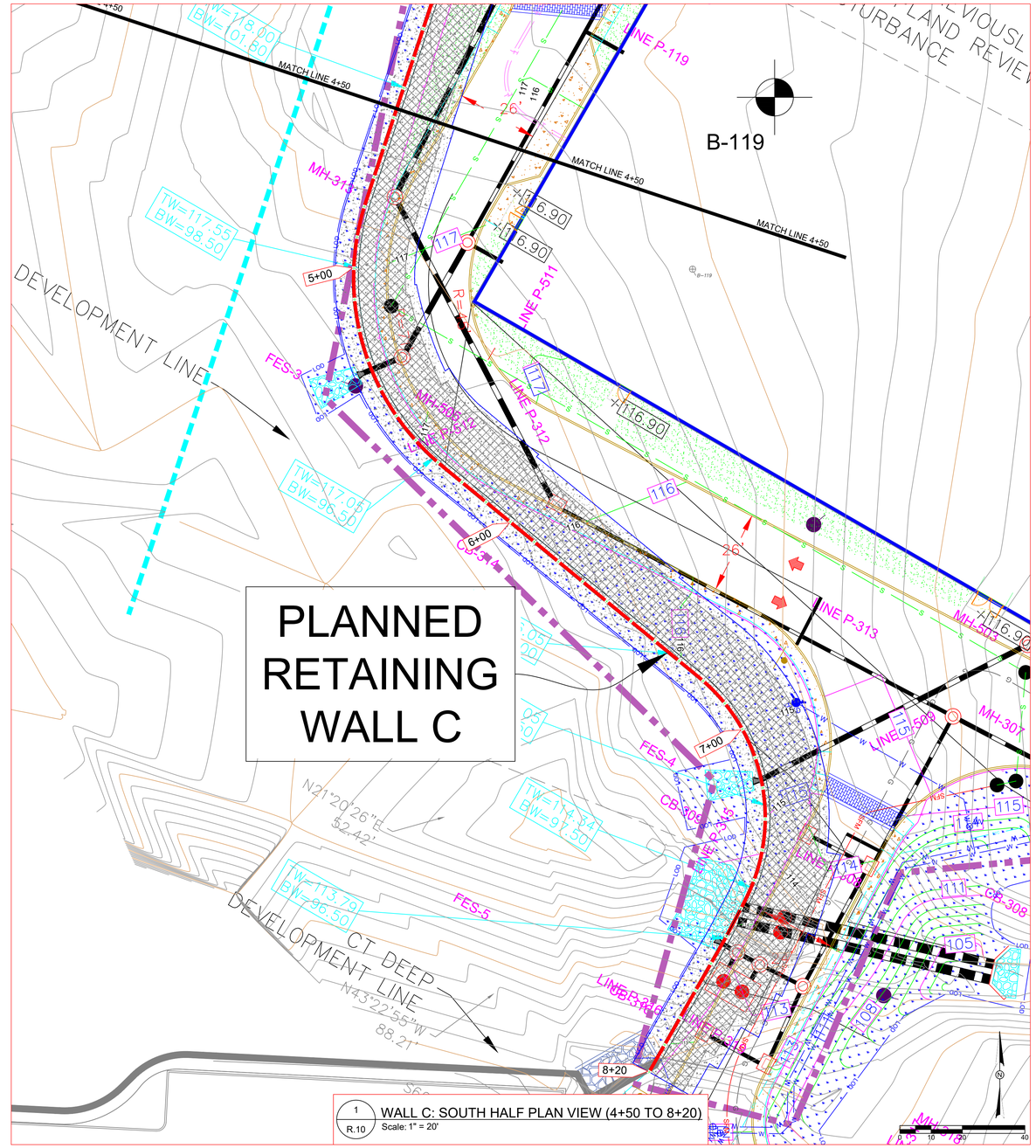

1 R.10 WALL C: SOUTH HALF PLAN VIEW (4+50 TO 8+20)
Scale: 1" = 20'

REV	DATE	DESCRIPTION

PRELIMINARY NOT FOR CONSTRUCTION

SIGNATURE DATE:

JOSEPH W. KOWALSKI, P.E.
3710 Section Road
Cincinnati, Ohio 45236
Phone 513.403.5657
www.RetainingWallExpert.com

© COPYRIGHT, 2019, JOSEPH W. KOWALSKI. ALL RIGHTS RESERVED.

TITLE: WALL C – PLAN VIEW

FOR: Costco Wholesale

PROJECT: Costco– South Windsor

LOCATION: South Windsor, Connecticut

SCALE: As Noted

SHEET: 18064-R.10

CAD FILE: D:\Google Drive\KEFILES\2018\18064-Costco-SWindsor\Wall Designs\Costco-SWindsorC1-092520.dwg LAYOUT: R10 PLOTTED: 9/25/2020 4:15 PM BY: joe

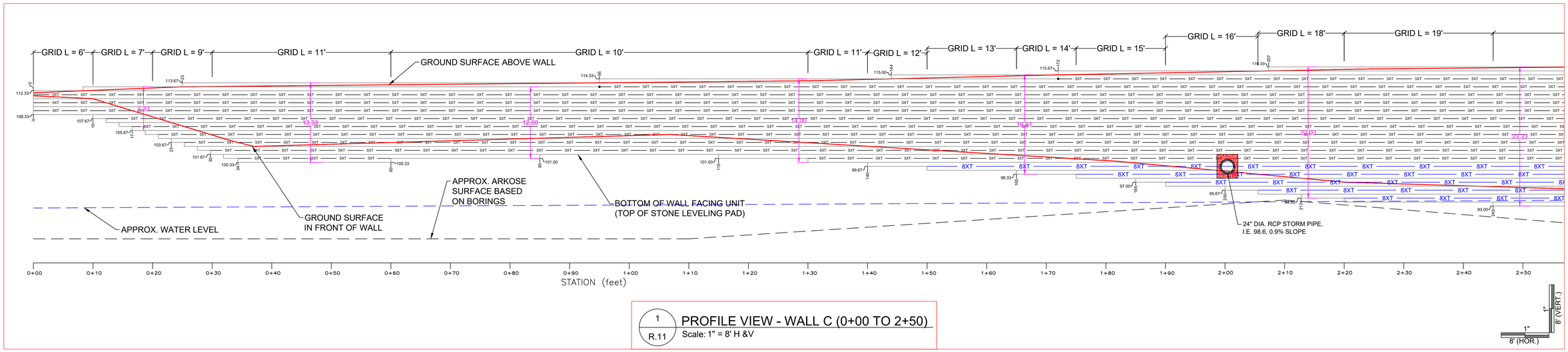

1 / R.11 PROFILE VIEW - WALL C (0+00 TO 2+50)
Scale: 1" = 8' H &V

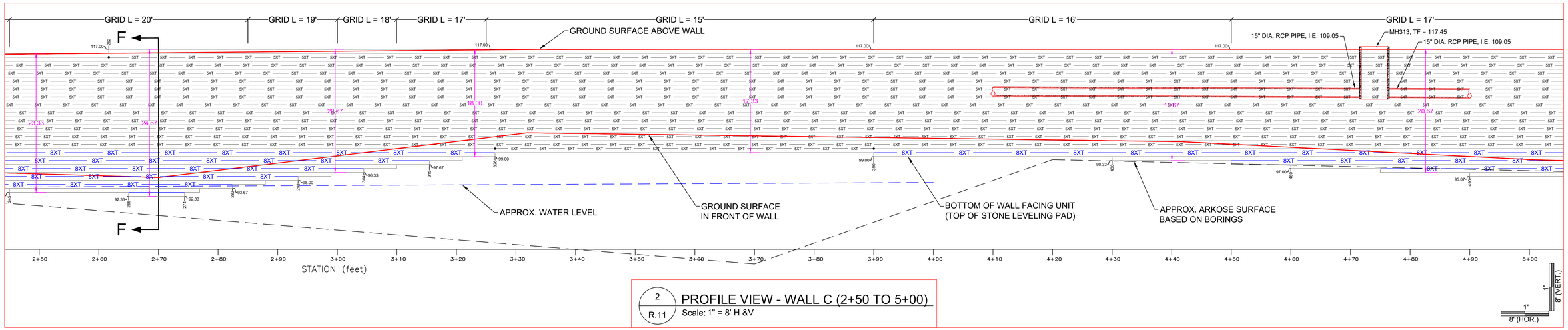

2 / R.11 PROFILE VIEW - WALL C (2+50 TO 5+00)
Scale: 1" = 8' H &V

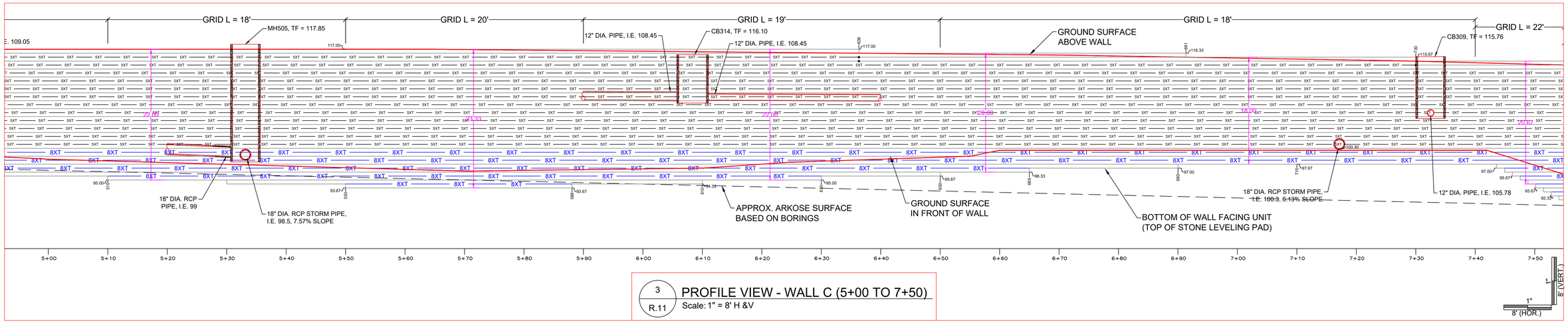

3 / R.11 PROFILE VIEW - WALL C (5+00 TO 7+50)
Scale: 1" = 8' H &V

REV	DATE	DESCRIPTION

PRELIMINARY NOT FOR CONSTRUCTION

SIGNATURE DATE:

JOSEPH W. KOWALSKI, P.E.
3710 Section Road
Cincinnati, Ohio 45236
Phone 513.403.5657
www.RetainingWallExpert.com

© COPYRIGHT, 2019, JOSEPH W. KOWALSKI. ALL RIGHTS RESERVED.

TITLE: WALL C – PROFILE VIEW (0+00 TO 7+50)

FOR: Costco Wholesale

PROJECT: Costco– South Windsor

LOCATION: South Windsor, Connecticut

SCALE: As Noted

SHEET: 18064-R.11

CAD FILE: D:\Google Drive\KERLES\2018\18064-Costco-SWindsor\CT\Wall Design\Costco-SWindsorCT-092520.dwg LAYOUT: R11 PLOTTED: 9/25/2020 4:15 PM BY: Joe

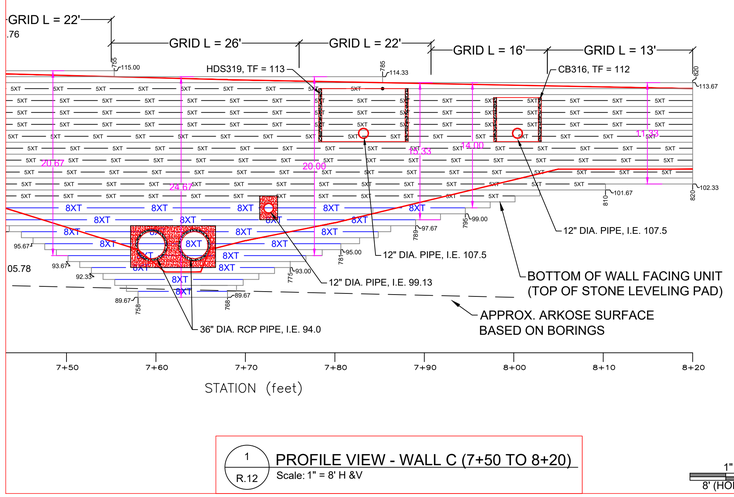

1 R.12 PROFILE VIEW - WALL C (7+50 TO 8+20)
Scale: 1" = 8' H &V

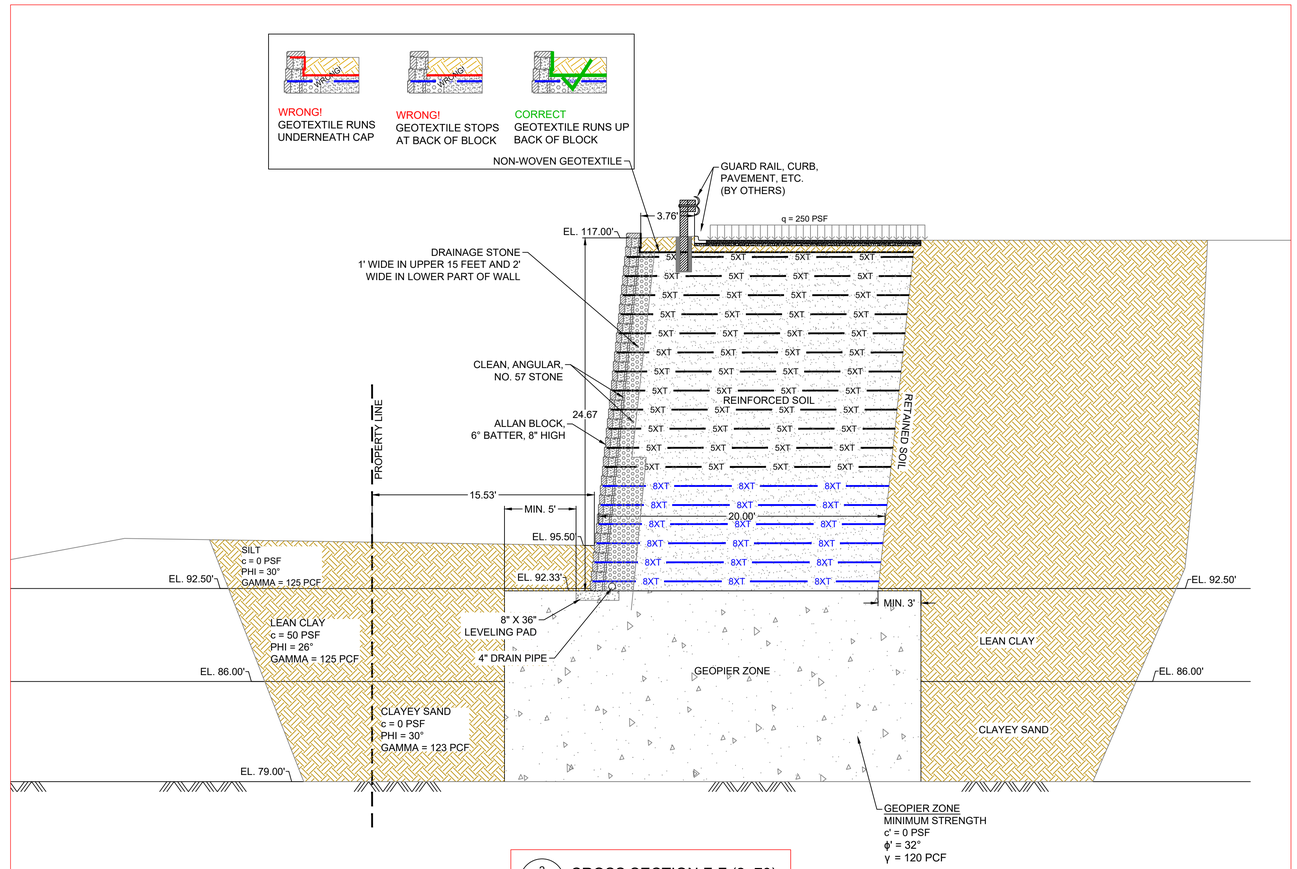

2 R.12 CROSS SECTION F-F (2+70)
Scale: 1" = 5'

REV	DATE	DESCRIPTION

PRELIMINARY
NOT FOR
CONSTRUCTION

SIGNATURE DATE:

JOSEPH W. KOWALSKI, P.E.
3710 Section Road
Cincinnati, Ohio 45236
Phone 513.403.5657
www.RetainingWallExpert.com

© COPYRIGHT, 2019, JOSEPH W. KOWALSKI. ALL RIGHTS RESERVED.

TITLE: WALL 3 – PROFILE VIEW (7+50 TO 8+20)
CROSS SECTION F–F (2+70)

FOR: Costco Wholesale

PROJECT: Costco– South Windsor

LOCATION: South Windsor, Connecticut

SCALE: As Noted

SHEET: 18064-R.12

CAD FILE: D:\Google Drive\VERTEX\2018\18064-Costco-SWindsorCT\Wall Designs\Costco-SWindsorCT-092520.dwg LAYOUT: R12 PLOTTED: 9/25/2020 4:16 PM BY: joe

SPECIFICATIONS AND CONSTRUCTION NOTES FOR MECHANICALLY STABILIZED EARTH (MSE) WALLS

PART 1 - GENERAL

1.01 SECTION INCLUDES

A. RETAINING WALL SYSTEM CONSTRUCTED OF CONCRETE SEGMENTAL RETAINING WALL UNITS
B. GEOSYNTHETIC REINFORCEMENT
C. LEVELING PAD BASE
D. DRAINAGE AGGREGATE
E. BACKFILL
F. DRAINAGE PIPE
G. GEOTEXTILE
H. ADHESIVES

1.02 REFERENCES

A. AMERICAN ASSOCIATION OF STATE HIGHWAY TRANSPORTATION OFFICIALS (AASHTO)
1. AASHTO M288 GEOTEXTILE SPECIFICATION FOR HIGHWAY APPLICATIONS
2. AASHTO STANDARD SPECIFICATIONS FOR HIGHWAY BRIDGES

B. AMERICAN SOCIETY FOR TESTING AND MATERIALS (ASTM)
1. ASTM C140 STANDARD TEST METHODS FOR SAMPLING AND TESTING CONCRETE MASONRY UNITS AND RELATED UNITS
2. ASTM C1262 STANDARD TEST METHOD FOR EVALUATING THE FREEZE-THAW DURABILITY OF MANUFACTURED CONCRETE MASONRY UNITS AND RELATED CONCRETE UNITS
3. ASTM C1372 STANDARD SPECIFICATION FOR SEGMENTAL RETAINING WALL UNITS
4. ASTM D448 STANDARD CLASSIFICATION FOR SIZES OF AGGREGATE FOR ROAD AND BRIDGE CONSTRUCTION
5. ASTM D698 STANDARD TEST METHODS FOR LABORATORY COMPACTION CHARACTERISTICS OF SOIL USING MODIFIED EFFORT 12,400 FT-LBF/F3) (600 KN-M/M3)
6. ASTM D1557 STANDARD TEST METHODS FOR LABORATORY COMPACTION CHARACTERISTICS OF SOIL USING STANDARD EFFORT (12,400 FT-LBF/F3) (600 KN-M/M3)
7. ASTM D1556 STANDARD TEST METHOD FOR DENSITY AND UNIT WEIGHT OF SOIL IN PLACE BY THE SAND CONE METHOD
8. ASTM D1557 STANDARD TEST METHODS FOR LABORATORY COMPACTION CHARACTERISTICS OF SOIL USING MODIFIED EFFORT (56,000 FT-LBF/F3) (2700 KN-M/M3)
9. ASTM D2487 STANDARD CLASSIFICATION OF SOILS FOR ENGINEERING PURPOSES (UNIFIED SOIL CLASSIFICATION SYSTEM)
10. ASTM D2922 STANDARD TEST METHODS FOR DENSITY OF SOIL AND SOIL-AGGREGATE IN PLACE BY NUCLEAR METHODS (SHALLOW DEPTH)
11. ASTM D3034 STANDARD SPECIFICATION FOR TYPE PSM PVC SEWER PIPE AND FITTINGS
12. ASTM D4318 STANDARD TEST METHODS FOR LIQUID LIMIT, PLASTIC LIMIT, AND PLASTICITY INDEX OF SOILS
13. ASTM D4595 STANDARD TEST METHOD FOR TENSILE PROPERTIES OF GEOTEXTILES BY THE WIDE-WIDTH STRIP METHOD
14. ASTM D5262 STANDARD TEST METHOD FOR EVALUATING THE UNCONFINED TENSION CREEP BEHAVIOR OF GEOSYNTHETICS
15. ASTM F405 STANDARD SPECIFICATION FOR CORRUGATED POLYETHYLENE (PE) TUBING AND FITTINGS
16. ASTM G51 STANDARD TEST METHOD FOR MEASURING PH OF SOIL FOR USE IN CORROSION TESTING

C. NATIONAL CONCRETE MASONRY ASSOCIATION (NCMA)
1. NCMA DESIGN MANUAL FOR SEGMENTAL RETAINING WALLS, THIRD EDITION, FIFTH PRINTING (2010)
2. NCMA SRWU-1 DETERMINATION OF CONNECTION STRENGTH BETWEEN GEOSYNTHETICS AND SEGMENTAL CONCRETE UNITS
3. NCMA SRWU-2 DETERMINATION OF SHEAR STRENGTH BETWEEN SEGMENTAL CONCRETE UNITS

1.03 DEFINITIONS

A. REINFORCED SOIL: SOIL WHICH IS USED AS FILL BEHIND THE DRAINAGE STONE WITHIN WITHIN THE GEOGRID-REINFORCED ZONE.
B. REINFORCED ZONE: THAT AREA OF RETAINING WALL BACKFILL WHICH CONTAINS LAYERS OF GEOGRID REINFORCEMENT.
C. DRAINAGE STONE: MATERIAL USED WITHIN, BETWEEN, AND DIRECTLY BEHIND THE CONCRETE RETAINING WALL UNITS.
D. GEOTEXTILE: MATERIAL USED FOR SEPARATION AND FILTRATION OF DISSIMILAR SOIL TYPES.
E. FOUNDATION SOIL: SOIL MASS SUPPORTING THE LEVELING PAD AND REINFORCED SOIL ZONE OF THE RETAINING WALL SYSTEM.
F. RETAINED SOIL: SOIL MASS BEHIND THE REINFORCED ZONE.
G. GEOSYNTHETIC REINFORCEMENT: MATERIAL SPECIFICALLY FABRICATED FOR USE AS A SOIL REINFORCEMENT.
H. PROJECT GEOTECHNICAL ENGINEER: A REGISTERED ENGINEER EMPLOYED BY THE OWNER TO PERFORM SITE OBSERVATIONS, PROVIDE RECOMMENDATIONS FOR FOUNDATION SUPPORT, AND VERIFY SOIL SHEAR STRENGTH PARAMETERS.
I. WALL DESIGN ENGINEER: KOWALSKI ENGINEERING, INC.

1.04 SUBMITTALS

A. SUBMIT THE FOLLOWING:
1. PRODUCT DATA: MATERIAL DESCRIPTION AND INSTALLATION INSTRUCTIONS FOR EACH MANUFACTURED PRODUCT SPECIFIED.
2. SAMPLES
a. FURNISH ONE UNIT IN THE COLOR AND FACE PATTERN SPECIFIED, IF REQUESTED.
b. FURNISH 12 INCH SQUARE OR LARGER PIECE OF THE GEOSYNTHETIC REINFORCEMENT SPECIFIED.
c. FURNISH 5-GALLON BUCKET OF REINFORCED BACKFILL MATERIAL FOR GRADATION, DIRECT SHEAR TESTING, AND ENGINEER APPROVAL TWO WEEKS PRIOR TO STOCKPILING MATERIAL ON-SITE.
d. FURNISH 5-GALLON BUCKET OF DRAINAGE AGGREGATE FOR GRADATION, DIRECT SHEAR TESTING, AND ENGINEER APPROVAL TWO WEEKS PRIOR TO STOCKPILING MATERIAL ON-SITE.

3. TEST REPORTS: INDEPENDENT LABORATORY REPORTS STATING MOISTURE ABSORPTION AND COMPRESSIVE STRENGTH PROPERTIES OF THE CONCRETE RETAINING WALL UNITS MEET THE PROJECT SPECIFICATIONS WHEN TESTED IN ACCORDANCE WITH ASTM C140, SECTIONS 6, 8 AND 9.

1.05 DELIVERY, STORAGE AND HANDLING

A. DELIVER, STORE, AND HANDLE MATERIALS IN ACCORDANCE WITH MANUFACTURER'S RECOMMENDATIONS, IN SUCH A MANNER AS TO PREVENT DAMAGE. CHECK THE MATERIALS UPON DELIVERY TO ASSURE THAT PROPER MATERIAL HAS BEEN RECEIVED. STORE ABOVE GROUND ON WOOD PALLETS OR BLOCKING. REMOVE DAMAGED OR OTHERWISE UNSUITABLE MATERIAL, WHEN SO DETERMINED, FROM THE SITE.
1. EXPOSED FACES OF CONCRETE WALL UNITS SHALL BE FREE OF CHIPS, CRACKS, STAINS, AND OTHER IMPERFECTIONS DETRACTING FROM THEIR APPEARANCE.
2. PREVENT MUD, WET CEMENT, ADHESIVES AND SIMILAR MATERIALS WHICH MAY HARM APPEARANCE OF UNITS, FROM COMING IN CONTACT WITH SYSTEM COMPONENTS.

1.06 EXTRA MATERIALS

A. FURNISH OWNER WITH 3 REPLACEMENT UNITS IDENTICAL TO THOSE INSTALLED ON THE PROJECT.

PART 2 - PRODUCTS

2.01 MATERIALS

A. CONCRETE RETAINING WALL UNITS: MESA, VERSA LOK, KEYSTONE, ANCHOR DIAMOND PRO OR ALLAN BLOCK SERIES BLOCKS
1. COLOR AND OTHER OPTIONS TO BE SELECTED BY OWNER FROM MANUFACTURERS FULL RANGE OF OPTIONS
2. PRODUCT CONTACT INFORMATION: WWW.ALLANBLOCK.COM
B. GEOSYNTHETIC REINFORCEMENT: MIRAGRID 5XT, 8XT AS SHOWN ON THE DRAWINGS.
1. PRODUCT CONTACT INFORMATION: TENCATE MIRAFI, WWW.TENCATE.COM
C. LEVELING PAD BASE
1. AGGREGATE BASE: ODOT 304 CRUSHED STONE OR GRANULAR FILL MEETING THE FOLLOWING GRADATION AS DETERMINED IN ACCORDANCE WITH ASTM D448:

SIEVE SIZE	PERCENT PASSING
1 INCH	100
NO. 4	35 TO 70
NO. 40	10 TO 35
NO. 200	0 TO 15

a. BASE THICKNESS: 8 INCHES (MINIMUM COMPACTED THICKNESS).

2. ALTERNATE CONCRETE BASE: NONREINFORCED LEAN CONCRETE BASE.
a. COMPRESSIVE STRENGTH: 2,000 PSI (MAXIMUM).
b. BASE THICKNESS: AT LEAST 2 INCHES, BUT NOT MORE THAN 6 INCHES.

D. DRAINAGE STONE: CLEAN, ANGULAR, CRUSHED STONE OR GRANULAR FILL HAVING A FRICTION ANGLE OF 36 DEGREES AND MEETING THE GRADATION CONSISTENT WITH NO. 57 STONE AS DETERMINED IN ACCORDANCE WITH ASTM D448:

SIEVE SIZE	PERCENT PASSING
1-1/2 INCH	100
1 INCH	95 TO 100
1/2 INCH	25 TO 60
NO. 4	0 TO 10
NO. 8	0 TO 5

E. REINFORCED SOIL (BACKFILL WITHIN THE GEOGRID-REINFORCED ZONE): COHESIONLESS GRANULAR FILL HAVING A MINIMUM FRICTION ANGLE OF 32 DEGREES AND MEETING THE FOLLOWING GRADATION AS DETERMINED IN ACCORDANCE WITH ASTM D448:

SIEVE SIZE	PERCENT PASSING
1 INCH	100
3/4 INCH	75 TO 100
NO. 4	20 TO 100
NO. 40	0 TO 60
NO. 200	0 TO 12

1. SUITABLE REINFORCED SOILS ARE THOSE COHESIONLESS SOILS WITH LESS THAN 12 PERCENT PASSING THE NO. 200 SIEVE, MEETING THE ABOVE GRADATION AND:
a. REINFORCED BACKFILL SHALL BE FREE OF DEBRIS. GRADATION TESTING AND PLASTICITY INDEX (PI)/LIQUID LIMIT (LL) TESTING SHALL BE PERFORMED IN ACCORDANCE WITH ASTM D422 AND ASTM D4318, RESPECTIVELY, TO VERIFY COMPLIANCE.
b. THE MAXIMUM AGGREGATE SIZE SHALL BE LIMITED TO 1 INCH UNLESS FIELD TESTS HAVE BEEN PERFORMED TO EVALUATE POTENTIAL STRENGTH REDUCTIONS TO THE GEOGRID DESIGN DUE TO DAMAGE DURING CONSTRUCTION.
c. PERFORM SOIL STRENGTH TESTING PER ASTM D3080 TO VERIFY SOIL ANGLE OF INTERNAL FRICTION (PHI ANGLE) MEETS MINIMUM 32 DEGREES AS REQUIRED BY THIS DESIGN.
d. CONTRACTOR SHALL SUBMIT REINFORCED ZONE BACKFILL SAMPLES FOR LABORATORY TESTING BY THE OWNER'S GEOTECHNICAL ENGINEER TWO WEEKS PRIOR TO STOCKPILING ON-SITE.

F. LEAN CLAY AND/OR TOPSOIL: CLAYEY SOIL OR OTHER SIMILARLOW-PERMEABILITY MATERIAL WHICH WILL MINIMIZE PERCOLATION INTO THE DRAINAGE ZONE BEHIND THE WALL, AND WILL PROVIDE FOR VEGETATIVE GROWTH.
G. DRAINAGE PIPE: PERFORATED OR SLOTTED PVC OR CORRUGATED HDPE PIPE MANUFACTURED IN ACCORDANCE WITH ASTM D3034 AND/OR ASTM F405. THE PIPE MAY BE COVERED WITH A GEOTEXTILE TO FUNCTION AS A FILTER.
H. CONSTRUCTION ADHESIVE: EXTERIOR GRADE ADHESIVE AS RECOMMENDED BY THE RETAINING WALL UNIT MANUFACTURER.
I. GEOTEXTILE (FILTER FABRIC): US FABRICS 205NW, NON-WOVEN, 8 OZ/SY POLYPROPYLENE GEOTEXTILE.

PART 3 - EXECUTION

3.01 EXAMINATION

A. EXAMINE THE AREAS AND CONDITIONS UNDER WHICH THE RETAINING WALL SYSTEM IS TO BE ERECTED, AND NOTIFY THE CONTRACTOR IN WRITING OF CONDITIONS DETRIMENTAL TO THE PROPER AND TIMELY COMPLETION OF THE WORK. DO NOT PROCEED WITH THE WORK UNTIL UNSATISFACTORY CONDITIONS HAVE BEEN CORRECTED.
B. PROMPTLY NOTIFY THE WALL DESIGN ENGINEER OF SITE CONDITIONS WHICH MAY AFFECT WALL PERFORMANCE, SOIL CONDITIONS OBSERVED OTHER THAN THOSE ASSUMED, OR OTHER CONDITIONS THAT MAY REQUIRE A REEVALUATION OF THE WALL DESIGN.
C. VERIFY THE LOCATION OF EXISTING STRUCTURES AND UTILITIES PRIOR TO EXCAVATION.

3.02 PREPARATION

A. ENSURE SURROUNDING STRUCTURES ARE PROTECTED FROM THE EFFECTS OF WALL EXCAVATION.
B. EXCAVATION SUPPORT, IF REQUIRED, IS THE RESPONSIBILITY OF THE CONTRACTOR, INCLUDING THE STABILITY OF THE EXCAVATION AND IT'S INFLUENCE ON ADJACENT PROPERTIES AND STRUCTURES.

3.03 EXCAVATION

A. EXCAVATE TO THE LINES AND GRADES PROVIDED BY THE PROJECT CIVIL ENGINEER/SURVEYOR. OVER-EXCAVATION NOT APPROVED BY THE OWNER (OR OWNER'S REPRESENTATIVE) WILL NOT BE PAID FOR BY THE OWNER. REPLACEMENT OF THESE SOILS WITH COMPACTED FILL AND/OR WALL SYSTEM COMPONENTS WILL BE REQUIRED AT THE CONTRACTOR'S EXPENSE. USE CARE IN EXCAVATING TO PREVENT DISTURBANCE OF THE BASE BEYOND THE LINES SHOWN.

3.04 FOUNDATION PREPARATION

A. EXCAVATE FOUNDATION SOIL AS REQUIRED FOR FOOTING OR BASE DIMENSION SHOWN ON THE DRAWINGS OR AS DIRECTED BY THE PROJECT GEOTECHNICAL ENGINEER.
B. THE PROJECT GEOTECHNICAL ENGINEER WILL EXAMINE FOUNDATION SOIL TO ENSURE THAT THE ACTUAL FOUNDATION SOIL STRENGTH MEETS OR EXCEEDS THAT INDICATED ON THE DRAWINGS. REMOVE SOIL NOT MEETING THE REQUIRED STRENGTH. OVERSIZE RESULTING SPACE SUFFICIENTLY FROM THE FRONT OF THE BLOCK TO THE BACK OF THE REINFORCEMENT, AND BACKFILL WITH SUITABLE COMPACTED BACKFILL SOILS.
C. THE PROJECT GEOTECHNICAL ENGINEER WILL DETERMINE IF THE FOUNDATION SOILS WILL REQUIRE SPECIAL TREATMENT OR CORRECTION TO CONTROL TOTAL AND DIFFERENTIAL SETTLEMENT.
D. SCARIFY, MOISTURE CONDITION AND RECOMPACT EXPOSED FOUNDATION SOILS BENEATH BLOCK FACE TO MINIMUM OF 95 PERCENT OF STANDARD PROCTOR (ASTM D698) AT A MOISTURE WITHIN 2 PERCENT OF OPTIMUM.
E. FILL OVER-EXCAVATED AREAS WITH SUITABLE COMPACTED BACKFILL, AS RECOMMENDED BY THE PROJECT GEOTECHNICAL ENGINEER.
F. IF THE ABOVE SERVICES ARE BEYOND THE SCOPE OF THE PROJECT GEOTECHNICAL ENGINEER, KOWALSKI SHALL BE NOTIFIED IN A TIMELY MANNER TO PERFORM THESE SERVICES (FOR ADDITIONAL COST).

3.05 LEVELING PAD PREPARATION

A. PLACE BASE MATERIALS TO THE DEPTHS AND WIDTHS SHOWN ON THE DRAWINGS, UPON UNDISTURBED SOILS, OR FOUNDATION SOILS PREPARED IN ACCORDANCE WITH ARTICLE 3.04.
1. EXTEND THE LEVELING PAD LATERALLY AT LEAST 6 INCHES IN FRONT AND BEHIND THE LOWERMOST CONCRETE RETAINING WALL UNIT.
2. PROVIDE AGGREGATE BASE COMPACTED TO 6 INCHES THICK (MINIMUM).
3. THE CONTRACTOR MAY AT THEIR OPTION, PROVIDE A CONCRETE LEVELING PAD AS SPECIFIED IN SUBPARAGRAPH 2.01.C.2, IN LIEU OF THE AGGREGATE BASE.
4. WHERE A REINFORCED FOOTING IS REQUIRED BY LOCAL CODE OFFICIAL, PLACE FOOTING BELOW FROST DEPTH.

B. COMPACT AGGREGATE BASE MATERIAL TO PROVIDE A LEVEL, HARD SURFACE ON WHICH TO PLACE THE FIRST COURSE OF UNITS. WHERE MATERIAL TYPE IS SUFFICIENTLY "CLEAN," SUCH THAT A PROCTOR CURVE PER ASTM D1557 CANNOT BE ESTABLISHED, A PERFORMANCE OBSERVATION BASED INSPECTION MAY BE REQUIRED. THIS TYPE OF INSPECTION SHOULD INCLUDE THOROUGH NOTES RELATED TO INITIAL "TEST" OBSERVATIONS, THE TYPE OF EQUIPMENT USED, AND COMPACTION PATTERNS AND PASSES REQUIRED TO MEET ADEQUATE COMPACTION. THIS TYPE OF INSPECTION METHOD MAY BE USED FOR LEVELING PAD DEPTHS UP TO 18 INCHES ONLY.
C. PREPARE BASE MATERIALS TO ENSURE COMPLETE CONTACT WITH RETAINING WALL UNITS. GAPS ARE NOT ALLOWED.

3.06 ERECTION

A. GENERAL: ERECT UNITS IN ACCORDANCE WITH MANUFACTURER'S INSTRUCTIONS AND RECOMMENDATIONS, AND AS SPECIFIED HEREIN.
B. PLACE FIRST COURSE OF CONCRETE WALL UNITS ON THE PREPARED BASE MATERIAL. CHECK UNITS FOR LEVEL AND ALIGNMENT. MAINTAIN THE SAME ELEVATION AT THE TOP OF EACH UNIT WITHIN EACH SECTION OF THE BASE COURSE.
C. ENSURE THAT FOUNDATION UNITS ARE IN FULL CONTACT WITH COMPACTED LEVELING PAD.
D. PLACE CONCRETE WALL UNITS SIDE-BY-SIDE FOR FULL LENGTH OF WALL ALIGNMENT. ALIGNMENT MAY BE DONE BY USING A STRING LINE MEASURED FROM THE BACK OF THE BLOCK. GAPS ARE NOT ALLOWED BETWEEN THE FOUNDATION CONCRETE WALL UNITS.
E. PLACE 12 INCHES (MINIMUM) OF DRAINAGE AGGREGATE BETWEEN, AND DIRECTLY BEHIND THE CONCRETE WALL UNITS. FILL VOIDS IN RETAINING WALL UNITS WITH DRAINAGE AGGREGATE. PROVIDE A DRAINAGE ZONE BEHIND THE WALL UNITS TO WITHIN 12 INCHES OF THE FINAL GRADE. CAP THE BACKFILL AND DRAINAGE AGGREGATE ZONE WITH AT LEAST 12 INCHES OF IMPERVIOUS MATERIAL.
F. INSTALL DRAINAGE PIPE AT THE LOWEST ELEVATION POSSIBLE, TO MAINTAIN GRAVITY FLOW OF WATER TO OUTSIDE OF THE REINFORCED ZONE. SLOPE THE MAIN COLLECTION DRAINAGE PIPE, LOCATED JUST BEHIND THE CONCRETE RETAINING WALL UNITS, 2 PERCENT (MINIMUM) TO PROVIDE GRAVITY FLOW TO THE DAYLIGHTED AREAS. DAYLIGHT THE MAIN COLLECTION DRAINAGE PIPE TO AN APPROPRIATE LOCATION AWAY FROM THE WALL SYSTEM AT EACH LOW POINT OR AT 40 FOOT (MAXIMUM) INTERVALS ALONG THE WALL.
G. REMOVE EXCESS FILL FROM TOP OF UNITS AND INSTALL NEXT COURSE. ENSURE DRAINAGE AGGREGATE AND BACKFILL ARE COMPACTED BEFORE INSTALLATION OF NEXT COURSE.
H. CHECK EACH COURSE FOR LEVEL AND ALIGNMENT. ADJUST UNITS AS NECESSARY WITH REINFORCEMENT SHIMS TO MAINTAIN LEVEL, ALIGNMENT, AND SETBACK PRIOR TO PROCEEDING WITH EACH ADDITIONAL COURSE.

I. INSTALL EACH SUCCEEDING COURSE. BACKFILL AS EACH COURSE IS COMPLETED. PULL THE UNITS FORWARD UNTIL THE LOCATING SURFACE OF THE UNIT CONTACTS THE LOCATING SURFACE OF THE UNITS IN THE PRECEDING COURSE. INTERLOCK WALL SEGMENTS THAT MEET AT CORNERS BY OVERLAPPING SUCCESSIVE COURSES. ATTACH CONCRETE RETAINING WALL UNITS AT EXTERIOR CORNERS WITH ADHESIVE SPECIFIED.
J. INSTALL GEOSYNTHETIC REINFORCEMENT IN ACCORDANCE WITH GEOSYNTHETIC MANUFACTURER'S RECOMMENDATIONS AND THESE DRAWINGS.
1. ORIENT GEOSYNTHETIC REINFORCEMENT WITH THE HIGHEST STRENGTH AXIS PERPENDICULAR TO THE WALL FACE.
2. PRIOR TO GEOSYNTHETIC REINFORCEMENT PLACEMENT, PLACE THE BACKFILL AND COMPACT TO THE ELEVATION OF THE TOP OF THE WALL UNITS AT THE ELEVATION OF THE GEOSYNTHETIC REINFORCEMENT.
3. PLACE GEOSYNTHETIC REINFORCEMENT AT THE ELEVATIONS AND TO THE LENGTHS SHOWN ON THE DRAWINGS.
4. LAY GEOSYNTHETIC REINFORCEMENT HORIZONTALLY ON TOP OF THE CONCRETE RETAINING WALL UNITS AND THE COMPACTED BACKFILL SOILS. PLACE THE GEOSYNTHETIC REINFORCEMENT WITHIN ONE-HALF INCH OF THE FACE OF THE CONCRETE RETAINING WALL UNITS. PLACE THE NEXT COURSE OF CONCRETE RETAINING WALL UNITS ON TOP OF THE GEOSYNTHETIC REINFORCEMENT.
5. THE GEOSYNTHETIC REINFORCEMENT SHALL BE IN TENSION AND FREE FROM WRINKLES PRIOR TO PLACEMENT OF THE BACKFILL SOILS. PULL GEOSYNTHETIC REINFORCEMENT HAND-TAUT AND SECURE IN PLACE WITH STAPLES, STAKES, OR BY HAND-TENSIONING UNTIL THE GEOSYNTHETIC REINFORCEMENT IS COVERED BY 6 INCHES OF LOOSE FILL.
6. THE GEOSYNTHETIC REINFORCEMENTS SHALL BE CONTINUOUS THROUGHOUT THEIR EMBEDMENT LENGTHS. SPLICES IN THE GEOSYNTHETIC REINFORCEMENT STRENGTH DIRECTION ARE NOT ALLOWED.
7. DO NOT OPERATE TRACKED CONSTRUCTION EQUIPMENT DIRECTLY ON THE GEOSYNTHETIC REINFORCEMENT. AT LEAST 6 INCHES OF COMPACTED BACKFILL SOIL IS REQUIRED PRIOR TO OPERATION OF TRACKED VEHICLES OVER THE GEOSYNTHETIC REINFORCEMENT. KEEP TURNING OF TRACKED CONSTRUCTION EQUIPMENT TO A MINIMUM.
8. RUBBER-TIRED EQUIPMENT MAY PASS OVER THE GEOSYNTHETIC REINFORCEMENT AT SPEEDS OF LESS THAN 5 MILES PER HOUR. TURNING OF RUBBER-TIRED EQUIPMENT IS NOT ALLOWED ON THE GEOSYNTHETIC REINFORCEMENT.

3.07 BACKFILL PLACEMENT

A. PLACE REINFORCED BACKFILL, SPREAD AND COMPACT IN A MANNER THAT WILL MINIMIZE SLACK IN THE REINFORCEMENT.
B. PLACE FILL WITHIN THE REINFORCED ZONE AND COMPACT IN LIFTS NOT EXCEEDING 6 TO 8 INCHES (LOOSE THICKNESS) WHERE HAND-OPERATED COMPACTION EQUIPMENT IS USED, AND NOT EXCEEDING 12 INCHES (LOOSE THICKNESS) WHERE HEAVY, SELF-PROPELLED COMPACTION EQUIPMENT IS USED.
1. ONLY LIGHTWEIGHT HAND-OPERATED COMPACTION EQUIPMENT IS ALLOWED WITHIN 4 FEET OF THE BACK OF THE RETAINING WALL UNITS. IF THE SPECIFIED COMPACTION CANNOT BE ACHIEVED WITHIN 4 FEET OF THE BACK OF THE RETAINING WALL UNITS, REPLACE THE REINFORCED SOIL IN THIS ZONE WITH DRAINAGE AGGREGATE MATERIAL AND PLACE THE MATERIAL IN THINNER LIFTS.

C. MINIMUM COMPACTION REQUIREMENTS FOR FILL PLACED IN THE REINFORCED ZONE
1. COMPACT TO 95 PERCENT OF THE SOIL'S STANDARD PROCTOR MAXIMUM DRY DENSITY (ASTM D698) FOR THE ENTIRE WALL HEIGHT.
2. UTILITY TRENCH BACKFILL: COMPACT UTILITY TRENCH BACKFILL IN OR BELOW THE REINFORCED SOIL ZONE TO 98 PERCENT OF THE SOIL'S STANDARD PROCTOR MAXIMUM DRY DENSITY (ASTM D698), OR AS RECOMMENDED BY THE PROJECT GEOTECHNICAL ENGINEER, WHICHEVER IS GREATER.
a. UTILITIES MUST BE PROPERLY DESIGNED (BY OTHERS) TO WITHSTAND ALL FORCES FROM THE RETAINING WALL UNITS, REINFORCED SOIL MASS, AND SURCHARGE LOADS, IF ANY.
b. ADDITIONALLY, UTILITY TRENCH BACKFILL MUST BE CAPABLE OF WALL SUPPORT.
3. MOISTURE CONTENT: GENERALLY WITHIN 2 PERCENTAGE POINTS OF THE OPTIMUM MOISTURE CONTENT FOR ALL WALL HEIGHTS, AS REQUIRED TO ACHIEVE MINIMUM COMPACTION BASED ON MATERIAL TYPE AND LABORATORY PROCTOR CURVE DATA.
4. THESE SPECIFICATIONS MAY BE CHANGED BASED ON RECOMMENDATIONS BY KOWALSKI ONLY.
a. IF CHANGES ARE REQUIRED, THE CONTRACT SUM WILL BE ADJUSTED BY WRITTEN CHANGE ORDER.

D. AT THE END OF EACH DAY'S OPERATION, SLOPE THE LAST LEVEL OF COMPACTED BACKFILL AWAY FROM THE INTERIOR (CONCEALED) FACE OF THE WALL TO DIRECT SURFACE WATER RUNOFF AWAY FROM THE WALL FACE.
1. THE GENERAL CONTRACTOR IS RESPONSIBLE FOR ENSURING THAT THE FINISHED SITE DRAINAGE IS DIRECTED AWAY FROM THE RETAINING WALL SYSTEM.
2. IN ADDITION, THE GENERAL CONTRACTOR IS RESPONSIBLE FOR ENSURING THAT SURFACE WATER RUNOFF FROM ADJACENT CONSTRUCTION AREAS IS NOT ALLOWED TO ENTER THE RETAINING WALL AREA OF THE CONSTRUCTION SITE.

E. REFER TO ARTICLE 3.10 FOR COMPACTION TESTING AND CONSTRUCTION INSPECTION REQUIREMENTS.

3.08 CAP UNIT INSTALLATION

A. INSTALL CAP UNITS PER MANUFACTURER SPECIFICATIONS AND SECURE CAPS TO UPPERMOST BLOCK USING MANUFACTURER'S APPROVED ADHESIVE.

3.09 SITE CONSTRUCTION TOLERANCES

A. SITE CONSTRUCTION TOLERANCES
1. VERTICAL ALIGNMENT: PLUS OR MINUS 1-1/4 INCHES OVER ANY 10-FOOT DISTANCE, WITH A MAXIMUM DIFFERENTIAL OF 3 INCHES OVER THE LENGTH OF THE WALL.
2. HORIZONTAL LOCATION CONTROL FROM GRADING PLAN
a. STRAIGHT LINES: PLUS OR MINUS 1-1/4 INCHES OVER ANY 10-FOOT DISTANCE, WITH A MAXIMUM DIFFERENTIAL OF 3 INCHES OVER THE LENGTH OF THE WALL.
b. CORNER AND RADIUS LOCATIONS: PLUS OR MINUS 12 INCHES.
c. CURVES AND SERPENTINE RADII: PLUS OR MINUS 2 FEET.
3. IMMEDIATE POST CONSTRUCTION WALL BATTER: WITHIN 2 DEGREES OF THE DESIGN BATTER OF THE CONCRETE RETAINING WALL UNITS.
4. BULGING: PLUS OR MINUS 1-1/4 INCHES OVER ANY 10-FOOT DISTANCE.

3.10 FIELD QUALITY CONTROL

A. INSTALLER IS RESPONSIBLE FOR QUALITY CONTROL OF INSTALLATION OF SYSTEM COMPONENTS. OWNER TO EMPLOY A QUALIFIED INDEPENDENT THIRD PARTY TESTING FIRM (PROJECT GEOTECHNICAL ENGINEER) TO VERIFY THE CORRECT INSTALLATION OF SYSTEM COMPONENTS IN ACCORDANCE WITH THESE SPECIFICATIONS AND THE DRAWINGS.
B. THE OWNER, AT THEIR EXPENSE, WILL RETAIN A QUALIFIED PROFESSIONAL TO PERFORM QUALITY ASSURANCE CHECKS OF THE INSTALLER'S WORK.
C. WORK WHICH DOES NOT MEET THESE SPECIFICATIONS OR THE REQUIREMENTS SHOWN ON THE DRAWINGS SHALL BE CORRECTED AND BROUGHT INTO CONFORMANCE AT THE INSTALLER'S EXPENSE.
D. THE PROJECT GEOTECHNICAL ENGINEER IS TO PERFORM COMPACTION TESTING OF THE REINFORCED BACKFILL PLACED AND COMPACTED IN THE REINFORCED BACKFILL ZONE.
1. TESTING FREQUENCY
a. A MINIMUM OF ONE TEST FOR EVERY 1,000 SQUARE FEET OF BACKFILL, PER LIFT OF SOIL PLACED AND COMPACTED.
b. VARY COMPACTION TEST LOCATIONS TO COVER THE ENTIRE AREA OF THE REINFORCED SOIL ZONE, INCLUDING THE AREA COMPACTED BY THE HAND-OPERATED COMPACTION EQUIPMENT.
c. PERFORM GRADATION AND ATTERBERG LIMITS TESTING PRIOR TO CONSTRUCTION AND AT REGULAR INTERVALS DURING CONSTRUCTION (BUT NOT LESS THAN 3 OF EACH TEST) PER ASTM D422 AND ASTM D4318 TO VERIFY BACKFILL TYPES MEET MINIMUM PROJECT REQUIREMENTS.
d. PERFORM SOIL SHEAR STRENGTH TESTS PER ASTM D3080 TO VERIFY SOIL ANGLE OF INTERNAL FRICTION (PHI ANGLE) FOR REINFORCED BACKFILL MEETS PROJECT SPECIFICATIONS. AT LEAST 1 TEST TO BE PERFORMED PRIOR TO STOCKPILING MATERIAL FOR USE IN THE REINFORCED ZONE. ADDITIONAL TESTS WILL BE REQUIRED IF MATERIAL TYPE OR SOURCE IS CHANGED.
E. TESTING AND INSPECTION REPORTS SHALL BE PROVIDED TO KOWALSKI ON A WEEKLY BASIS AT A MINIMUM. REPORTS SHOULD ADDRESS NOT ONLY TEST RESULTS BUT VERIFICATION OF MATERIAL TYPES AND CONSTRUCTION DETAILS INCLUDING GRID LENGTHS, LOCATIONS, AND INSTALLATION PROCEDURES. ANY DISCREPANCIES FROM THESE PLANS SHALL BE REPORTED TO KOWALSKI IMMEDIATELY.

3.11 ADJUSTING AND CLEANING

A. REPLACE DAMAGED UNITS WITH NEW UNITS AS THE WORK PROGRESSES.
B. REMOVE DEBRIS CAUSED BY WALL CONSTRUCTION AND LEAVE ADJACENT PAVED AREAS BROOM CLEAN.

3.12 SPECIAL PROVISIONS

A. SURFACE WATER SHALL BE IMPEDED FROM ENTERING THE RETAINING WALL AT ALL LOCATIONS.
B. PROJECT GEOTECHNICAL ENGINEER IS TO PERFORM GLOBAL STABILITY ANALYSIS. AN ASSESSMENT OF GLOBAL STABILITY WAS PERFORMED BY KOWALSKI. THIS ASSESSMENT SHOWED FACTORS OF SAFETY IN EXCESS OF 1.50 FOR THE MODELED CONDITIONS. THIS ASSESSMENT SHALL BE PROVIDED TO THE PROJECT GEOTECHNICAL ENGINEER FOR REVIEW AND APPROVAL PRIOR TO WALL CONSTRUCTION.

REV	DATE	DESCRIPTION

PRELIMINARY NOT FOR CONSTRUCTION

SIGNATURE DATE:

JOSEPH W. KOWALSKI, P.E.
3710 Section Road
Cincinnati, Ohio 45236
Phone 513.403.5657
www.RetainingWallExpert.com

© COPYRIGHT, 2019, JOSEPH W. KOWALSKI. ALL RIGHTS RESERVED.

TITLE: MSE RETAINING WALL SPECIFICATIONS

FOR: Costco Wholesale

SCALE: As Noted

PROJECT: Costco– South Windsor

SHEET: 18064-R.13

LOCATION: South Windsor, Connecticut

CAD FILE: D:\Google Drive\WORKS\2018\18064-Costco-SWindsor\CTWall Designs\Costco-SWindsorCT-092020.dwg LAYOUT: MSE WALL SPECS PLOTTED: 9/25/2020 4:18 PM BY: JW

SPECIFICATIONS AND CONSTRUCTION NOTES FOR GRAVITY RETAINING WALLS USING RECON™ WALL BLOCKS WITH NO GEOGRID REINFORCEMENT (SECTION 32 32 15)

PART 1 - GENERAL

1.01 SUmmARY

A. THIS SECTION INCLUDES FURNISHING ALL MATERIALS AND LABOR REQUIRED FOR THE DESIGN AND CONSTRUCTION OF A PRECAST CONCRETE MODULAR BLOCK (PMB) RETAINING WALL WITHOUT GEOSYNTHETIC REINFORCEMENT. PRECAST MODULAR BLOCK RETAINING WALL BLOCKS UNDER THIS SECTION SHALL BE CAST UTILIZING A WET-CAST CONCRETE MIX AND EXHIBIT A FINAL HANDLING WEIGHT IN EXCESS OF 1,000 POUNDS (450 KG) PER UNIT.

B. SCOPE OF WORK: THE WORK SHALL CONSIST OF FURNISHING MATERIALS, LABOR, EQUIPMENT AND SUPERVISION FOR THE CONSTRUCTION OF A PRECAST MODULAR BLOCK (PMB) RETAINING WALL STRUCTURE IN ACCORDANCE WITH THE REQUIREMENTS OF THIS SECTION AND IN ACCEPTABLE CONFORMITY WITH THE LINES, GRADES, DESIGN AND DIMENSIONS SHOWN IN THE PROJECT SITE PLANS.

C. DRAWINGS AND GENERAL PROVISIONS OF THE CONTRACT, INCLUDING GENERAL AND SUPPLEMENTARY CONDITIONS AND DIVISION 31, DIVISION 32 AND DIVISION 33 ALSO APPLY TO THIS SECTION.

1.02 REFERENCES

A. WHERE THE SPECIFICATION AND REFERENCE DOCUMENTS CONFLICT, THE OWNER'S DESIGNATED REPRESENTATIVE WILL MAKE THE FINAL DETERMINATION OF THE APPLICABLE DOCUMENT.

B. DEFINITIONS:
1. PRECAST MODULAR BLOCK (PMB) UNIT - MACHINE-PLACED, "WET CAST" CONCRETE MODULAR BLOCK RETAINING WALL FACING UNIT.
2. GEOTEXTILE - A GEOSYNTHETIC FABRIC MANUFACTURED FOR USE AS A SEPARATION AND FILTRATION MEDIUM BETWEEN DISSIMILAR SOIL MATERIALS.
3. DRAINAGE STONE - CLEAN, CRUSHED STONE PLACED WITHIN AND IMMEDIATELY BEHIND THE PRECAST MODULAR BLOCK UNITS TO FACILITATE DRAINAGE AND REDUCE COMPACTION REQUIREMENTS IMMEDIATELY ADJACENT TO AND BEHIND THE PRECAST MODULAR BLOCK UNITS.
4. UNIT CORE FILL - CLEAN, CRUSHED STONE PLACED WITHIN THE HOLLOW VERTICAL CORE OF A PRECAST MODULAR BLOCK UNIT. TYPICALLY, THE SAME MATERIAL USED FOR DRAINAGE STONE AS DEFINED ABOVE.
5. FOUNDATION ZONE - SOIL ZONE IMMEDIATELY BENEATH THE LEVELING PAD.
6. RETAINED ZONE - SOIL ZONE IMMEDIATELY BEHIND THE DRAINAGE STONE AND WALL INFILL FOR WALL SECTIONS DESIGNED AS MODULAR GRAVITY STRUCTURES.
7. LEVELING PAD - HARD, FLAT SURFACE UPON WHICH THE BOTTOM COURSE OF PRECAST MODULAR BLOCKS ARE PLACED. THE LEVELING PAD MAY BE CONSTRUCTED WITH CRUSHED STONE OR CAST-IN-PLACE CONCRETE. A LEVELING PAD IS NOT A STRUCTURAL FOOTING.
8. WALL INFILL - THE FILL MATERIAL PLACED AND COMPACTED BETWEEN THE DRAINAGE STONE AND THE EXCAVATED SOIL FACE IN RETAINING WALL SECTIONS DESIGNED AS MODULAR GRAVITY STRUCTURES. NOTE: FOR CUT WALLS THE WALL INFILL SOIL IS USUALLY 100% DRAINAGE STONE.

C. REFERENCE STANDARDS
1. DESIGN
   a. AASHTO LRFD BRIDGE DESIGN SPECIFICATIONS, 7TH EDITION, 2014.
   b. MINIMUM DESIGN LOADS FOR BUILDINGS AND OTHER STRUCTURES - ASCE/SEI 7-10.
   c. INTERNATIONAL BUILDING CODE, 2012 EDITION.
   d. DESIGN MANUAL FOR SEGMENTAL RETAINING WALLS, NATIONAL CONCRETE MASONRY ASSOCIATION, 3RD EDITION, 2010
2. PRECAST MODULAR BLOCK UNITS
   a. ASTM C94 - STANDARD SPECIFICATION FOR READY-MIXED CONCRETE.
   b. ASTM C136 - STANDARD TEST METHOD FOR SIEVE ANALYSIS OF FINE AND COARSE AGGREGATES.
   c. ASTM C143 - STANDARD TEST METHOD FOR SLUMP OF HYDRAULIC-CEMENT CONCRETE.
   d. ASTM C260 - STANDARD SPECIFICATION FOR AIR-ENTRAINING ADMIXTURES FOR CONCRETE.
   e. ASTM C494 - STANDARD SPECIFICATION FOR CHEMICAL ADMIXTURES FOR CONCRETE.
   f. ASTM C666 - STANDARD TEST METHOD FOR CONCRETE RESISTANCE TO RAPID FREEZING AND THAWING.
   g. ASTM C1611 - STANDARD TEST METHOD FOR SLUMP FLOW OF SELF-CONSOLIDATING CONCRETE.
   h. ASTM C1776 - STANDARD SPECIFICATION FOR WET-CAST PRECAST MODULAR RETAINING WALL UNITS.
   i. ASTM D6916 - STANDARD TEST METHOD FOR DETERMINING SHEAR STRENGTH BETWEEN SEGMENTAL CONCRETE UNITS (MODULAR CONCRETE BLOCKS).
3. GEOSYNTHETICS
   a. AASHTO M 288 - GEOTEXTILE SPECIFICATION FOR HIGHWAY APPLICATIONS.
   b. ASTM D3786 - STANDARD TEST METHOD FOR BURSTING STRENGTH OF TEXTILE FABRICS DIAPHRAGM BURSTING STRENGTH TESTER METHOD.
   c. ASTM D4354 - STANDARD PRACTICE FOR SAMPLING OF GEOSYNTHETICS FOR TESTING.
   d. ASTM D4355 - STANDARD TEST METHOD FOR DETERIORATION OF GEOTEXTILES
   e. ASTM D4491 - STANDARD TEST METHODS FOR WATER PERMEABILITY OF GEOTEXTILES BY PERMITTIVITY.
   f. ASTM D4533 - STANDARD TEST METHOD FOR TRAPEZOID TEARING STRENGTH OF GEOTEXTILES.
   g. ASTM D4595 - STANDARD TEST METHOD FOR TENSILE PROPERTIES OF GEOTEXTILES BY THE WIDE-WIDTH STRIP METHOD.
   h. ASTM D4632 - STANDARD TEST METHOD FOR GRAB BREAKING LOAD AND ELONGATION OF GEOTEXTILES.
   i. ASTM D4751 - STANDARD TEST METHOD FOR DETERMINING APPARENT OPENING SIZE OF A GEOTEXTILE.
   j. ASTM D4759 - STANDARD PRACTICE FOR DETERMINING SPECIFICATION CONFORMANCE OF GEOSYNTHETICS.
   k. ASTM D4833 - STANDARD TEST METHOD FOR INDEX PUNCTURE RESISTANCE OF GEOMEMBRANES AND RELATED PRODUCTS.
   l. ASTM D4873 - STANDARD GUIDE FOR IDENTIFICATION, STORAGE, AND HANDLING OF GEOSYNTHETIC ROLLS AND SAMPLES.
   m. ASTM D6241 - STANDARD TEST METHOD FOR THE STATIC PUNCTURE STRENGTH OF GEOTEXTILES AND GEOTEXTILE-RELATED PRODUCTS USING A 50-mm PROBE.
4. SOILS
   a. AASHTO M 145 - AASHTO SOIL CLASSIFICATION SYSTEM.
   b. AASHTO T 104 - STANDARD METHOD OF TEST FOR SOUNDNESS OF AGGREGATE BY USE OF SODIUM SULFATE OR MAGNESIUM SULFATE.
   c. AASHTO T 267 - STANDARD METHOD OF TEST FOR DETERMINATION OF ORGANIC CONTENT IN SOILS BY LOSS OF IGNITION.
   d. ASTM C33 - STANDARD SPECIFICATION FOR CONCRETE AGGREGATES.
   e. ASTM D422 - STANDARD TEST METHOD FOR PARTICLE-SIZE ANALYSIS OF SOILS.
   f. ASTM D1140 - STANDARD TEST METHOD FOR AMOUNT OF MATERIAL IN SOILS FINER THAN THE NO. 200 (75-µm) SIEVE.
   g. ASTM D2487 - STANDARD PRACTICE FOR CLASSIFICATION OF SOILS FOR ENGINEERING PURPOSES (UNIFIED SOIL CLASSIFICATION SYSTEM).
   h. ASTM D2488 - STANDARD PRACTICE FOR DESCRIPTION AND IDENTIFICATION OF SOILS (VISUAL-MANUAL PROCEDURE).
   i. ASTM D3080 - STANDARD TEST METHOD FOR DIRECT SHEAR TEST OF SOILS UNDER CONSOLIDATED DRAINED CONDITIONS.
   j. ASTM D4254 - STANDARD TEST METHOD FOR MINIMUM INDEX DENSITY AND UNIT WEIGHT OF SOILS AND CALCULATION OF RELATIVE DENSITY.
   k. ASTM D4318 - STANDARD TEST METHOD FOR LIQUID LIMIT, PLASTIC LIMIT, AND PLASTICITY INDEX OF SOILS.
   l. ASTM D4767- TEST METHOD FOR CONSOLIDATED-UNDRAINED TRIAXIAL COMPRESSION TEST FOR COHESIVE SOILS.
   m. ASTM D4972 - STANDARD TEST METHOD FOR PH OF SOILS.
   n. ASTM D6938 - STANDARD TEST METHOD FOR IN-PLACE DENSITY AND WATER CONTENT OF SOIL AND AGGREGATE BY NUCLEAR METHODS (SHALLOW DEPTH).
5. DRAINAGE PIPE
   a. ASTM D3034 - STANDARD SPECIFICATION FOR TYPE PSM POLY (VINYL CHLORIDE) (PVC) SEWER PIPE AND FITTINGS.
   b. ASTM F2648 - STANDARD SPECIFICATION FOR 2 TO 60 INCH [50 TO 1500 mm] ANNULAR CORRUGATED PROFILE WALL POLYETHYLENE (PE) PIPE AND FITTINGS FOR LAND DRAINAGE APPLICATIONS.

1.03 ADMINISTRATIVE REQUIREMENTS

A. PRECONSTRUCTION MEETING. AS DIRECTED BY THE OWNER, THE GENERAL CONTRACTOR SHALL SCHEDULE A PRECONSTRUCTION MEETING AT THE PROJECT SITE PRIOR TO COmmENCEMENT OF RETAINING WALL CONSTRUCTION. PARTICIPATION IN THE PRECONSTRUCTION MEETING SHALL BE REQUIRED OF THE GENERAL CONTRACTOR, RETAINING WALL DESIGN ENGINEER, RETAINING WALL INSTALLATION CONTRACTOR, GRADING CONTRACTOR AND INSPECTION ENGINEER. THE GENERAL CONTRACTOR SHALL PROVIDE NOTIFICATION TO ALL PARTIES AT LEAST 10 CALENDAR DAYS PRIOR TO THE MEETING.

1. PRECONSTRUCTION MEETING AGENDA:
   a. THE RETAINING WALL DESIGN ENGINEER SHALL EXPLAIN ALL ASPECTS OF THE RETAINING WALL CONSTRUCTION DRAWINGS.
   b. THE RETAINING WALL DESIGN ENGINEER SHALL EXPLAIN THE REQUIRED BEARING CAPACITY OF SOIL BELOW THE RETAINING WALL STRUCTURE AND THE SHEAR STRENGTH OF IN-SITU SOILS ASSUMED IN THE RETAINING WALL DESIGN TO THE INSPECTION ENGINEER.
   c. THE RETAINING WALL DESIGN ENGINEER SHALL EXPLAIN THE REQUIRED SHEAR STRENGTH OF FILL SOIL IN THE RETAINED AND FOUNDATION ZONES OF THE RETAINING WALL TO THE INSPECTION ENGINEER.
   d. THE RETAINING WALL DESIGN ENGINEER SHALL EXPLAIN ANY MEASURES REQUIRED FOR COORDINATION OF THE INSTALLATION OF UTILITIES OR OTHER OBSTRUCTIONS IN THE RETAINED FILL ZONES OF THE RETAINING WALL.
   e. THE RETAINING WALL INSTALLATION CONTRACTOR SHALL EXPLAIN ALL EXCAVATION NEEDS, SITE ACCESS AND MATERIAL STAGING AREA REQUIREMENTS TO THE GENERAL CONTRACTOR AND GRADING CONTRACTOR.

1.04 SUBMITTALS

A. PRODUCT DATA. AT LEAST 14 DAYS PRIOR TO CONSTRUCTION, THE GENERAL CONTRACTOR SHALL SUBMIT A MINIMUM OF SIX (6) COPIES OF THE RETAINING WALL PRODUCT SUBMITTAL PACKAGE TO THE OWNER'S REPRESENTATIVE FOR REVIEW AND APPROVAL. THE SUBMITTAL PACKAGE SHALL INCLUDE TECHNICAL SPECIFICATIONS AND PRODUCT DATA FROM THE MANUFACTURER FOR THE FOLLOWING:
1. PRECAST MODULAR BLOCK SYSTEM BROCHURE
2. PRECAST MODULAR BLOCK CONCRETE TEST RESULTS SPECIFIED IN PARAGRAPH 2.01, SUBPARAGRAPH B OF THIS SECTION AS FOLLOWS:
   a. 28-DAY COMPRESSIVE STRENGTH
   b. AIR CONTENT
   c. SLUMP OR SLUMP FLOW (AS APPLICABLE)
3. DRAINAGE PIPE
4. GEOTEXTILE

B. INSTALLER QUALIFICATION DATA. AT LEAST 14 DAYS PRIOR TO CONSTRUCTION, THE GENERAL CONTRACTOR SHALL SUBMIT THE QUALIFICATIONS OF THE BUSINESS ENTITY RESPONSIBLE FOR INSTALLATION OF THE RETAINING WALL, THE RETAINING WALL INSTALLATION CONTRACTOR, PER PARAGRAPH 1.07, SUBPARAGRAPH A OF THIS SECTION.

1.05 QUALITY CONTROL

A. THE OWNER'S REPRESENTATIVE SHALL REVIEW ALL SUBMITTALS FOR MATERIALS, DESIGN, RETAINING WALL DESIGN ENGINEER QUALIFICATIONS AND THE RETAINING WALL INSTALLATION CONTRACTOR QUALIFICATIONS.

B. THE OWNER'S REPRESENTATIVE SHALL RETAIN THE SERVICES OF AN INSPECTION ENGINEER WHO IS EXPERIENCED WITH THE CONSTRUCTION OF PRECAST MODULAR BLOCK RETAINING WALL STRUCTURES TO PERFORM INSPECTION AND TESTING. THE COST OF INSPECTION SHALL BE THE RESPONSIBILITY OF THE OWNER. INSPECTION SHALL BE CONTINUOUS THROUGHOUT THE CONSTRUCTION OF THE RETAINING WALLS.

C. THE INSPECTION ENGINEER SHALL PERFORM THE FOLLOWING DUTIES:
1. INSPECT THE CONSTRUCTION OF THE PRECAST MODULAR BLOCK STRUCTURE FOR CONFORMANCE WITH CONSTRUCTION SHOP DRAWINGS AND THE REQUIREMENTS OF THIS SPECIFICATION.
2. VERIFY THAT SOIL OR AGGREGATE FILL PLACED AND COMPACTED IN THE RETAINED AND FOUNDATION ZONES OF THE RETAINING WALL CONFORMS WITH PARAGRAPHS 2.04 AND 2.05 OF THIS SECTION AND EXHIBITS THE SHEAR STRENGTH PARAMETERS SPECIFIED BY THE RETAINING WALL DESIGN ENGINEER.
3. VERIFY THAT THE SHEAR STRENGTH OF THE IN-SITU SOIL ASSUMED BY THE RETAINING WALL DESIGN ENGINEER IS APPROPRIATE.
4. INSPECT AND DOCUMENT SOIL COMPACTION IN ACCORDANCE WITH THESE SPECIFICATIONS:
   a. REQUIRED DRY UNIT WEIGHT
   b. ACTUAL DRY UNIT WEIGHT
   c. ALLOWABLE MOISTURE CONTENT
   d. ACTUAL MOISTURE CONTENT
   e. PASS/FAIL ASSESSMENT
   f. TEST LOCATION - WALL STATION NUMBER
   g. TEST ELEVATION
   h. DISTANCE OF TEST LOCATION BEHIND THE WALL FACE
5. VERIFY THAT ALL EXCAVATED SLOPES IN THE VICINITY OF THE RETAINING WALL ARE BENCH-CUT AS DIRECTED BY THE PROJECT GEOTECHNICAL ENGINEER.
6. NOTIFY THE RETAINING WALL INSTALLATION CONTRACTOR OF ANY DEFICIENCIES IN THE RETAINING WALL CONSTRUCTION AND PROVIDE THE RETAINING WALL INSTALLATION CONTRACTOR A REASONABLE OPPORTUNITY TO CORRECT THE DEFICIENCY.
7. NOTIFY THE GENERAL CONTRACTOR, OWNER AND RETAINING WALL DESIGN ENGINEER OF ANY CONSTRUCTION DEFICIENCIES THAT HAVE NOT BEEN CORRECTED TIMELY.
8. DOCUMENT ALL INSPECTION RESULTS.
9. TEST COMPACTED DENSITY AND MOISTURE CONTENT OF THE RETAINED BACKFILL WITH THE FOLLOWING FREQUENCY:
   a. AT LEAST ONCE EVERY 1,000 SQUARE FEET (90 SQUARE METERS) (IN PLAN) PER 9-INCH (230 mm) VERTICAL LIFT, AND
   b. AT LEAST ONCE PER EVERY 18 INCHES (460 mm) OF VERTICAL WALL CONSTRUCTION.

D. THE OWNER'S ENGAGEMENT OF THE INSPECTION ENGINEER DOES NOT RELIEVE THE RETAINING WALL INSTALLATION CONTRACTOR OF RESPONSIBILITY TO CONSTRUCT THE PROPOSED RETAINING WALL IN ACCORDANCE WITH THE APPROVED CONSTRUCTION SHOP DRAWINGS AND THESE SPECIFICATIONS.

E. THE RETAINING WALL INSTALLATION CONTRACTOR SHALL INSPECT THE ON-SITE GRADES AND EXCAVATIONS PRIOR TO CONSTRUCTION AND NOTIFY THE RETAINING WALL DESIGN ENGINEER AND GENERAL CONTRACTOR IF ON-SITE CONDITIONS DIFFER FROM THE ELEVATIONS AND GRADING CONDITIONS DEPICTED IN THE RETAINING WALL CONSTRUCTION SHOP DRAWINGS.

1.06 DELIVERY, STORAGE AND HANDLING

A. THE RETAINING WALL INSTALLATION CONTRACTOR SHALL INSPECT THE MATERIALS UPON DELIVERY TO ENSURE THAT THE PROPER TYPE, GRADE AND COLOR OF MATERIALS HAVE BEEN DELIVERED.

B. THE RETAINING WALL INSTALLATION CONTRACTOR SHALL STORE AND HANDLE ALL MATERIALS IN ACCORDANCE WITH THE MANUFACTURER'S RECOmmENDATIONS AS SPECIFIED HEREIN AND IN A MANNER THAT PREVENTS DETERIORATION OR DAMAGE DUE TO MOISTURE, TEMPERATURE CHANGES, CONTAMINANTS, CORROSION, BREAKING, CHIPPING, UV EXPOSURE OR OTHER CAUSES. DAMAGED MATERIALS SHALL NOT BE INCORPORATED INTO THE WORK.

C. GEOSYNTHETICS
1. ALL GEOSYNTHETIC MATERIALS SHALL BE HANDLED IN ACCORDANCE WITH ASTM D4873. THE MATERIALS SHOULD BE STORED OFF THE GROUND AND PROTECTED FROM PRECIPITATION, SUNLIGHT, DIRT AND PHYSICAL DAMAGE.

D. PRECAST MODULAR BLOCKS
1. PRECAST MODULAR BLOCKS SHALL BE STORED IN AN AREA WITH POSITIVE DRAINAGE AWAY FROM THE BLOCKS. BE CAREFUL TO PROTECT THE BLOCK FROM MUD AND EXCESSIVE CHIPPING AND BREAKAGE. PRECAST MODULAR BLOCKS SHALL NOT BE STACKED MORE THAN THREE (3) UNITS HIGH IN THE STORAGE AREA.

E. DRAINAGE STONE AND BACKFILL STOCKPILES
1. DRAINAGE STONE OR BACKFILL MATERIAL SHALL NOT BE PILED OVER UNSTABLE SLOPES OR AREAS OF THE PROJECT SITE WITH BURIED UTILITIES.
2. DRAINAGE STONE MATERIAL SHALL NOT BE STAGED WHERE IT MAY BECOME MIXED WITH OR CONTAMINATED BY POOR DRAINING FINE-GRAINED SOILS SUCH AS CLAY OR SILT.

PART 2 - MATERIALS

2.01 PRECAST MODULAR BLOCK RETAINING WALL UNITS

A. ALL UNITS SHALL BE WET-CAST PRECAST MODULAR RETAINING WALL UNITS CONFORMING TO ASTM C1776.

B. ALL UNITS FOR THE PROJECT SHALL BE OBTAINED FROM THE SAME MANUFACTURER. THE MANUFACTURER SHALL BE LICENSED AND AUTHORIZED TO PRODUCE THE RETAINING WALL UNITS BY THE PRECAST MODULAR BLOCK SYSTEM PATENT HOLDER/LICENSOR AND SHALL DOCUMENT COMPLIANCE WITH THE PUBLISHED QUALITY CONTROL STANDARDS OF THE PROPRIETARY PRECAST MODULAR BLOCK SYSTEM LICENSOR FOR THE PREVIOUS THREE (3) YEARS, OR THE TOTAL TIME THE MANUFACTURER HAS BEEN LICENSED, WHICHEVER IS LESS.

C. CONCRETE USED IN THE PRODUCTION OF THE PRECAST MODULAR BLOCK UNITS SHALL BE FIRST-PURPOSE, FRESH CONCRETE. IT SHALL NOT CONSIST OF RETURNED, RECONSTITUTED, SURPLUS OR WASTE CONCRETE. IT SHALL BE AN ORIGINAL PRODUCTION MIX MEETING THE REQUIREMENTS OF ASTM C94 AND EXHIBIT THE FOLLOWING:
1. MINIMUM 28-DAY COMPRESSIVE STRENGTH OF 4,000 PSI (27.6 MPa).
2. SHALL BE FREE OF WATER SOLUBLE CHLORIDES AND CHLORIDE BASED ACCELERATOR ADMIXTURES.
3. 6% +/- 1½% AIR-ENTRAINMENT IN CONFORMANCE ASTM C94.
4. MAXIMUM SLUMP OF 5 INCHES +/- 1½ INCHES (125 mm +/- 40 mm) PER ASTM C143 FOR CONVENTIONAL CONCRETE MIX DESIGNS.
5. SLUMP FLOW FOR SELF-CONSOLIDATING CONCRETE (SCC) MIX DESIGNS SHALL BE BETWEEN 18 INCHES AND 32 INCHES (450 mm AND 800 mm) AS TESTED IN ACCORDANCE WITH ASTM C1611.

D. EACH CONCRETE BLOCK SHALL BE CAST IN A SINGLE CONTINUOUS POUR WITHOUT COLD JOINTS. WITH THE EXCEPTION OF HALF-BLOCK UNITS, CORNER UNITS AND OTHER SPECIAL APPLICATION UNITS, THE PRECAST MODULAR BLOCK UNITS SHALL CONFORM TO THE NOMINAL DIMENSIONS LISTED IN THE TABLE BELOW AND BE PRODUCED TO THE DIMENSIONAL TOLERANCES SHOWN.

BLOCK TYPE	DIMENSION	NOMINAL VALUE	TOLERANCE
24" (710 mm)	BLOCK HEIGHT	16" (406 mm)	+/- 3/16" (5 mm)
	LENGTH	48" (1219 mm)	+/- 1/2" (13 mm)
	WIDTH*	24" (610 mm)	+/- 1/2" (13 mm)
39" (1030 mm)	BLOCK HEIGHT	16" (406 mm)	+/- 3/16" (5 mm)
	LENGTH	48" (1219 mm)	+/- 1/2" (13 mm)
	WIDTH*	39" (991 mm)	+/- 1/2" (13 mm)
45" (1520 mm)	BLOCK HEIGHT	16" (406 mm)	+/- 3/16" (5 mm)
	LENGTH	48" (1219 mm)	+/- 1/2" (13 mm)
	WIDTH*	45" (1143 mm)	+/- 1/2" (13 mm)

* BLOCK TOLERANCE MEASUREMENTS SHALL EXCLUDE VARIABLE FACE TEXTURE

E. WITH THE EXCEPTION OF HALF-BLOCK UNITS, CORNER UNITS AND OTHER SPECIAL APPLICATION UNITS, THE PRECAST MODULAR BLOCK UNITS SHALL HAVE TWO SHEAR COMPONENTS THAT ENGAGE THE SHEAR CHANNEL IN THE BOTTOM OF THE BLOCK COURSE ABOVE.

F. WITHOUT FIELD CUTTING OR SPECIAL MODIFICATION, THE PRECAST MODULAR BLOCK UNITS SHALL BE CAPABLE OF ACHIEVING A MINIMUM RADIUS OF 14 FT (4.27 m).

G. THE PRECAST MODULAR BLOCK UNITS SHALL BE MANUFACTURED WITH AN INTEGRALLY CAST SHEAR COMPONENTS THAT ESTABLISH A STANDARD HORIZONTAL SET-BACK FOR SUBSEQUENT BLOCK COURSES. THE PRECAST MODULAR BLOCK SYSTEM FOR THIS PROJECT SHALL BE AVAILABLE IN THIS HORIZONTAL SETBACK FACING BATTER OPTION:

1" (25.4 mm) SETBACK PER 16" HIGH UNIT TO ACHIEVE A 3.6° BATTER

H. THE PRECAST MODULAR BLOCK UNIT FACE TEXTURE SHALL BE SELECTED BY THE OWNER FROM THE AVAILABLE RANGE OF TEXTURES AVAILABLE FROM THE PRECAST MODULAR BLOCK MANUFACTURER. EACH TEXTURED BLOCK FACING UNIT SHALL BE A MINIMUM OF 5.33 SQUARE FEET (0.495 SQUARE METERS).

I. RECON WALL FACE TEXTURE OPTIONS MAY INCLUDE: "LESUEUR COUNTY LIMESTONE", "NORTH SHORE GRANITE", "OLD WORLD", "RUSTIC" OR "WEATHERED EDGE". CONTACT LOCAL MANUFACTURER FOR OPTIONS, CONFIRM AND APPROVE FACE TEXTURE OPTIONS WITH OWNER PRIOR TO PRODUCTION.

J. THE BLOCK COLOR SHALL BE SELECTED BY THE OWNER FROM THE AVAILABLE RANGE OF COLORS AVAILABLE FROM THE PRECAST MODULAR BLOCK MANUFACTURER.

K. ALL PRECAST MODULAR BLOCK UNITS SHALL BE SOUND AND FREE OF CRACKS OR OTHER DEFECTS THAT WOULD INTERFERE WITH THE PROPER INSTALLATION OF THE UNIT, IMPAIR THE STRENGTH OR PERFORMANCE OF THE CONSTRUCTED WALL. PMB UNITS TO BE USED IN EXPOSED WALL CONSTRUCTION SHALL NOT EXHIBIT CHIPS OR CRACKS IN THE EXPOSED FACE OR FACES OF THE UNIT THAT ARE NOT OTHERWISE PERMITTED. CHIPS SMALLER THAN 1.5" (38 mm) IN ITS LARGEST DIMENSION AND CRACKS NOT WIDER THAN 0.012" (0.3 mm) AND NOT LONGER THAN 25% OF THE NOMINAL HEIGHT OF THE PMB UNIT SHALL BE PERMITTED. PMB UNITS WITH BUG HOLES IN THE EXPOSED ARCHITECTURAL FACE SMALLER THAN 0.75" (19 mm) IN ITS LARGEST DIMENSION SHALL BE PERMITTED. BUG HOLES, WATER MARKS, AND COLOR VARIATION ON NON-ARCHITECTURAL FACES ARE ACCEPTABLE. PMB UNITS THAT EXHIBIT CRACKS THAT ARE CONTINUOUS THROUGH ANY SOLID ELEMENT OF THE PMB UNIT SHALL NOT BE INCORPORATED IN THE WORK REGARDLESS OF THE WIDTH OR LENGTH OF THE CRACK.

L. PRE-APPROVED MANUFACTURERS SHALL ONLY BE SELECTED FROM LICENSED AND AUTHORIZED MANUFACTURERS OF: RECON WALL SYSTEMS, INC., 7600 WEST 27TH ST., #229,ST LOUIS PARK, MN 55426, PHONE: (952) 922-0027, FAX: (952) 922-0028, WEBSITE: WWW.RECONWALLS.COM

M. SUBSTITUTIONS. TECHNICAL INFORMATION DEMONSTRATING CONFORMANCE WITH THE REQUIREMENTS OF THIS SPECIFICATION FOR AN ALTERNATIVE PRECAST MODULAR BLOCK RETAINING WALL SYSTEM MUST BE SUBMITTED FOR PREAPPROVAL AT LEAST 14 CALENDAR DAYS PRIOR TO THE BID DATE. ACCEPTABLE ALTERNATIVE PMB RETAINING WALL SYSTEMS, OTHERWISE FOUND TO BE IN CONFORMANCE WITH THIS SPECIFICATION, SHALL BE APPROVED IN WRITING BY THE OWNER 7 DAYS PRIOR TO THE BID DATE. THE OWNER'S REPRESENTATIVE RESERVES THE RIGHT TO PROVIDE NO RESPONSE TO SUBMISSIONS MADE OUT OF THE TIME REQUIREMENTS OF THIS SECTION OR TO SUBMISSIONS OF BLOCK RETAINING WALL SYSTEMS THAT ARE DETERMINED TO BE UNACCEPTABLE TO THE OWNER.

2.02 GEOTEXTILE

A. NONWOVEN GEOTEXTILE FABRIC SHALL BE PLACED AS INDICATED ON THE RETAINING WALL CONSTRUCTION SHOP DRAWINGS. ADDITIONALLY, THE NONWOVEN GEOTEXTILE FABRIC SHALL BE PLACED IN THE V-SHAPED JOINT BETWEEN ADJACENT BLOCK UNITS ON THE SAME COURSE. THE NONWOVEN GEOTEXTILE FABRIC SHALL MEET THE REQUIREMENTS CLASS 3 CONSTRUCTION SURVIVABILITY IN ACCORDANCE WITH AASHTO M 288.

B. PREAPPROVED NONWOVEN GEOTEXTILE PRODUCTS
1. US FABRICS 205NW
2. MIRAFI 140N

2.03 DRAINAGE STONE AND WALL INFILL

A. DRAINAGE STONE (AND WALL INFILL FOR RETAINING WALLS DESIGNED AS MODULAR GRAVITY STRUCTURES) SHALL BE A DURABLE CRUSHED STONE CONFORMING TO GRADATION NO. 57 SIZE PER ASTM C33 WITH THE FOLLOWING PARTICLE-SIZE DISTRIBUTION REQUIREMENTS PER ASTM D422:

SIEVE SIZE	PERCENT PASSING
1-1/2 INCH	100
1 INCH	95 TO 100
1/2 INCH	25 TO 60
NO. 4	0 TO 10
NO. 8	0 TO 5

2.04 LEVELING PAD

NO. THE PRECAST MODULAR BLOCK UNITS SHALL BE PLACED ON A LEVELING PAD CONSTRUCTED FROM CRUSHED STONE OR UNREINFORCED CONCRETE. THE LEVELING PAD SHALL BE CONSTRUCTED TO THE DIMENSIONS AND LIMITS SHOWN ON THE RETAINING WALL DESIGN DRAWINGS PREPARED BY THE RETAINING WALL DESIGN ENGINEER. THE LEVELING PAD STONE SHALL HAVE THE FOLLOWING GRADATION:

SIEVE SIZE	PERCENT PASSING
1 INCH	100
NO. 4	35 TO 70
NO. 40	10 TO 35
NO. 200	0 TO 15

2.05 DRAINAGE

A. DRAINAGE PIPE
1. DRAINAGE COLLECTION PIPE SHALL BE A 4" (100 mm) DIAMETER, 3-HOLE PERFORATED, HDPE PIPE WITH A MINIMUM PIPE STIFFNESS OF 22 PSI (152 KPA) PER ASTM D2412.
2. THE DRAINAGE PIPE SHALL BE MANUFACTURED IN ACCORDANCE WITH ASTM D1248 FOR HDPE PIPE AND FITTINGS.

PART 3 - EXECUTION

3.01 GENERAL

A. ALL WORK SHALL BE PERFORMED IN ACCORDANCE WITH OSHA SAFETY STANDARDS, STATE AND LOCAL BUILDING CODES AND MANUFACTURER'S REQUIREMENTS.

B. THE GENERAL CONTRACTOR IS RESPONSIBLE FOR THE LOCATION AND PROTECTION OF ALL EXISTING UNDERGROUND UTILITIES. ANY NEW UTILITIES PROPOSED FOR INSTALLATION IN THE VICINITY OF THE RETAINING WALL SHALL BE INSTALLED CONCURRENT WITH RETAINING WALL CONSTRUCTION. THE GENERAL CONTRACTOR SHALL COORDINATE THE WORK OF SUBCONTRACTORS AFFECTED BY THIS REQUIREMENT.

C. NEW UTILITIES INSTALLED BELOW THE RETAINING WALL SHALL BE BACKFILLED AND COMPACTED TO A MINIMUM OF 98% MAXIMUM DRY DENSITY PER ASTM D698 STANDARD PROCTOR.

D. THE GENERAL CONTRACTOR IS RESPONSIBLE TO ENSURE THAT SAFE EXCAVATIONS AND EMBANKMENTS ARE MAINTAINED THROUGHOUT THE COURSE OF THE PROJECT.

E. ALL WORK SHALL BE INSPECTED BY THE INSPECTION ENGINEER AS DIRECTED BY THE OWNER.

3.02 EXAMINATION

A. PRIOR TO CONSTRUCTION, THE GENERAL CONTRACTOR, GRADING CONTRACTOR, RETAINING WALL INSTALLATION CONTRACTOR AND INSPECTION ENGINEER SHALL EXAMINE THE AREAS IN WHICH THE RETAINING WALL WILL BE CONSTRUCTED TO EVALUATE COMPLIANCE WITH THE REQUIREMENTS FOR INSTALLATION TOLERANCES, WORKER SAFETY AND ANY SITE CONDITIONS AFFECTING PERFORMANCE OF THE COMPLETED STRUCTURE. INSTALLATION SHALL PROCEED ONLY AFTER UNSATISFACTORY CONDITIONS HAVE BEEN CORRECTED.

3.03 PREPARATION

A. FILL SOIL.
1. THE INSPECTION ENGINEER SHALL VERIFY THAT RETAINED BACKFILL MATERIAL PLACED WITHIN A HORIZONTAL DISTANCE OF ONE (1.0) TIMES THE WALL HEIGHT BEHIND THE WALL BLOCKS SATISFIES THE CRITERIA OF THIS SECTION.
2. THE INSPECTION ENGINEER SHALL VERIFY THAT ANY FILL SOIL INSTALLED IN THE FOUNDATION AND RETAINED SOIL ZONES OF THE RETAINING WALL SATISFIES THE SPECIFICATION OF THE RETAINING WALL DESIGN ENGINEER AS SHOWN ON THE CONSTRUCTION DRAWINGS.

B. EXCAVATION.
1. THE GRADING CONTRACTOR SHALL EXCAVATE TO THE LINES AND GRADES REQUIRED FOR CONSTRUCTION OF THE PRECAST MODULAR BLOCK RETAINING WALL AS SHOWN ON THE CONSTRUCTION DRAWINGS. THE GRADING CONTRACTOR SHALL MINIMIZE OVER-EXCAVATION. EXCAVATION SUPPORT, IF REQUIRED, SHALL BE THE RESPONSIBILITY OF THE GRADING CONTRACTOR.
2. OVER-EXCAVATED SOIL SHALL BE REPLACED WITH COMPACTED FILL IN CONFORMANCE WITH THE SPECIFICATIONS OF THE RETAINING WALL DESIGN ENGINEER AND "DIVISION 31, SECTION 31 20 00 - EARTHMOVING" OF THE PROJECT SPECIFICATIONS OR AT THE DIRECTION OF THE PROJECT GEOTECHNICAL ENGINEER.
3. EMBANKMENT EXCAVATIONS SHALL BE BENCH CUT AS DIRECTED BY THE PROJECT GEOTECHNICAL ENGINEER AND INSPECTED BY THE INSPECTION ENGINEER FOR COMPLIANCE.

C. FOUNDATION PREPARATION.
1. PRIOR TO CONSTRUCTION OF THE PRECAST MODULAR BLOCK RETAINING WALL, THE LEVELING PAD AREA AND UNDERCUT ZONE (IF APPLICABLE) SHALL BE CLEARED AND GRUBBED. ALL TOPSOIL, BRUSH, FROZEN SOIL AND ORGANIC MATERIAL SHALL BE REMOVED. ADDITIONAL FOUNDATION SOILS FOUND TO BE UNSATISFACTORY BEYOND THE SPECIFIED UNDERCUT LIMITS SHALL BE UNDERCUT AND REPLACED WITH APPROVED FILL AS DIREC

TIEBACK TESTING REQUIREMENTS FOR PIER WALL

SPECIAL PROVISION FOR
TIE-BACK EARTH RETENTION SYSTEM

GENERAL: The work covered under this Special Provision includes all necessary design and construction requirements for providing a Tieback Buttress system beneath as shown on the plans or as established by the Engineer in accordance with the Special Provisions included below. The wall is to be constructed of drilled shafts socketed into bedrock. The special provisions for the drilled shafts have been provided under separate cover.

CONTRACTOR QUALIFICATIONS. Prior to the commencement of tieback work, the Contractor shall submit to the project engineer a report, which identifies the Contractor's personnel who will be performing and supervising the tieback work. The report shall include the names of engineer-in-charge, on-site supervisors, and drill operators. The report shall also contain a list of employers' names and telephone numbers, location and dates of previous permanent tieback projects, and the extent of work performed. This information must be verifiable. Tieback work shall be defined as all activities related to the tiebacks, including furnishing, fabricating, drilling, installing, and testing the tiebacks.

ENGINEER-IN-CHARGE. The engineer-in-charge shall be a registered professional engineer and shall be responsible for overseeing the tieback work and verifying the results of the tieback testing. The engineer-in-charge shall have three (3) years of construction experience in the installation of permanent tieback and shall have overseen the successful installation of 100 permanent tiebacks. The work experience time period is computed by the addition of all documented durations of tieback work time on construction projects.

ON-SITE SUPERVISORS. An on-site supervisor shall be present at the job site at all times during the performance of tieback work. The on-site supervisor shall have one (1) year of construction experience in the installation of permanent tiebacks and shall have supervised the successful installation of 100 permanent tiebacks. The work experience time period is computed by the addition of all documented durations of tieback work time on construction projects.

DRILL OPERATORS. Drill operators shall have successfully installed a minimum of 50 permanent tiebacks and have 2 years experience with permanent tieback installation.

The project engineer will approve or reject the Contractor's personnel with seven (7) calendar days following the submission of the report of names and verifiable resume information. Tieback work shall not commence until a written letter of approval has been provided by the project engineer. In the event the Contractor elects to substitute personnel, verifiable resume information shall be submitted to the project engineer prior to that individual's performance of tieback work. The project engineer will approve or reject the Contractor's proposed substitute within three (3) calendar days.

TIEBACKS

DESCRIPTION. This work shall consist of furnishing and installing permanent tiebacks constructed in accordance with these provisions and in reasonably close conformity with the lines, grades, design requirements, details and dimensions shown on the plans or otherwise directed. The tieback work to be performed shall comply with the latest edition of "Recommendations for Prestressed Rock and Soil Anchors" Published by the Post Tensioning Institute located at 301 W. Osborn, Suite 3500, Phoenix, Arizona, 85013 (Telephone 601-265-9158) and FHWA-DP-68-IR, "Permanent Ground Anchors" (latest edition) except as modified herein. Reference shall also be made to "Tiebacks" FHWA/Rd-82/047, Federal Highway Administration, Washington, D.C., July 1982, and "Design Manual For Permanent Ground Anchor Walls" FHWA-RD-97-130, Federal Highway Administration, McLean, VA, September 1998.

DEFINITIONS. The definitions of the various components and procedures of the tieback system are provided below.

a) **Tieback.** A structural system that uses an anchor in the ground to secure a tendon that applies a force to a structure. The tieback is composed of a tendon (bar or strand), grout, sheathing, corrosion inhibitor coating, anchor head, bearing plate, trumpet, spacers, and centralizers.

b) **Anchor.** The portion of the tieback system that transmits the tensile force in the prestressing steel to the ground. The anchor generally consists of two components: 1) The tendon and 2) the anchor grout.

c) **Tendon.** The prestressing steel (bar or strand) and anchorage and also the sheathing and coating when required.

d) **Anchorage.** The anchor head and bearing plate, which transfer the tension, force in the tendon to the structure.

e) **Sheathing.** Enclosure around the unbonded length of the prestressing steel to prevent the prestressing steel from bonding to the surrounding grout and to provide corrosion protection.

f) **Coating.** Material used to protect against corrosion and/or lubricate the prestressing steel in the unbonded length.

g) **Anchor Grout.** (Primary Grout). Material that is injected into the anchor hole to cover the anchor length of the tendon and provide the medium for transmitting the tendon tensile force to the ground within the bond length.

h) **Secondary Grout.** Material that is injected into the anchor hole to cover the stressing length of the tendon to provide corrosion protection.

i) **Anchor Length.** (Tendon Bond Length). The length of the tieback system where the tensile force in the tendon is transferred to the ground.

j) **Unbonded Length.** The length of the tieback system which is free to elongate and is located between the anchor head and tendon bond length.

k) **Jacking Length.** The length of the prestressing steel which is located on the jacking side of the final anchorage position and tensioned during the stressing of the tendon.

l) **Unbonded Testing Length (Stressing Length).** The sum of the unbonded length and the jacking length that is equal to the length of the tendon that is free to elongate elastically during stressing.

m) **Design Load.** Anticipated final maximum effective load in the anchor after allowance for time dependent losses or gains. Design loads are shown in the tieback table in the plans.

n) **Proof Load.** Temporary prestressing load in an anchor at a force level greater than its design load for testing purposes.

o) **Transfer (Lock-Off) Load.** Prestressing force in an anchor after proof loading immediately after the force has been transferred from the jack to the stressing anchorage.

p) **Alignment Load.** The nominal load maintained on an anchor during testing to assure that the testing equipment remains in proper position.

q) **Proof Test.** An anchor load test that requires the application of defined incremental loads to the anchor tendon. The movement of the tendon is recorded at each load increment.

r) **Performance Test.** This load test requires the application of defined incremental loading and unloading of the anchor tendon. The movement of the tendon is recorded at each loading and unloading increment. The maximum load applied during this test is maintained constant for a defined time period while movements are recorded.

s) **Minimum guaranteed ultimate strength (GUTS).** The minimum guaranteed breaking load of the tendon as defined in the pertinent ASTM Specification for tendon material.

t) **Initial Lift-Off Reading.** A check made to determine that the actual transfer load is within 5% of the desired transfer load. This check is made immediately after transferring the load to the stressing anchorage.

MATERIALS The materials shall be in accordance with the requirements shown below. The Contractor shall provide for the complete tieback system, cement grout, and all other incidentals necessary to complete the work.

a) **Bar Type Tendon.** Steel bars shall conform to the requirements of ASTM A722 "Uncoated High Strength Bars for Prestressed Concrete".

b) **Strand Type Tendon.** The strand shall conform to the requirements of ASTM A416 "Uncoated Seven Wire Stress-Relieved Steel Strand for Prestressed Concrete" or to Compact Strand requirements as per ASTM 779 "Uncoated Seven Wire Compacted Stress-Relieved Steel Strand for Prestressed Concrete".

c) **Sheathing.** The sheath (bond breaker) shall be either a Polyvinylchloride (PVC), Polyethylene, or polypropylene pipe or tube. The sheath may surround the individual prestressing steel elements or the entire prestressing steel. The material shall be capable of withstanding damage during shipping, handling and installation. The sheath shall have a minimum wall thickness of 0.04 inches (1mm). The material is subject to the approval of the Engineer. PVC pipe or tube shall conform to the requirements of ASTM D3915. Polypropylene pipe or tube shall be designation Type II 26500D and conform to the requirements of ASTM D-2146. Polyethylene pipe or tube shall be high density polyethylene cell classification334413 and conform to the requirements of ASTM D-3350.

d) **Corrosion Inhibitor Coating.** The coating shall consist of a grease film compound to provide both corrosion inhibiting properties and lubricating properties. Corrosion inhibitor coating requirements shall be as follows:

- Drop Point; 300 Degrees Fahrenheit Minimum in conformity with ASTM D-566 or ASTM D-2265.
- Flash Point; 300 Degrees Fahrenheit Minimum in conformity with ASTM D-92.
- Water Content; 0.1% Maximum in conformity with ASTM D-95.
- Oil Separation; 0.5% by weight maximum at 160 degrees Fahrenheit in conformity with FTMS 791B, Method 321.2.
- Corrosion Test; 5% Salt Fog at 100 degrees Fahrenheit. 5 mils (Q panel Type S).
  Normal Conditions: Rust Grade 7 or better after 720 hours.
  Aggressive Conditions: Rust Grade 7 or better after 1000 hours.
  Corrosion test to be performed in accordance with ASTM B-117 and ASTM D-610.
- Soak Test; 5% Salt Fog at 100 degrees Fahrenheit. 5 mils (Q panel Type S). Immerse panels in 50% salt solution and expose to 5% salt fog. No emulsification after 720 hours in conformity with ASTM B-117 Modified. Water Soluble.

Ions:		
	Chlorides –	10 ppm Max. by ASTM D-512
	Nitrates –	10 ppm Max. by ASTM D-992
	Sulfides –	10 ppm Max. by APHA 427D (15th Edition)

- Sheathing Hardness and Volume Change; 10% maximum for volume, 15% maximum for hardness after 40 days at 150 degrees Fahrenheit in conformity with ASTM D4289. Sheathing tensile strength change 30% maximum after 40 days at 150 degrees Fahrenheit in conformity with ASTM D-638.

e) **Centralizers.** Centralizers shall be fabricated from a plastic material, which is nondetrimental to the prestressing steel.

f) **Grout.** Cement anchor grout (primary grout) shall consist of a pumpable mixture. The cement shall be a Type I, Type II, or Type III conforming to ASTM C150. Grout additives may be used provided the Contractor submits information concerning the grout additive and obtains approval from the Engineer. Chemical additives that are non-detrimental to the prestressing steel which can control bleed, and/or retard set may be used in the anchor grout.

g) **Trumpet.** The trumpet shall be made of steel or plastic.

h) **Spacers.** Spacers shall be fabricated from a plastic material that is nondetrimental to the prestressing steel.

GENERAL CONSTRUCTION REQUIREMENTS. The Contractor shall be responsible for determining the anchor bond length and anchor diameter necessary to develop adequate load capacity to satisfy anchor testing acceptance criteria for the design load shown in the plans. The anchor bond lengths, anchor diameter, and other related tieback items are the calculated dimensions and recommended details from the preliminary design. The details and dimension relating to the tieback system shown on the plans are for information only. The Contractor shall use his expertise to determine tendon type, drilling method, grouting pressures, multiple grouting techniques, bonded lengths variations such as undereaming or belling anchor diameters, etc. The Contractor shall provide a tieback system as per the limitations and requirements defined in this provision and as shown on the plans.

The tiebacks shall be installed at the angle shown on the plans. Tiebacks, which are installed at an angle that varies from the plan value, may require adjustments to the design load value such that the required horizontal force component is acceptable.

Couplers shall not be used unless permission has been granted by the Engineer. The ultimate capacity of the couplers shall not be less than the GUTS of the tendon.

The physical dimensions of the anchorage components shall be suitable for transferring the tension force in the tendon to the proposed caisson. The ultimate capacity of the anchorage shall not be less than 95 percent of the GUTS of the tendon.

A trumpet shall be used to make the transition from the bearing plate to the protection over the unbonded length. A tight-fitting seal shall be provided at the end of the trumpet. The trumpet shall be completely filled with anticorrosion grease or grout.

TENDON CONSTRUCTION REQUIREMENTS. The Contractor shall furnish and install a tendon size which when tensioned to the tieback design load, the loading does not tension the tendon beyond 60 percent of the GUTS of the tendon and the tendon when tensioned to the maximum test load (1.33 times the tieback design load), the loading does not tension the tendon beyond 80 percent of the GUTS.

Tendons shall be shop fabricated. The bond length shall be clean. The unbonded length of the tendon shall have the grease and sheath installed at the shop. The grease (corrosion inhibitor) shall fill all space between strand wires or bar and the sheathing. Tendons shall be stored and handled in such a manner as to avoid damage or corrosion. Prestressing steel shall be protected from dirt, rust, or deleterious substances. (A light coating of rust on the steel will not affect the function of the tendon.) Corrosion or pitting is cause for tendon rejection. If the Engineer is uncertain about the extent of the corrosion, the steel shall be tested, at the Contractor's expense, to determine if the tendon still meets the appropriate ASTM Specification.

GROUT CONSTRUCTION REQUIREMENTS. The Contractor shall furnish and install the grout in accordance with the following requirements unless otherwise directed.

Anchor grout placement by tremie method or pressure grouting are acceptable methods of grout placement.

The grouting equipment shall be sized to enable the tieback to be grouted in one continuous operation. Neat cement grouts should be screened to remove lumps. The maximum size of the screen openings shall be 0.250 inches (6 mm). Mixing and storage times should not cause excessive temperature buildup in the grout. The mixer should be capable of continuously agitating the grout even if grout admixtures are used.

The anchor grout shall be injected at the lowest point of the tieback. The grout may be placed using grout tubes, casing or drill roads. The grout can be placed before or after insertion of the tendon. The quantity of the grout shall be recorded. The grout takes shall be controlled to prevent excessive ground heave.

The tieback shall remain undisturbed for a minimum of three days or until the grout has cured to a cube strength of 3,500 psi.

The Contractor shall provide the Engineer with his proposed grout mix design and shall include documentation by appropriate standard test results that indicate that the proposed mix will develop a 7-day compressive strength that is greater than 3,500 psi (AASHTO T 106). Grout water/cement ratio shall be between 0.35 and 0.45.

Generally, strength testing of the grout will not be required during construction of the tieback because proof-testing of the tieback will verify the performance of the grout at part of the overall tieback system. The engineer may request that the Contractor perform a standard compression strength test(s) on grout samples obtained from the initial installation of the tiebacks. Compression strength tests will be required if additional admixtures are used or irregularities occur in grout consistency and/or tieback testing results. (AASHTO T 106).

TIEBACK INSTALLATION CONSTRUCTION REQUIREMENTS. The Contractor shall install the tiebacks in accordance with the following requirements unless otherwise directed.

Auger drilling, rotary drilling or percussion-driven casing may be used to install tieback systems. Installation of tiebacks will require drilling through, earth and rock. In the bonded anchor zone rotary percussion drills shall be used. The specialty contractor shall determine the appropriate installation methods. The centerline of the hole for the tendon shall be located within three inches of the plan location.

Installation of tiebacks shall be in accordance with the overall project sequence of construction.

Centralizers shall position the tendon in the drill hole such that a minimum of 0.5 inch (12 mm) of grout cover is provided for the full length of the tendon. The spacing of the centralizers shall not exceed 10 feet (3.0 m). Spacers shall be used to separate elements of multi-element tendons. A combination centralizer-spacer can be used.

REPORT OF TIEBACK INSTALLATION. The Contractor shall submit a Final Report of Tieback Installation to the Engineer.

TIEBACK SYSTEM TESTING

DESCRIPTION. The Contractor shall load test each tieback as described in the provision unless otherwise directed. The Contractor is responsible for all testing and preparation of a final report as outlined herein.

CONSTRUCTION REQUIREMENTS. A calibrated hydraulic jack and pump shall be used to load the tendon. The jack and pump shall be calibrated as a unit. The Contractor shall submit the calibration curve to the Engineer for approval prior to performing any tests. Each load increment shall be totally applied in less than 60 seconds after the jack pump is started. All observation time periods begin when the jack pump is started. The total and creep movements of the anchor shall be measured to the nearest 0.001 inch (.025 mm) with a dial indicator. The dial indicator shall be supported on a reference independent of the anchor structure.

All jacks, pumps, load cells, dial gauges and other instruments used to measure load and deflection of the tieback system shall be accompanied by documented verification of the calibration of the gauges and devices. The calibration shall have been obtained within the past year and shall have been verified by a reliable testing agency equipped to do the required calibrating. The Engineer shall be furnished with all appropriate documentation. A calibrated mastergage may be requested by the engineer to check the test gauge.

Before tieback-testing operations may begin on a tieback, lagging panel installation and backfill placement and compaction shall be completed to a level no less than 5 ft. (1.5 m) above the level of the adjacent tieback. This criterion does not apply within areas of the project in which the lagging panel installation does not extend to a depth within 5 ft. (1.5 m) of the tieback location.

Testing shall not be performed until after the anchor grout has cured for 3 days or until the grout has cured to cube strength of 3500 psi.

Each tieback system shall be load tested in accordance with the following:

1) **Creep Test** – Creep test is not required on this project.

2) **Performance Test – Performance tests shall be performed on the FIRST tieback installed and, in addition, on at least 5 percent of the remaining tiebacks, or as directed**. Performance tests shall be conducted by incrementally loading and unloading the tieback and recording the movements as per the following loading sequence:

P = Tieback design load for production anchor
AL = Alignment load which is normally between 2 and 10 percent of the design load.

1.	AL	11.	0.25P	21.	0.25P
2.	0.25P	12.	0.50P	22.	0.50P
3.	AL	13.	0.75P	23.	1.00P
4.	0.25P	14.	1.00P	24.	1.20P
5.	0.50P	15.	AL	25	1.33P
6.	AL	16.	0.25P	26.	1.20P
7.	0.25P	17.	0.50P	27.	1.00P
8.	0.50P	18.	1.00P	28.	LOCK-OFF
9.	0.75P	19.	1.20P		
10.	AL	20.	AL		

The anchor tendon may be completely unloaded prior to lock-off, if circumstances warrant. Final stressing then does not require further movement readings.

The test load number 25 shall be held for 10 minutes. Total movements with respect to a fixed reference point shall be recorded at 1 minute, 2, 3, 4, 5, 6, and 10 minutes. If the total movement between 1 minute and 10 minutes exceeds 0.04 in. (1mm), the test load shall be held for an additional 50 minutes. Total movements shall be recorded at 15 minutes, 20, 25, 30, 45, and 60 minutes.

All other loads shall be held until movement has stabilized (approximately one minute). Care must be taken to assure that the applied load is maintained constant during the holding period. A load cell shall be used to monitor the applied load during the holding period. A creep curve showing the creep movement between 1 minute and 10 minutes (between 6 and 60 minutes if the loading is held for 60 minutes) shall be plotted as a function of the logarithm of time.

A performance-tested tieback is acceptable if:

1. The total elastic movement obtained from the performance test exceeds 80% of the theoretical elongation of the stressing length; and be less than the theoretical elongation of the stressing length plus 50% of the bond length, and

2. The creep rate does not exceed 0.080 inches (2 mm) per logarithmic cycle of time during the final log cycle of the performance test, regardless of the tendon length and load.

3) **Proof Test.** All tiebacks which are not subject to performance tests shall be proof tested. Proof tests shall be conducted by incrementally loading and recording the movements as per the following sequence:

1. AL
2. 0.25P
3. 0.50P
4. 0.75P
5. 1.00P
6. 1.20P
7. 1.33P
8. 1.00P
9. LOCK-OFF

P = Tieback design load for production anchor
AL = Alignment load which is normally between 2 and 10 percent of the design load.

Loading number 7 shall be maintained constant for a 10-minute holding period. All other loads shall be held until movement has stabilized, but not more than one minute. During the holding period, the movement shall be recorded at each of the following elapsed times: 0, 1, 2, 3, 4, 5, 6, and 10 minutes. If the movement between 1 and 10 minutes exceeds 0.04 inches, the test load shall be held for an additional 50 minutes. Total movements shall be recorded at 15, 20, 25, 30, 45, and 60 minutes. The total movement shall be plotted as a function of load for each proof-tested tieback. A proof-tested anchor is acceptable if:

1. The total movement obtained from the proof test measured between 50% of the design load and test load exceeds 80% of the theoretical elastic elongation of the free stressing length for this load increment; and

2. The creep rate does not exceed 0.080 inches per logarithmic cycle of time during the final log cycle of the proof test, regardless of tendon length or load.

Proof-tested anchors which fail to meet the above acceptance criteria will be acceptable if the load is maintained until a creep rate is determined and the creep rate is less than 0.08 inches per log cycle of time.

4) **Lift-Off Test** – Performance of initial lift-off readings are required on each tieback. This test involves reconnecting the jack and gradually applying the load until the tendon begins to elongate. The jack extension should be immediately terminated after deflection begins and the load required for the lift-off recorded. The lift-off load should be approximately equal to the design load plus an allowance for long term losses. If the lift-off varies more than 5% from the design load plus losses, the transfer load should be adjusted and the lift-off test repeated.

Should the Contractor request permission to use a tieback that has failed to satisfy testing acceptance criteria, he must retest the anchor to determine the actual tieback capacity which will satisfy the testing acceptance criteria. The retesting can only be done 1) if approved by the Engineer and 2) provided that the total movement measured at the anchor head was greater than 0.8 of the theoretical elastic elongation of the stressing length. An additional tieback shall then be installed at a location specified by the Engineer, and in accordance with this provision. This additional tieback shall be tested to determine if the total capacity of the two tiebacks exceeds the 1.33P load. Changes or modifications of the method of installation or tieback type shall require additional testing as determined by the Engineer. Wall design engineer may change or modify this testing program.

REV	DATE	DESCRIPTION

PRELIMINARY NOT FOR CONSTRUCTION

SIGNATURE DATE:

JOSEPH W. KOWALSKI, P.E.
3710 Section Road
Cincinnati, Ohio 45236
Phone 513.403.5657
www.RetainingWallExpert.com

© COPYRIGHT, 2019, JOSEPH W. KOWALSKI. ALL RIGHTS RESERVED.

TITLE: RETAINING WALL DESIGN
TIE-BACK SPECIFICATIONS

FOR: Costco Wholesale
SCALE: As Noted
PROJECT: Costco– South Windsor
SHEET: 18064-R.15
LOCATION: South Windsor, Connecticut

CAD FILE: D:\Google Drive\KEFILES\2018\18064-Costco-SWindsor\Wall Designs\Costco-SWindsorCT-092320.dwg LAYOUT: TIEBACK SPECIFICATIONS PLOTTED: 9/25/2020 4:16 PM BY: joe

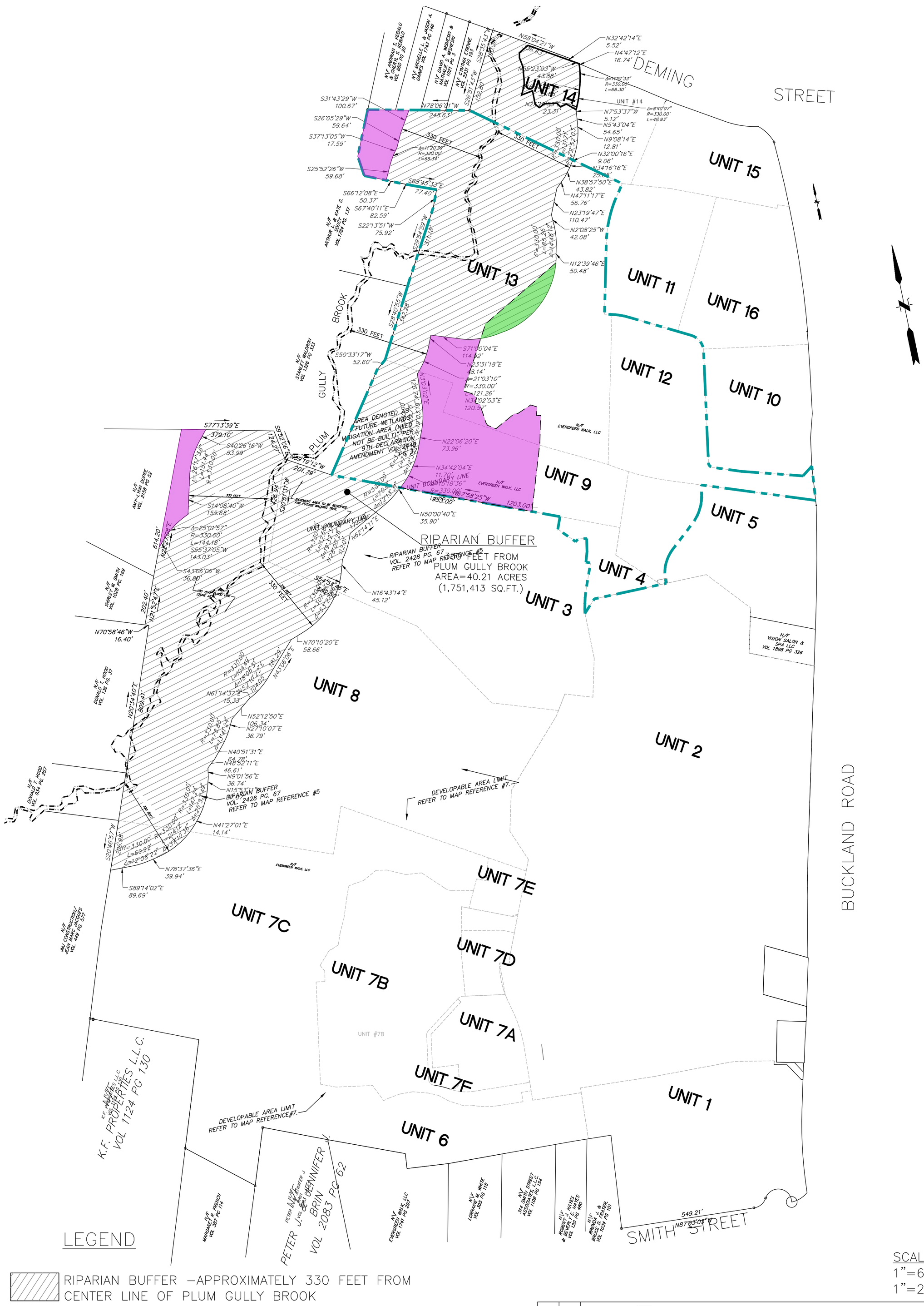

LEGEND

RIPARIAN BUFFER –APPROXIMATELY 330 FEET FROM CENTER LINE OF PLUM GULLY BROOK

SCALE:
1"=600' @8.5X11
1"=200'@24X36

REV. 07/11/14
REV. 09/06/13
REV. 06/20/13
REV. 09/18/08
REV. 04/25/07
REV. 03/15/07
REV. 10/12/06
REV. 02/11/04

FN: P10STP001–PUD | MS:
LM: PUDSCH8.1b | UCS:WRLD

FUSS & O'NEILL INC. *Consulting Engineers*
146 HARTFORD ROAD, MANCHESTER, CONNECTICUT 06040
(860) 646–2469

EXHIBIT A
RIPARIAN BUFFER BOUNDARY
EVERGREEN WALK

BUCKLAND RD. SOUTH WINDSOR CONNECTICUT

PROJ. NO.:00–481A10 DATE: 11/06/03 SCALE: 1"=600'

H:\DWG\2000\481\PUD UNITS\PUD UNITS.DWG