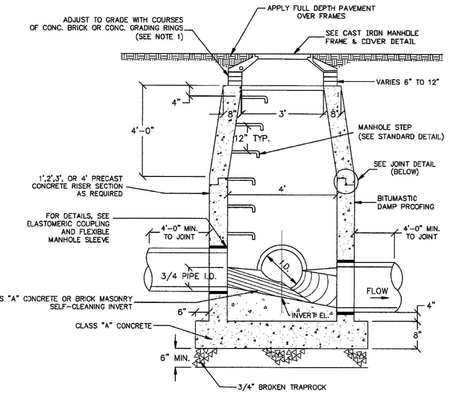

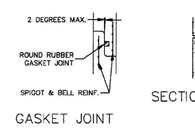

NOTES:
1. TOP STEP TO BE A MAXIMUM OF 24" BELOW TOP OF MANHOLE FRAME & COVER ELEVATION.
2. IF TOTAL DEPTH IS TEN FEET OR GREATER, CERTIFICATION OF HS-20 LOAD BEARING CAPACITY SHALL BE SUBMITTED TO THE TOWN ENGINEER FOR APPROVAL PRIOR TO INSTALLATION.
3. SEE MISCELLANEOUS MANHOLE DETAILS SHEET.
4. SEAL ALL LIFTING HOLES INSIDE AND OUTSIDE OF RISER SECTION.

PRECAST CONCRETE SANITARY SEWER MANHOLE
(NOT TO SCALE)
[TOWN OF SOUTH WINDSOR STANDARD DETAIL]

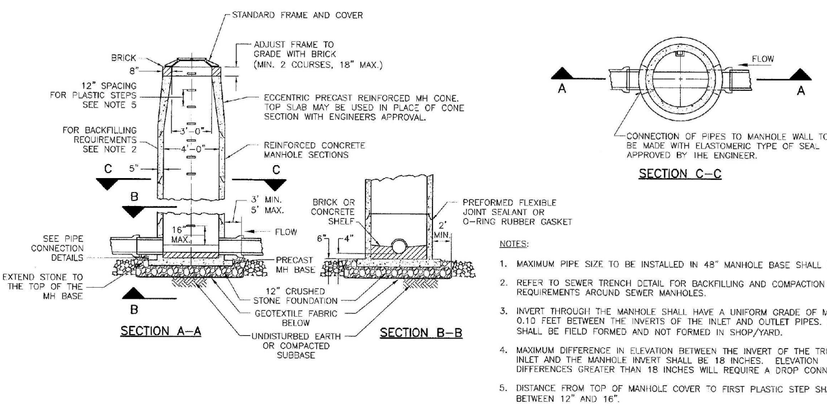

NOTES:
1. MAXIMUM PIPE SIZE TO BE INSTALLED IN 48" MANHOLE BASE SHALL BE 18".
2. REFER TO SEWER TRENCH DETAIL FOR BACKFILLING AND COMPACTION REQUIREMENTS AROUND SEWER MANHOLES.
3. INVERT THROUGH THE MANHOLE SHALL HAVE A UNIFORM GRADE OF MINIMUM 0.10 FEET BETWEEN THE INVERTS OF THE INLET AND OUTLET PIPES. INVERTS SHALL BE FIELD FORMED AND NOT FORMED IN SHOP/YARD.
4. MAXIMUM DIFFERENCE IN ELEVATION BETWEEN THE INVERT OF THE TRIBUTARY INLET AND THE MANHOLE INVERT SHALL BE 18 INCHES. ELEVATION DIFFERENCES GREATER THAN 18 INCHES WILL REQUIRE A DROP CONNECTION.
5. DISTANCE FROM TOP OF MANHOLE COVER TO FIRST PLASTIC STEP SHALL BE BETWEEN 12" AND 16".

TYPE II CONCRETE MANHOLE
(NOT TO SCALE)
[METROPOLITAN DISTRICT STANDARD DETAIL]

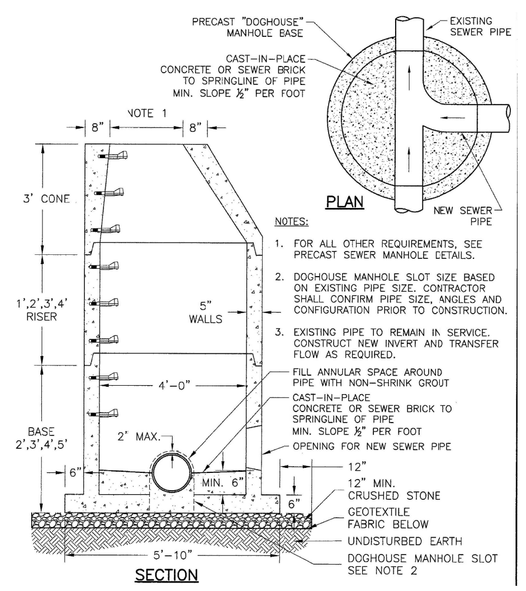

NOTES:
1. FOR ALL OTHER REQUIREMENTS, SEE PRECAST SEWER MANHOLE DETAILS.
2. DOGHOUSE MANHOLE SLOT SIZE BASED ON EXISTING PIPE SIZE. CONTRACTOR SHALL CONFIRM PIPE SIZE, ANGLES AND CONFIGURATION PRIOR TO CONSTRUCTION.
3. EXISTING PIPE TO REMAIN IN SERVICE. CONSTRUCT NEW INVERT AND TRANSFER FLOW AS REQUIRED.

PRECAST DOGHOUSE MANHOLE (48-INCH DIA. EXTENDED BASE)
(NOT TO SCALE)
[METROPOLITAN DISTRICT STANDARD DETAIL]

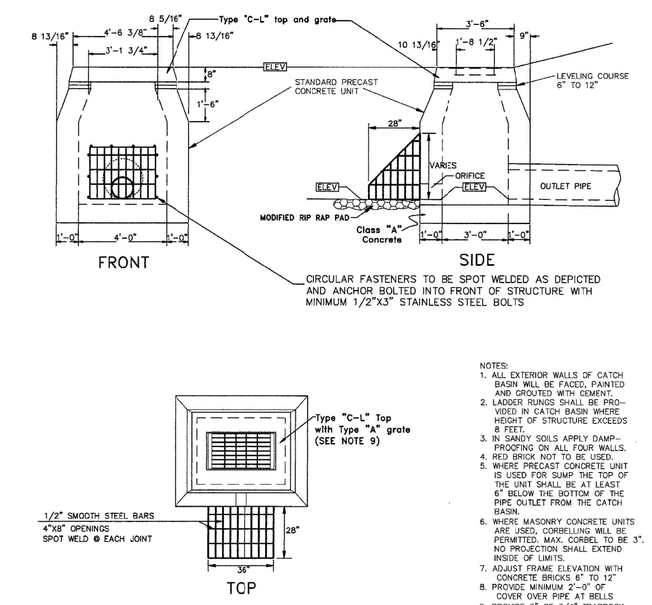

NOTES:
1. ALL EXTERIOR WALLS OF CATCH BASIN WILL BE FACED, PAINTED AND MORTAR COATED AS SHOWN.
2. LADDER RUNGS SHALL BE PROVIDED IN CATCH BASIN WHERE HEIGHT OF STRUCTURE EXCEEDS 8 FEET.
3. IN SANDY SOILS APPLY DAMPPROOFING ON ALL FOUR WALLS. IN OTHER SOILS ON ONE WALL.
4. WHERE PRECAST CONCRETE UNIT IS USED FOR SUMP THE TOP OF THE UNIT SHALL BE AT LEAST 6" BELOW THE BOTTOM OF THE PIPE OUTLET FROM THE CATCH BASIN.
6. WHERE MASONRY CONCRETE UNITS ARE USED, CORBELING WILL BE PERMITTED. MAX. CORBEL TO BE 3". NO PROJECTION SHALL EXTEND INSIDE OF LIMITS.
7. ADJUST FRAME ELEVATION WITH CONCRETE BRICKS 6" TO 12".
8. PROVIDE MINIMUM 2'-0" OF COVER OVER PIPE AT BELLS
9. PROVIDE 5" OF 3/4" TRAPROCK UNDER EACH STRUCTURE AT BASE.
10. TOP GRATE SHALL BE BOLTED DOWN TO FRAME.
11. ALL FRAMES AND GRATES SHALL BE GALVANIZED.

DETENTION BASIN OUTLET
(NOT TO SCALE)
[TOWN OF SOUTH WINDSOR STANDARD DETAIL]

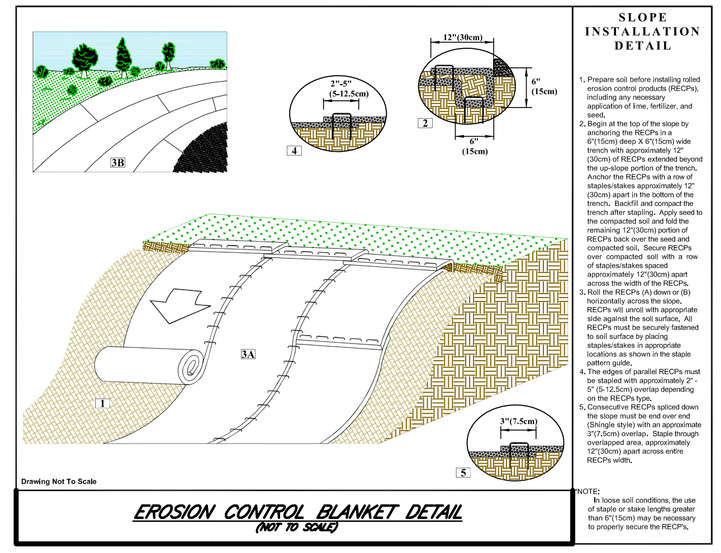

SLOPE INSTALLATION DETAIL
1. Prepare soil before installing rolled erosion control products (RECPs), including any necessary application of lime, fertilizer, and seed.
2. Begin at the top of the slope by anchoring the RECPs in a 6"(15cm) deep X 6"(15cm) wide trench with approximately 12" (30cm) of RECPs extending beyond the up-slope portion of the trench. Anchor the RECPs with a row of staples/stakes approximately 12" (30cm) apart in the bottom of the trench. Backfill and compact the trench after stapling. Apply seed to the compacted soil and fold the remaining 12"(30cm) portion of RECPs back over the seed and compacted soil. Secure RECPs over compacted soil with a row of staples/stakes spaced approximately 12"(30cm) apart across the width of the RECPs.
3. Roll the RECPs (A) down or (B) horizontally across the slope. RECPs will unroll with appropriate side against the soil surface. All RECPs must be installed in accordance to soil surface by placing staples/stakes in appropriate locations as shown in the staple pattern guide.
4. When using more parallel RECPs must be stapled with approximately 2"-5" (5-12.5cm) overlap depending on the RECPs type.
5. Consecutive RECPs spliced down the slope must be end over end (Shingle style) with an approximate 3" (7.5cm) overlap. Staple through overlapped area, approximately 12"(30cm) apart across entire RECPs width.

NOTE:
In loose soil conditions, the use of staple or stake lengths greater than 6"(15cm) may be necessary to properly secure the RECPs.

EROSION CONTROL BLANKET DETAIL
(NOT TO SCALE)

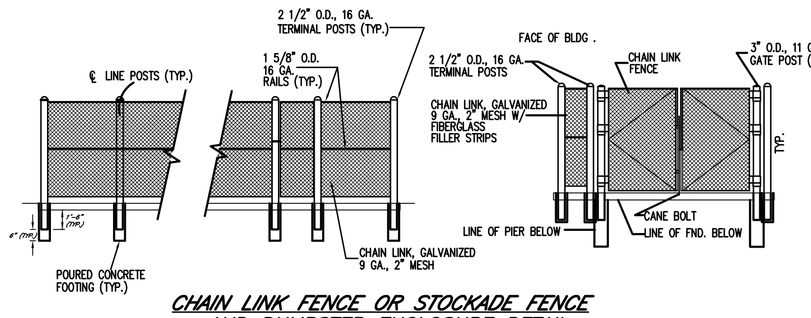

CHAIN LINK FENCE OR STOCKADE FENCE AND DUMPSTER ENCLOSURE DETAIL
NOT TO SCALE

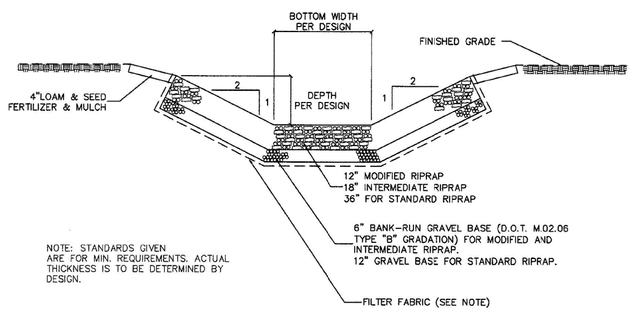

NOTE: STANDARDS GIVEN ARE FOR MIN. REQUIREMENTS. ACTUAL THICKNESS IS TO BE DETERMINED BY DESIGN.

NOTE:
FILTER FABRIC SHALL BE NONWOVEN AND SHALL MEET AASHTO M288-00, CLASS 2

RIPRAP DITCH
(NOT TO SCALE)
[TOWN OF SOUTH WINDSOR STANDARD DETAIL]

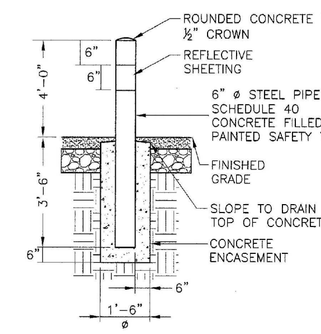

STEEL BOLLARD
(NOT TO SCALE)

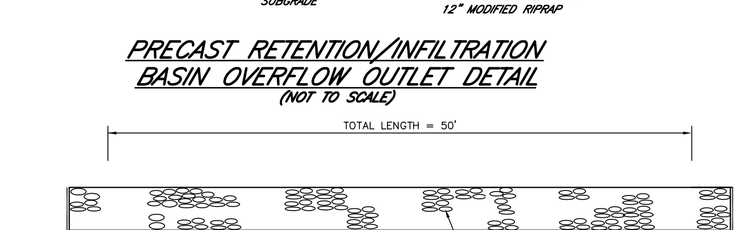

PRECAST RETENTION/INFILTRATION BASIN OVERFLOW OUTLET DETAIL
(NOT TO SCALE)

INSTALLATION PROCEDURE

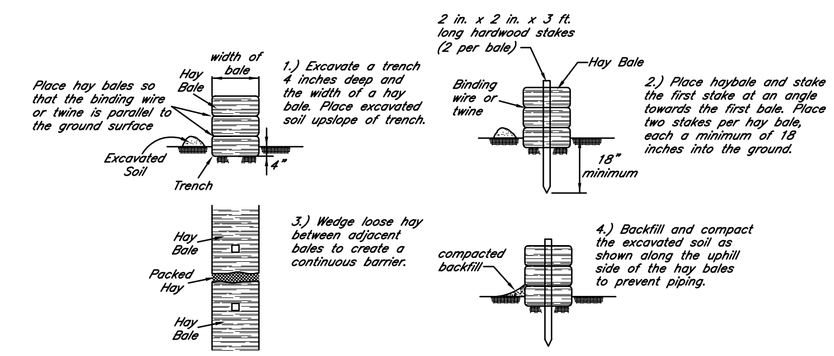

TYPICAL INSTALLATION IN A SWALE OR DRAINAGE WAY

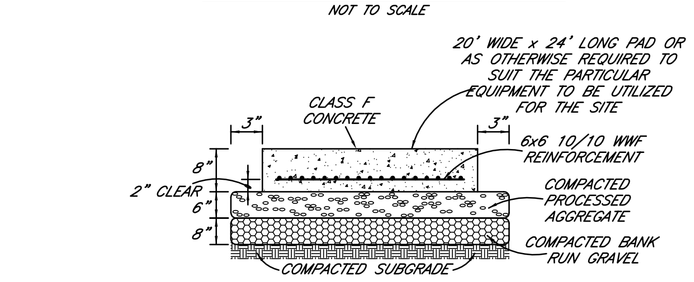

DUMPSTER PAD CROSS SECTION DETAIL
NOT TO SCALE

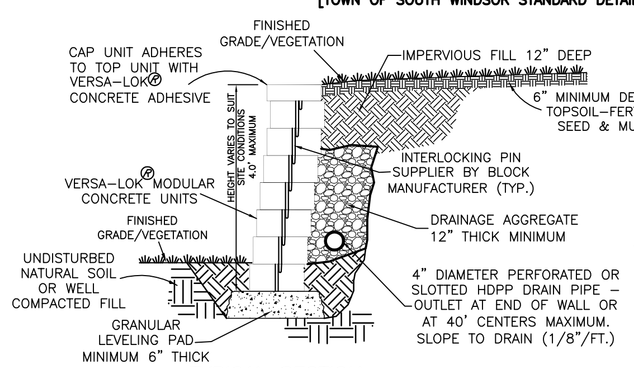

TYPICAL SECTION – UNREINFORCED RETAINING WALL
NOT TO SCALE
[BASED ON THE VERSA-LOK® RETAINING WALL SYSTEM]

STAKED HAY BALE SEDIMENT BARRIER INSTALLATION
NOT TO SCALE

SIGNS TO BE MOUNTED ON FACE OF BUILDING OR A SUITABLE POST, AS APPLICABLE

ACCESSIBLE PARKING SPACE SIGNS
(NOT TO SCALE)

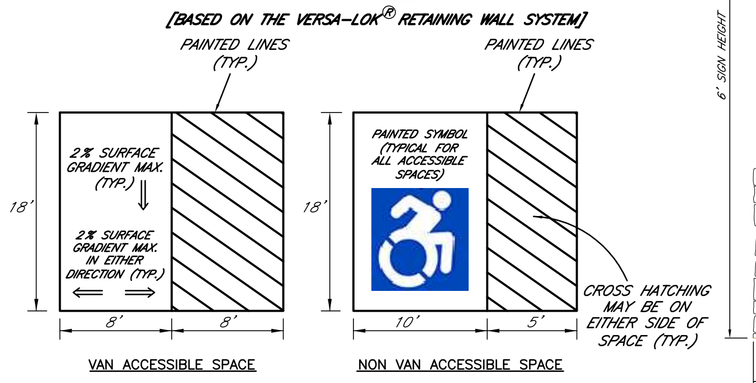

ACCESSIBLE PARKING SPACE REQUIREMENTS
(NOT TO SCALE)

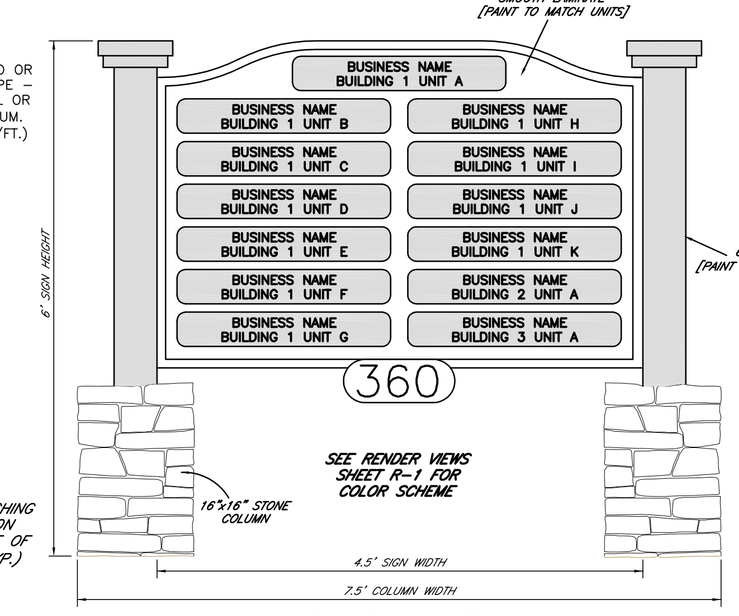

FACILITY SIGN DETAIL
NOT TO SCALE

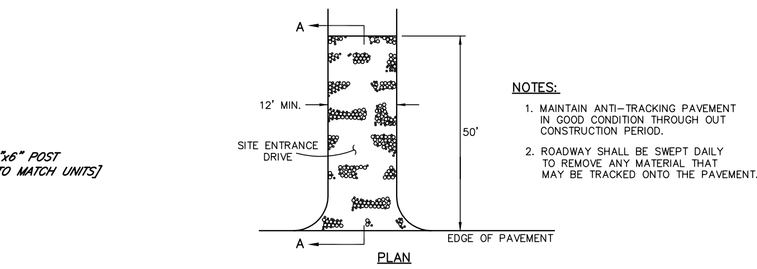

NOTES:
1. MAINTAIN ANTI-TRACKING PAVEMENT IN GOOD CONDITION THROUGH OUT CONSTRUCTION PERIOD.
2. ROADWAY SHALL BE SWEPT DAILY TO REMOVE ANY MATERIAL THAT MAY BE TRACKED ONTO THE PAVEMENT.

ANTI-TRACKING APRON (CONSTRUCTION ENTRANCE)
(NOT TO SCALE)

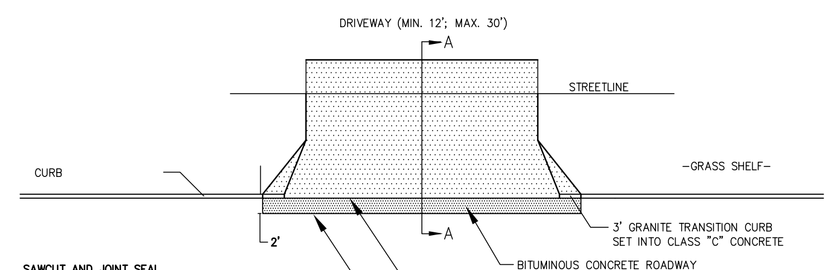

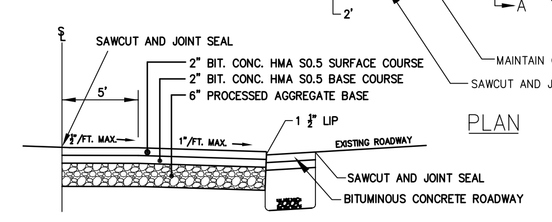

BITUMINOUS CONCRETE DRIVEWAY APRON
(NOT TO SCALE)

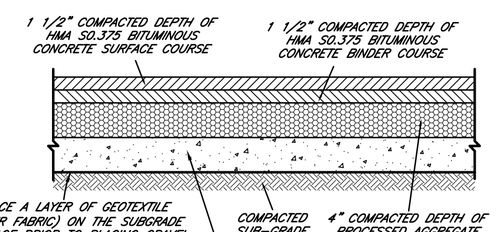

REGULAR PAVEMENT SECTION
NOT TO SCALE

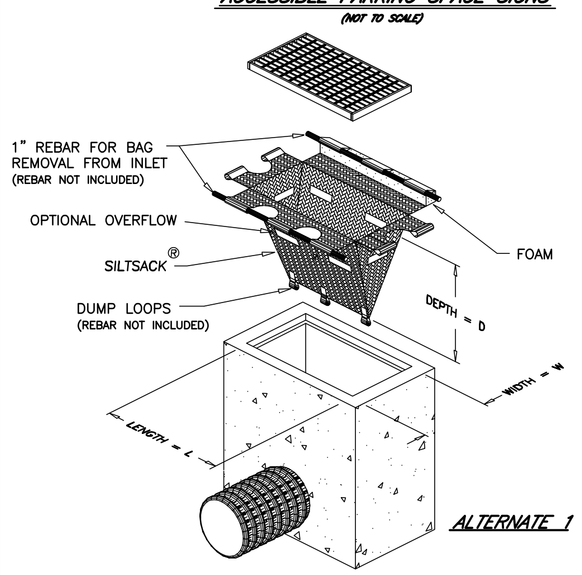

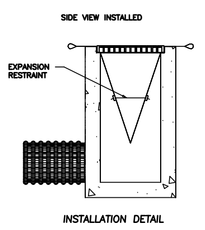

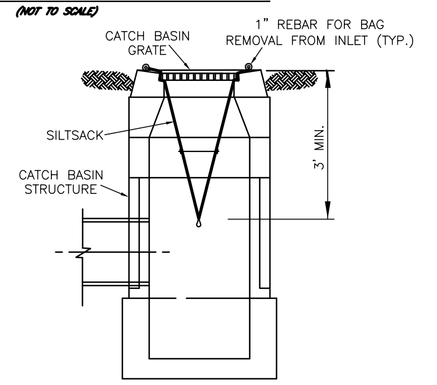

NOTES:
1. SILT SACKS SHALL BE HI-FLOW SILTSACK® 'TYPE A' FOR TYPE "C-L" CB TOPS AND 'TYPE B' WITH CURB DEFLECTORS FOR TYPE "C" CB TOPS OR OTHER STRUCTURES WITH CURB INLETS AS MANUFACTURED BY ACF ENVIRONMENTAL, INC OR APPROVED EQUAL.
2. SILT SACKS SHALL BE PROVIDED WITH INTERNAL OVERFLOWS.
3. SILT SACKS SHALL BE EMPTIED WHEN THEY HAVE COLLECTED 6" TO 12" OF SEDIMENT. INSPECT EVERY 1 TO 2 WEEKS AND AFTER EVERY MAJOR RAINFALL EVENT.

SILT SACK
NOT TO SCALE

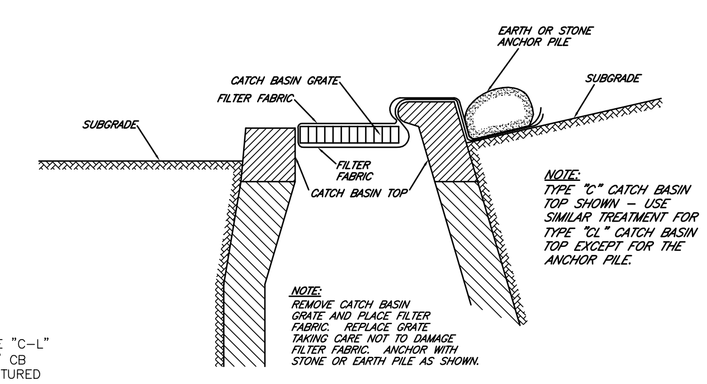

DETAILS OF SEDIMENT CONTROL AT CATCH BASINS
NOT TO SCALE

PROPERTY OWNER:
360 BURNHAM STREET, LLC
61 SCHOOL BROOK LANE
VERNON, CT 06066

APPLICANT:
360 BURNHAM STREET, LLC
61 SCHOOL BROOK LANE
VERNON, CT 06066
(860)-803-1859

DETAIL SHEET
SHOWING PROPERTY OF:
360 BURNHAM STREET, LLC
PREPARED FOR:
360 BURNHAM STREET, LLC
360 BURNHAM STREET
SOUTH WINDSOR, CONNECTICUT

RAYMOND F. NELSON, JR., P.E.
CIVIL ENGINEER
P.O. BOX 173
VERNON ROCKVILLE, CT 06066-0173
rfnelsonjr.pe@gmail.com

REV.	DATE	DESCRIPTION
1	04-15-2020	ADDRESS TOWN REVIEW COMMENTS

COPYRIGHT © 2019
MESSIER SURVEY LLC
LAND SURVEYORS
THESE DRAWINGS ARE THE PROPERTY OF THE SURVEYOR AND HAVE BEEN PREPARED SPECIFICALLY FOR THE OWNER FOR THIS PROJECT AT THIS SITE, AND ARE NOT TO BE USED FOR ANY OTHER PURPOSE, LOCATION, OR OWNER WITHOUT WRITTEN CONSENT OF THE SURVEYOR.
NO DECLARATION IS EXPRESSED OR IMPLIED UNLESS THIS PLAN BEARS THE EMBOSSED SEAL OF THE LAND SURVEYOR WHOSE SIGNATURE APPEARS HEREON.

(COMP. FILE = 19-010-DETAIL SHEETS.DWG)
DATE : 09/19
SCALE : AS NOTED
DRAWN : DAS
CHECK : RFN
SHEET 11 OF 12
PROJECT No. 19-023
PLAN No. 19-010DS