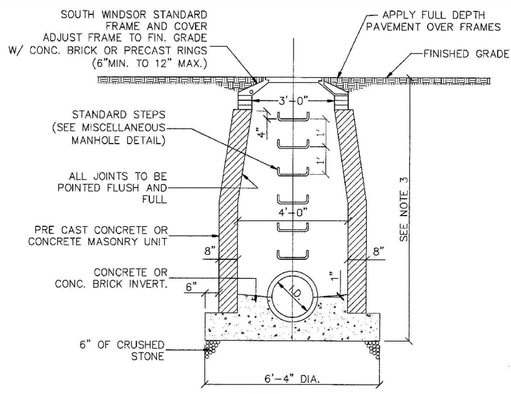

NOTES:
1. MINIMUM COVER OVER TOP OF PIPE SHALL BE 2'-0".
2. WALL THICKNESS SHALL BE SUFFICIENT TO MEET HS 20 LOADING.
3. WALL THICKNESS FOR STRUCTURES OVER 10' HIGH IS 12" FOR CONCRETE BLOCK UNITS. INSIDE DIMENSIONS REMAIN THE SAME.
4. ALL PIPES SHALL BE CUT FLUSH WITH INSIDE WALLS.

STORM MANHOLE
(NOT TO SCALE)
[TOWN OF SOUTH WINDSOR STANDARD DETAIL]

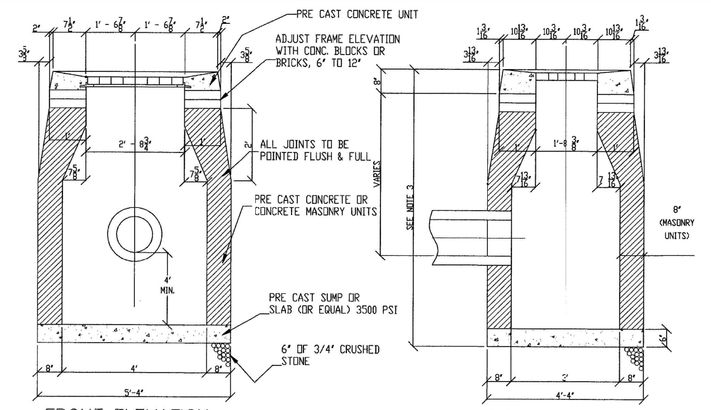

NOTES:
1. MINIMUM COVER OVER TOP OF PIPE SHALL BE 2'-0".
2. WALL THICKNESS SHALL BE SUFFICIENT TO MEET HS-20 LOADING.
3. WALL THICKNESS FOR STRUCTURES OVER 10' HIGH IS 12" FOR CONCRETE BLOCK UNITS. INSIDE DIMENSIONS REMAIN THE SAME.
4. ALL PIPES SHALL BE CUT FLUSH WITH INSIDE WALLS.
5. ALL BRICKS SHALL BE CONCRETE.
6. ALL PIPE PENETRATIONS SHALL BE PARGED SMOOTH TO PROVIDE A WATERTIGHT SEAL BOTH INSIDE AND OUTSIDE THE BASIN.
7. INSIDE WALLS OF STRUCTURE TO BE SMOOTH. NO SHELVES ALLOWED.
8. IF 4' SUMP IS NOT POSSIBLE DUE TO UTILITY CONFLICTS OR SITE CONSTRAINTS, A 2' SUMP MAY BE SUBMITTED FOR THE TOWN ENGINEERS APPROVAL.
9. FRAME AND GRATE SHALL BE GALVANIZED.

NOT TO SCALE

TYPE "C-L" CATCH BASIN
(NOT TO SCALE)
[TOWN OF SOUTH WINDSOR STANDARD DETAIL]

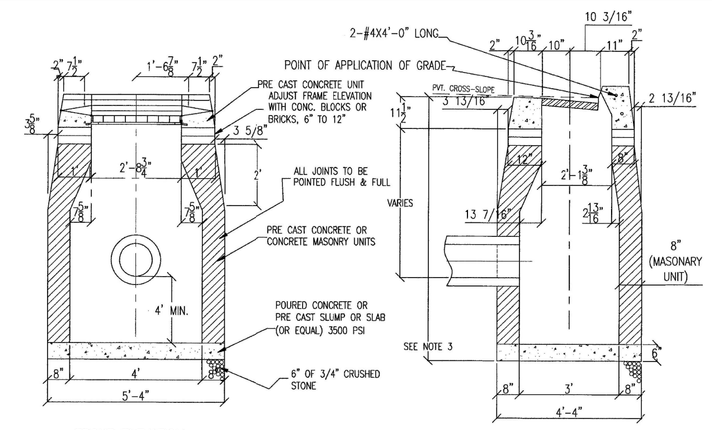

NOTES:
1. MINIMUM COVER OVER TOP OF PIPE SHALL BE 2'-0".
2. WALL THICKNESS SHALL BE SUFFICIENT TO MEET HS-20 LOADING.
3. WALL THICKNESS FOR STRUCTURES OVER 10' HIGH IS 12" FOR CONCRETE BLOCK UNITS. INSIDE DIMENSIONS REMAIN THE SAME.
4. ALL PIPES SHALL BE CUT FLUSH WITH INSIDE WALLS.
5. ALL BRICKS SHALL BE CONCRETE.
6. ALL PIPE PENETRATIONS SHALL BE PARGED SMOOTH TO PROVIDE A WATERTIGHT SEAL BOTH INSIDE AND OUTSIDE THE BASIN.
7. INSIDE WALLS OF STRUCTURE TO BE SMOOTH. NO SHELVES ALLOWED.
8. IF 4' SUMP IS NOT POSSIBLE DUE TO UTILITY CONFLICTS OR SITE CONSTRAINTS, A 2' SUMP MAY BE SUBMITTED FOR THE TOWN ENGINEERS APPROVAL.
9. FRAME AND GRATE SHALL BE GALVANIZED.

NOT TO SCALE

TYPE "C" CATCH BASIN
(NOT TO SCALE)
[TOWN OF SOUTH WINDSOR STANDARD DETAIL]

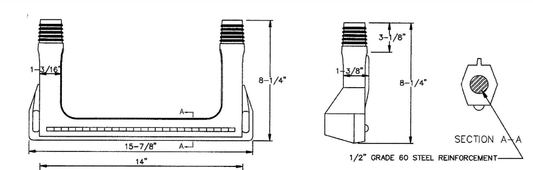

PLASTIC OR FIBERGLASS MANHOLE STEP

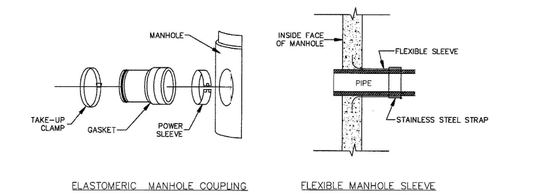

ELASTOMERIC MANHOLE COUPLING — FLEXIBLE MANHOLE SLEEVE

MANHOLE PIPE CONNECTIONS

MISCELLANEOUS MANHOLE DETAILS
(NOT TO SCALE)
[TOWN OF SOUTH WINDSOR STANDARD DETAIL]

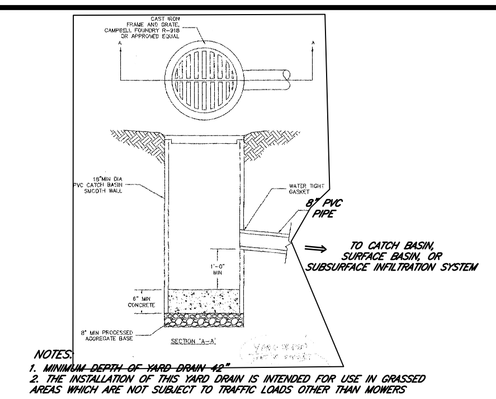

NOTES:
1. MINIMUM DEPTH OF YARD DRAIN 18"
2. THE INSTALLATION OF THIS YARD DRAIN IS INTENDED FOR USE IN GRASSED AREAS WHICH ARE NOT SUBJECT TO TRAFFIC LOADS OTHER THAN MOWERS

YARD DRAIN DETAIL
(NOT TO SCALE)

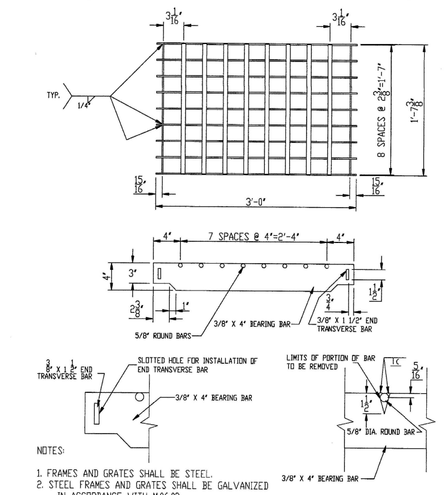

NOTES:
1. FRAMES AND GRATES SHALL BE STEEL.
2. STEEL FRAMES AND GRATES SHALL BE GALVANIZED IN ACCORDANCE WITH M36.03.
3. ALL METAL UNITS SUBJECT TO MANUFACTURING TOLERANCES.
4. ONLY LOW HYDROGEN ELECTRODES SHALL BE USED.
5. DIMENSIONAL TOLERANCES MAY BE +/- 1/16".
6. WELDING WILL BE PERFORMED IN ACCORDANCE WITH THE STANDARD SPECIFICATIONS FOR ROADS, BRIDGES AND INCIDENTAL CONSTRUCTION.
7. ALL BARS SHALL BE WELDED AT ALL INTERSECTIONS

NOT TO SCALE

TYPE "A" GRATE DETAIL
(NOT TO SCALE)
[TOWN OF SOUTH WINDSOR STANDARD DETAIL]

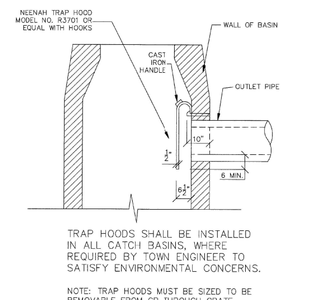

TRAP HOODS SHALL BE INSTALLED IN ALL CATCH BASINS, WHERE REQUIRED BY TOWN ENGINEER TO SATISFY ENVIRONMENTAL CONCERNS.

NOTE: TRAP HOODS MUST BE SIZED TO BE REMOVABLE FROM CB THROUGH GRATE OPENING FROM ABOVE.

TRAP HOOD DETAIL
(NOT TO SCALE)
[TOWN OF SOUTH WINDSOR STANDARD DETAIL]

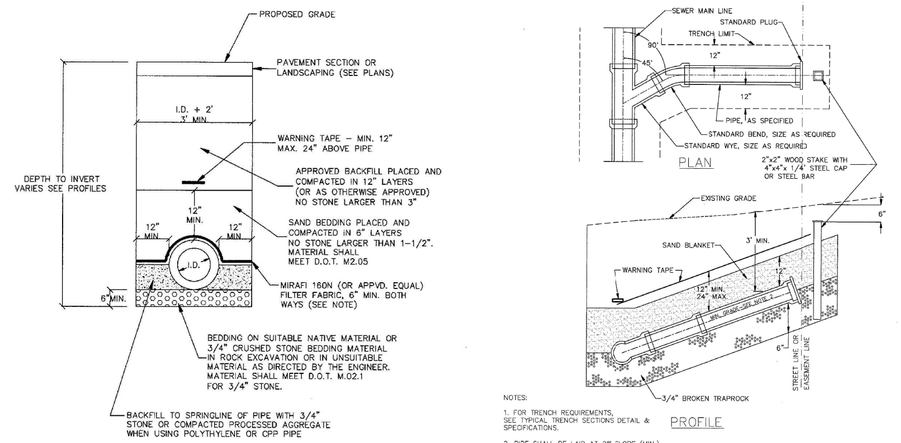

STORM DRAIN TRENCH DETAIL
(NOT TO SCALE)
[TOWN OF SOUTH WINDSOR STANDARD DETAIL]

NOTES:
1. FOR TRENCH REQUIREMENTS, SEE TYPICAL TRENCH SECTIONS DETAIL & SPECIFICATIONS.
2. PIPE SHALL BE LAID AT 2% SLOPE (MIN.) UNLESS OTHERWISE SPECIFIED OR WHERE A HARDSHIP WOULD BE CREATED THEN PIPE MAY BE LAID TO A GRADE OF NOT LESS THAN 1%.

TYPICAL BUILDING SEWER
(NOT TO SCALE)
[TOWN OF SOUTH WINDSOR STANDARD DETAIL]

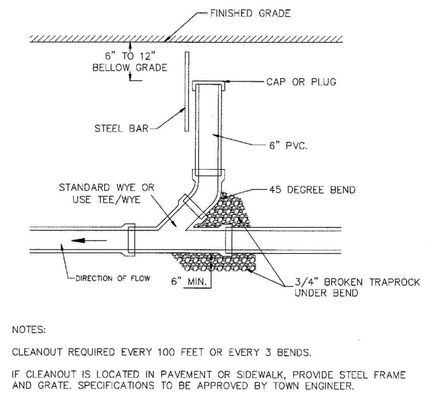

NOTES:
CLEANOUT REQUIRED EVERY 100 FEET OR EVERY 3 BENDS.
IF CLEANOUT IS LOCATED IN PAVEMENT OR SIDEWALK, PROVIDE STEEL FRAME AND GRATE. SPECIFICATIONS TO BE APPROVED BY TOWN ENGINEER.

TYPICAL SANITARY SEWER CLEANOUT
(NOT TO SCALE)
[TOWN OF SOUTH WINDSOR STANDARD DETAIL]

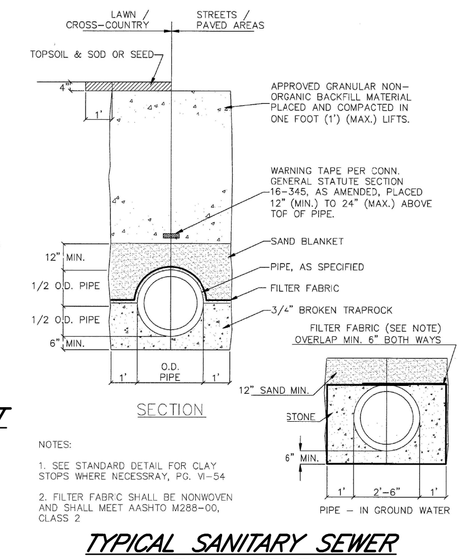

NOTES:
1. SEE STANDARD DETAIL FOR CLAY STOPS WHERE NECESSARY, PG. VI-54
2. FILTER FABRIC SHALL BE NONWOVEN AND SHALL MEET AASHTO M288-00, CLASS 2

TYPICAL SANITARY SEWER TRENCH SECTION
(NOT TO SCALE)
[TOWN OF SOUTH WINDSOR STANDARD DETAIL]

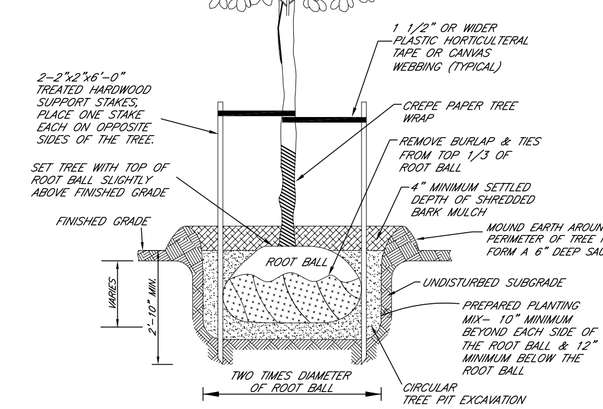

DECIDUOUS TREE PLANTING DETAIL
NOT TO SCALE

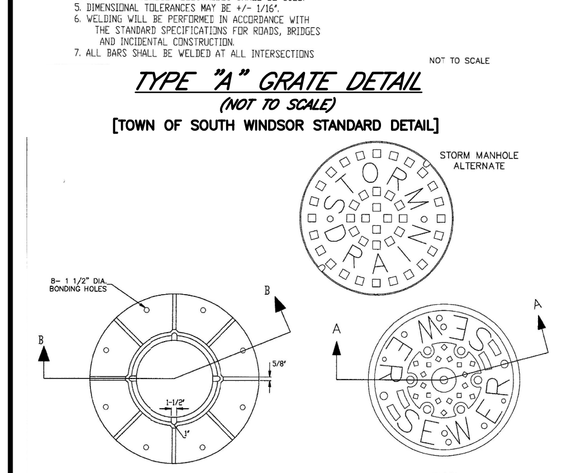

NOTES:
1. THE LOWER SURFACE OF THE COVER AND THE CORRESPONDING UPPER SURFACE OF THE FRAME SHALL BE MACHINE FINISHED TO PROVIDE A SMOOTH FLAT CONTACT OR FIT, WITHOUT ANY TENDENCY FOR THE COVER TO ROCK OR RATTLE.
2. SANITARY SEWER MANHOLES SHALL BE EQUIPPED WITH VENT HOLE IN CENTER.

CAST IRON MANHOLE FRAME AND COVER
(NOT TO SCALE)
[TOWN OF SOUTH WINDSOR STANDARD DETAIL]

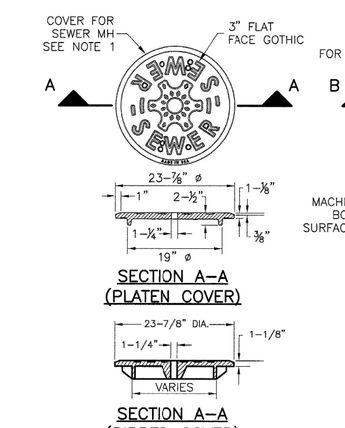

NOTES:
1. MANHOLES COVERS MAY BE DESIGN WITH OR WITHOUT RIBS. THE TOP SURFACE OF THE MANHOLE COVER SHALL BE FLAT. THE BOTTOM SURFACE MAY OR MAY NOT BE FLAT.
2. PROVIDE ALTERNATIVE INSCRIPTION 'STORM DRAIN' WHEN SPECIFIED.
3. THE LOWER SURFACE OF THE COVER AND THE CORRESPONDING UPPER SURFACE OF THE FRAME SHALL BE MACHINE FINISHED TO PROVIDE A SMOOTH FLAT CONTACT OR FIT WITHOUT ANY TENDENCY FOR THE COVER OR GRATE TO ROCK OR RATTLE. THE GAP BETWEEN THE COVER/GRATE AND FRAME SHALL BE NO MORE THAN 1/8" ALL AROUND.

STANDARD MANHOLE COVERS
(NOT TO SCALE)
[METROPOLITAN DISTRICT STANDARD DETAIL]

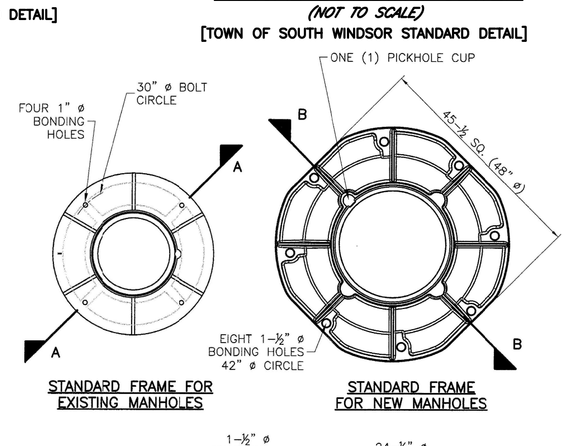

STANDARD MANHOLE FRAMES
(NOT TO SCALE)
[METROPOLITAN DISTRICT STANDARD DETAIL]

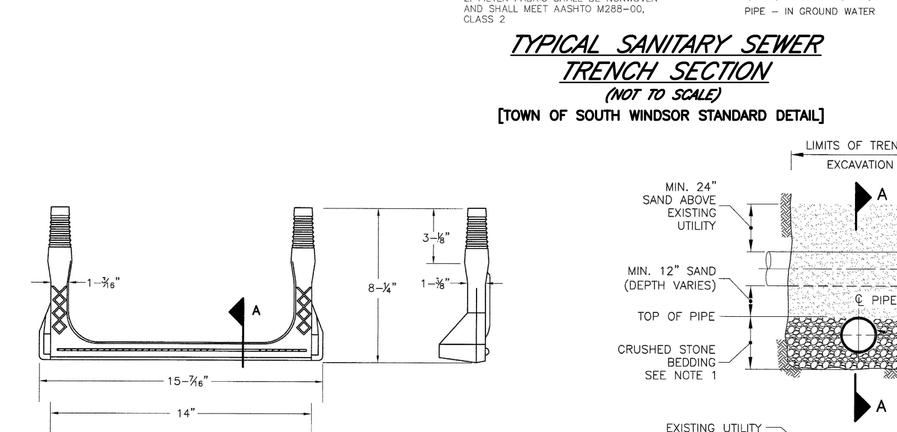

PLASTIC STEP FOR PRECAST CONCRETE MANHOLE
(NOT TO SCALE)
[METROPOLITAN DISTRICT STANDARD DETAIL]

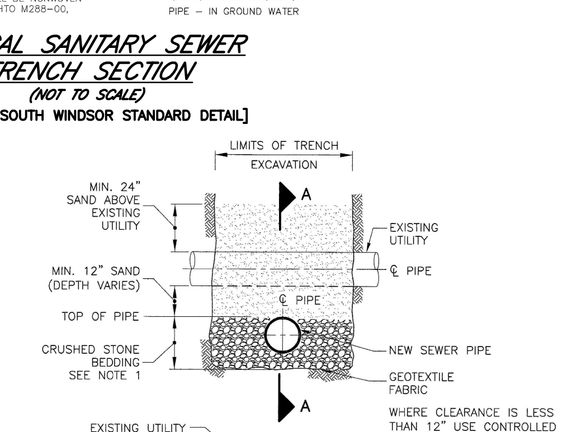

NOTES:
1. CRUSHED STONE SHALL BE INSTALLED TO TOP OF PIPE FOR PVC AND DI PIPE AND TO SPRINGLINE FOR RC PIPE.
2. REFER TO SEWER TRENCH DETAIL FOR BACKFILLING AND RESTORATION REQUIREMENTS.

EXISTING GAS OR WATER UTILITY CROSSING
(NOT TO SCALE)
[METROPOLITAN DISTRICT STANDARD DETAIL]

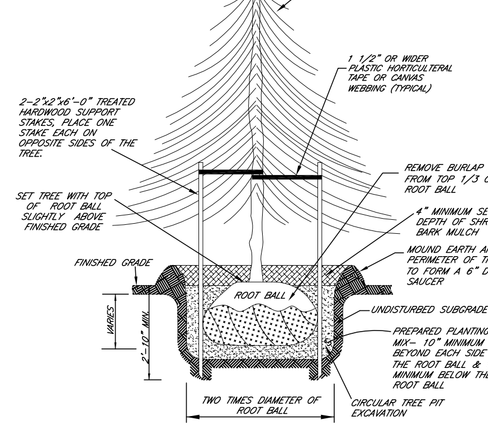

EVERGREEN TREE PLANTING DETAIL
NOT TO SCALE

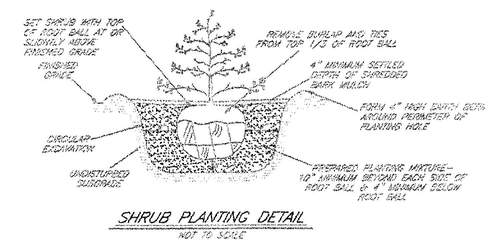

SHRUB PLANTING DETAIL
NOT TO SCALE

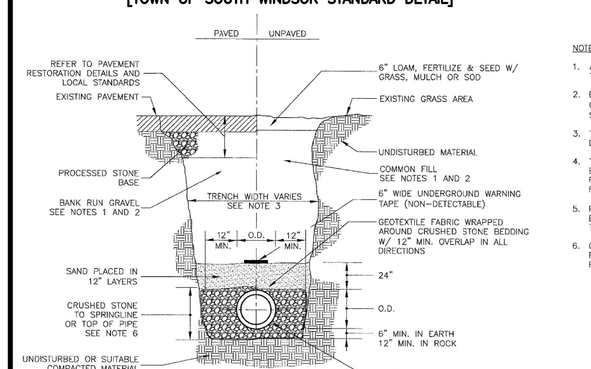

SEWER TRENCH
(NOT TO SCALE)
[METROPOLITAN DISTRICT STANDARD DETAIL]

NOTES:
1. ALL EXCAVATED MATERIAL SHALL BE REMOVED FROM THE SITE AND DISPOSED.
2. BACKFILL MATERIAL SHALL BE APPROVED BANK RUN GRAVEL IN PAVED AREAS (INCLUDING DRIVEWAYS AND SIDEWALKS) OR COMMON FILL IN UNPAVED AREAS.
3. TRENCH WIDTH VARIES BASED ON PIPE SIZE AND DEPTH.
4. TRENCHES LOCATED IN THE ROAD SHOULDER SHALL BE TREATED THE SAME AS TRENCHES IN THE PAVED ROADWAY EXCEPT FOR PAVEMENT AND SURFACE RESTORATION WORK.
5. PROVIDE IMPERVIOUS TRENCH DAM(S) IN STONE BEDDING AS DIRECTED BY THE ENGINEER. SEE PIPE TRENCH DAM DETAIL.
6. CRUSHED STONE SHALL BE INSTALLED TO TOP OF PIPE FOR PVC AND DI PIPE AND TO SPRINGLINE FOR RC PIPE.

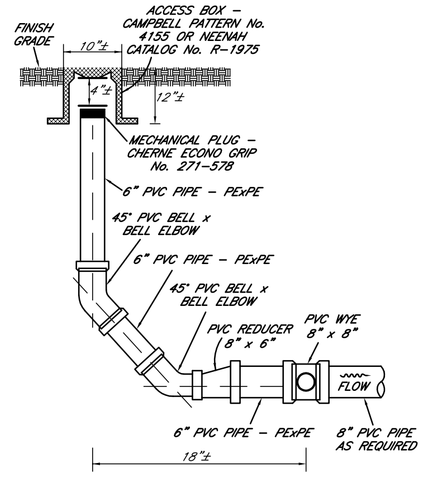

PVC STORM DRAIN CLEANOUT
NOT TO SCALE

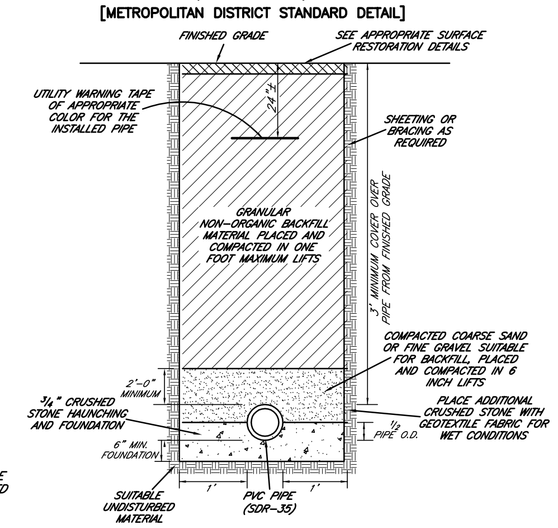

TYPICAL PVC PIPE TRENCH DETAIL
NOT TO SCALE

PROPERTY OWNER:
360 BURNHAM STREET, LLC
61 SCHOOL BROOK LANE
VERNON, CT 06066

APPLICANT:
360 BURNHAM STREET, LLC
61 SCHOOL BROOK LANE
VERNON, CT 06066
(860)-803-1859

RAYMOND F. NELSON, JR., P.E.
CIVIL ENGINEER
P.O. BOX 173
VERNON ROCKVILLE, CT 06066-0173
rfnelsonjr.pe@gmail.com

REV.	DATE	DESCRIPTION
1	04-15-2020	ADDRESS TOWN REVIEW COMMENTS

DETAIL SHEET

SHOWING PROPERTY OF:
360 BURNHAM STREET, LLC
PREPARED FOR:
360 BURNHAM STREET, LLC
360 BURNHAM STREET
SOUTH WINDSOR, CONNECTICUT

COPYRIGHT © 2019
MESSIER SURVEY LLC
LAND SURVEYORS
THESE DRAWINGS ARE THE PROPERTY OF THE SURVEYOR AND HAVE BEEN PREPARED SPECIFICALLY FOR THE OWNER FOR THIS PROJECT AT THIS SITE AND ARE NOT TO BE USED FOR ANY OTHER PURPOSE, LOCATION, OR OWNER WITHOUT WRITTEN CONSENT OF THE SURVEYOR.
NO DECLARATION IS EXPRESSED OR IMPLIED UNLESS THIS PLAN BEARS THE EMBOSSED SEAL OF THE LAND SURVEYOR WHOSE SIGNATURE APPEARS HEREON.

(COMP. FILE = 19-010-DETAIL SHEETS.DWG)

DATE : 08/19
SCALE : AS NOTED
DRAWN : DAS
CHECK : RFN
SHEET 10 OF 12

PROJECT No. 19-023
PLAN No. 19-010DS