67 KENNEDY ROAD WAREHOUSE & DISTRIBUTION CENTER

SITE PLAN / RESUBDIVISION

352 SULLIVAN AVENUE, 67 & 68 KENNEDY ROAD ~ SOUTH WINDSOR ~ CT

GIS NOs. 87300352, 49800067, & 49800068

N/F 500' ABUTTERS

STREET ADDRESS	OWNER	PARCEL ID
30 KENNEDY ROAD	WOODCOCK JOHN J JR TR	49800030
40 KENNEDY ROAD	456 SULLIVAN AVE LLC	49800040
46 KENNEDY ROAD	LAWSONS PROPERTIES LLC	49800046
138 RYE STREET	SHEPARD POLA INC	78600138
140 RYE STREET	SHEPARD POLA INC	78600140
250 RYE STREET	ALTATWO REALTY COMPANY LLC	78600250
300 RYE STREET	ALTA REALTY COMPANY LLC	78600300
1 SCHWEIR ROAD	KUHNS FAMILY PROPERTIES LLC	81300001
22 SCHWEIR ROAD	WOLF & GUERRA LLC	81300022
26 SCHWEIR ROAD	MISCELLANEOUS STEEL & RAIL LLC	81300026
280 SULLIVAN AVENUE	280 SULLIVAN AVENUE LLC	87300280
283 SULLIVAN AVENUE	DELLA N LLC/LEGACY VENTURES LLC	87300283
305 SULLIVAN AVENUE	WOLF HELMAR	87300305
329 SULLIVAN AVENUE	WOLF & GUERRA LLC	87300329
330 SULLIVAN AVENUE	JKLN LLC	87300330
349 SULLIVAN AVENUE	WOLF & GUERRA LLC	87300349
405 SULLIVAN AVENUE	KUHNS FAMILY PROPERTIES LLC	87300405
425 SULLIVAN AVENUE	CONDOR PROPERTIES LLC	87300425
455 SULLIVAN AVENUE	PARKSITE INC	87300455
472 SULLIVAN AVENUE	CURRENT RESIDENT	87300472
222 TROY ROAD	CURRENT RESIDENT	90000222

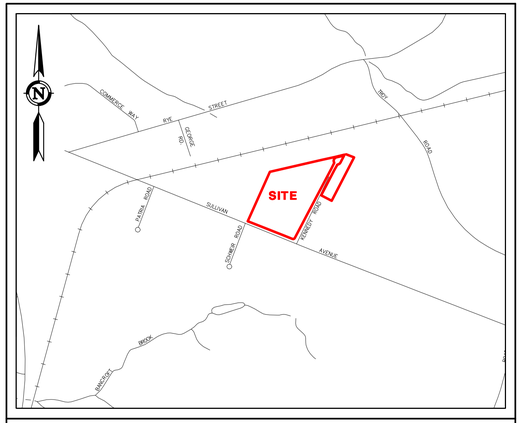

LOCATION MAP
SCALE: 1"=1,000'

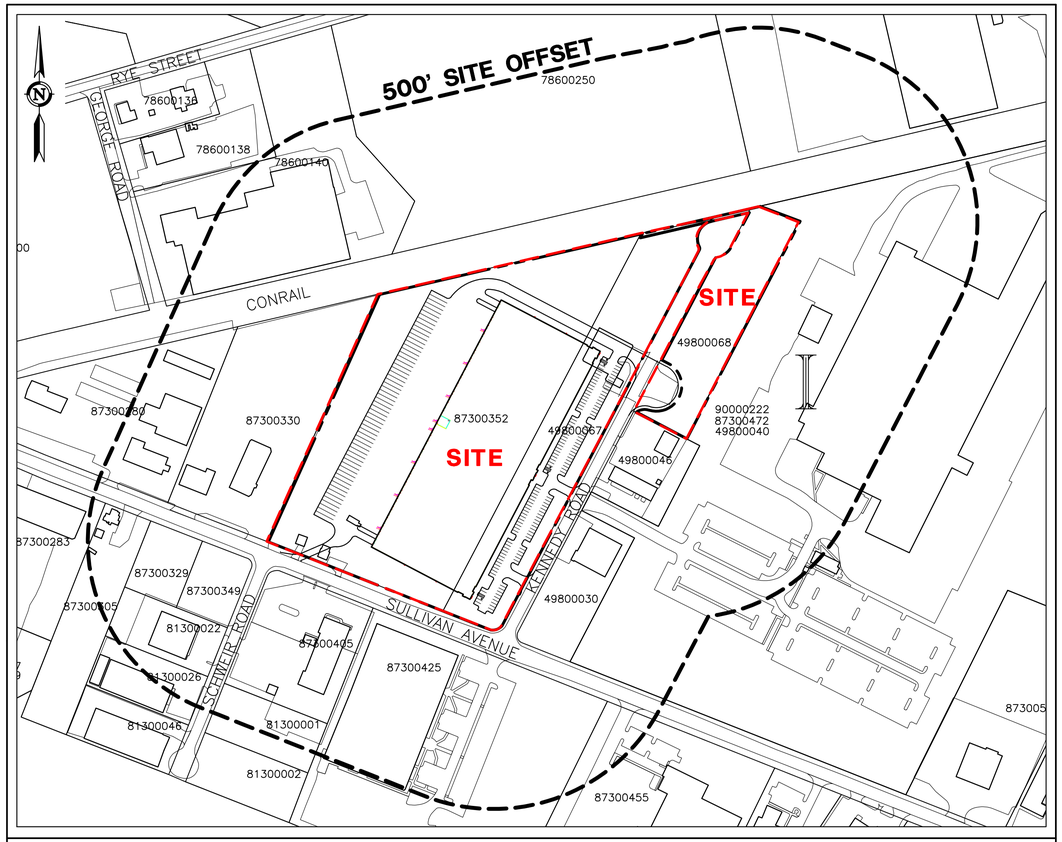

KEY MAP
SCALE: 1"=200'

SHEET INDEX

C-T1	COVER SHEET	1 of 24
C-OS1	OVERALL SITE PLAN	2 of 24
C-SP1 - C-SP2	SITE PLAN	3-4 of 24
C-GD1 - C-GD2	GRADING PLAN	5-6 of 24
C-DR1 - C-DR2	DRAINAGE PLAN	7-8 of 24
C-UT1 - C-UT2	UTILITY PLAN	9-10 of 24
C-ES1 - C-ES2	EROSION & SEDIMENTATION PLAN	11-12 of 24
C-ES3	EROSION & SEDIMENTATION NOTES & DETAILS	13 of 24
C-LS1 - C-LS2	LANDSCAPE PLAN	14-15 of 24
C-LS3	LANDSCAPE NOTES & DETAILS	16 of 24
C-LT1 - C-LT2	LIGHTING PLAN	17-18 of 24
C-D1	NOTES, DETAILS, & LEGEND	19 of 24
C-D2 - C-D6	DETAILS	20-24 of 24
V-1 TO V-3	PROPERTY & TOPOGRAPHIC SURVEY	1-3 of 3
RS-1 - RS-2	PROPERTY SURVEY / RESUBDIVISION PLAN	1-2 of 2

PRELIMINARY
NOT FOR CONSTRUCTION
THESE PLANS ARE FOR PLANNING PURPOSES ONLY INTENDED TO SECURE REGULATORY APPROVALS. ONLY FINAL PLANS STAMPED APPROVED BY THE TOWN SHALL BE USED FOR CONSTRUCTION PURPOSES.

GENERAL NOTES:

- THESE PLANS ARE INVALID UNLESS THEY BEAR THE SEAL OR STAMP, AND ORIGINAL SIGNATURE OF THE PROFESSIONAL ENGINEER, LAND SURVEYOR, OR LANDSCAPE ARCHITECT.
- REPRODUCTION TECHNIQUES USED IN THE PRODUCTION OF THIS PLAN CAN STRETCH OR SHRINK THE PAPER. SCALING OF THIS DRAWING MAY BE INACCURATE. CONTACT DPI IF ADDITIONAL INFORMATION IS REQUIRED.
- THESE PLANS AND OTHER ITEMS PREPARED BY DESIGN PROFESSIONALS, INC. (DPI) ARE INSTRUMENTS OF SERVICE AND REMAIN ITS PROPERTY. THE USE OF THESE ITEMS BY DPI'S CLIENT IS SUBJECT TO THE TERMS SET FORTH IN THE AGREEMENT BETWEEN CLIENT AND DPI. REPRODUCTION AND/OR USE OF THESE ITEMS BY OTHERS IS PROHIBITED WITHOUT THE WRITTEN CONSENT OF DPI.

CIVIL ENGINEER, LANDSCAPE ARCHITECT & LAND SURVEYOR:

design professionals INC

CIVIL & TRAFFIC ENGINEERS / LAND SURVEYORS
PLANNERS / LANDSCAPE ARCHITECTS

21 Jeffrey Drive
P.O. Box 1167
South Windsor, CT 06074

Phone: 860-291-8755
Fax: 860-291-8757
www.designprofessionalsinc.com

PROPERTY OWNER:
FOUR WOODS LLC
C/O JOHN J WOODCOCK III
89 SADDLEBACK DRIVE
SOUTH WINDSOR, CT 06074

APPLICANT:
SCANNELL PROPERTIES #644, LLC
294 GROVE LANE EAST
SUITE 140
WAYZATA, MN 55391
(763) 331-8851

Copyright © 2022 Design Professionals, Inc. — All Rights Reserved

21 JEFFREY DRIVE
P.O. BOX 1167
SOUTH WINDSOR, CT 06074
860-291-8755 – T
860-291-8757 – F
www.designprofessionalsinc.com

design professionals INC
CIVIL & TRAFFIC ENGINEERS / LAND SURVEYORS
PLANNERS / LANDSCAPE ARCHITECTS

• The plans, maps, plans, or other items prepared by Design Professionals, Inc. (DPI) are instruments of service and remain the property of DPI. The use of these items by DPI's client is subject to the terms set forth in the agreement between client and DPI. Additional use of these items by others is prohibited without the written consent of DPI.

• Reproduction techniques used in the production of this plan can stretch or shrink the paper. Scaling of this plan can stretch or shrink the paper. Scaling of this drawing may be inaccurate. Contact DPI if additional information is required.

• This plan and other plans prepared by Design Professionals, Inc. (DPI) are instruments of service and remain its property. The use of these items by DPI's client is subject to the terms set forth in the agreement between client and DPI. Reproduction and/or use of these items by others is prohibited without the written consent of DPI.

PREPARED FOR:
Scannell Properties #644, LLC
294 Grove Lane East
Suite 140
Wayzata, MN 55391
763-331-8851 T

PROJECT NO.	4670
DATE	3/30/2022
DESIGNED BY	CHH/BPW
DRAWN BY	CHH/BPW
CHECKED BY	BPW

67 KENNEDY ROAD WAREHOUSE & DISTRIBUTION CENTER
352 SULLIVAN AVENUE, 67 & 68 KENNEDY ROAD
SOUTH WINDSOR, CONNECTICUT 06074
GIS NOs. 87300352, 49800067, & 49800068

REVISIONS

NO.	DATE		BY

TITLE

SHEET
C-T1
SHEET 1 OF 24

File: C:\jobs\4670\Engineering\AutoCAD\4670 Cover Sheet.dwg Layout: 01 C-T1 Plotted: 3/30/2022 9:15 AM Last Saved: 3/30/2022 9:15 AM Last Saved By: benwheeler

ZONING TABLE

ZONE: INDUSTRIAL ZONE (I)

ITEM	REQUIRED/ ALLOWED	PROPOSED
LOT AREA	30,000 SF	838,308 SF (19.245 AC)
LOT FRONTAGE	100'	1,989.6'
LOT DEPTH	150'	691.7'
FRONT YARD	50' / 35' (1)	60.0'
SIDE YARD	10'	91.4'
REAR YARD	25'	N/A
BUILDING HEIGHT	40'/2 STORIES	<40'
PARKING	SEE BELOW (2)	140
INTERIOR LANDSCAPING	10%	10.2%
LOT COVERAGE	50%	28.8%
IMPERVIOUS COVERAGE	65%	54.6%

NOTES:
(1) 50' ALONG SULLIVAN AVENUE AND 35' ALONG KENNEDY ROAD
(2) ASSUME 10,000 SF OF OFFICE SPACE x 4.5 SPACES PER 1,000 SF = 45.5 SPACES REQUIRED
231,800 SF OF WAREHOUSE x 1 SPACE PER 1,250 SF = 185.4 SPACES REQUIRED
TOTAL 231 TOTAL SPACES REQUIRED (141 SPACES PROVIDED)
91 PARKING SPACES WILL BE REQUIRED TO BE SHOWN AS RESERVED (FUTURE) PARKING
(3) 5 PARKING SPACES ARE REQUIRED TO HAVE LEVEL 2 EV CHARGING STATIONS
AN ADDITIONAL 9 SPACES ARE REQUIRED TO BE WIRED FOR FUTURE EV STATIONS

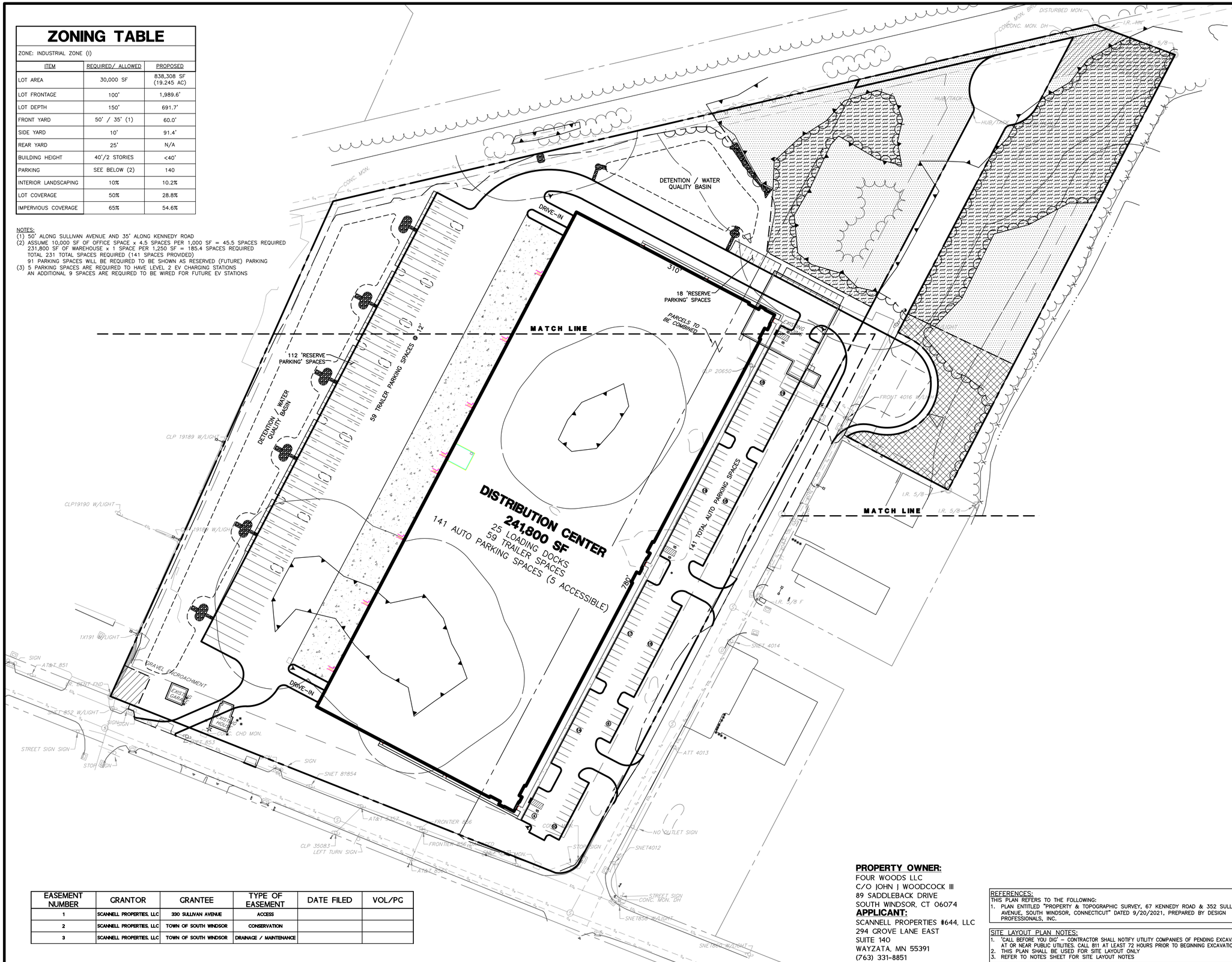

EASEMENT NUMBER	GRANTOR	GRANTEE	TYPE OF EASEMENT	DATE FILED	VOL/PG
1	SCANNELL PROPERTIES, LLC	330 SULLIVAN AVENUE	ACCESS		
2	SCANNELL PROPERTIES, LLC	TOWN OF SOUTH WINDSOR	CONSERVATION		
3	SCANNELL PROPERTIES, LLC	TOWN OF SOUTH WINDSOR	DRAINAGE / MAINTENANCE		

PROPERTY OWNER:
FOUR WOODS LLC
C/O JOHN J WOODCOCK III
89 SADDLEBACK DRIVE
SOUTH WINDSOR, CT 06074

APPLICANT:
SCANNELL PROPERTIES #644, LLC
294 GROVE LANE EAST
SUITE 140
WAYZATA, MN 55391
(763) 331-8851

REFERENCES:
THIS PLAN REFERS TO THE FOLLOWING:
1. PLAN ENTITLED "PROPERTY & TOPOGRAPHIC SURVEY, 67 KENNEDY ROAD & 352 SULLIVAN AVENUE, SOUTH WINDSOR, CONNECTICUT" DATED 9/20/2021, PREPARED BY DESIGN PROFESSIONALS, INC.

SITE LAYOUT PLAN NOTES:
1. "CALL BEFORE YOU DIG" – CONTRACTOR SHALL NOTIFY UTILITY COMPANIES OF PENDING EXCAVATION AT OR NEAR PUBLIC UTILITIES. CALL 811 AT LEAST 72 HOURS PRIOR TO BEGINNING EXCAVATION.
2. THIS PLAN SHALL BE USED FOR SITE LAYOUT ONLY
3. REFER TO NOTES SHEET FOR SITE LAYOUT NOTES

design professionals
CIVIL & TRAFFIC ENGINEERS / LAND SURVEYORS
PLANNERS / LANDSCAPE ARCHITECTS
21 FRISBY DRIVE
P.O. BOX 1797
SOUTH WINDSOR, CT 06074
860-291-8755 – T
860-291-8757 – F
www.designprofessionals.com

Copyright © 2022 Design Professionals, Inc. – All Rights Reserved

PREPARED FOR:
Scannell Properties #644, LLC
294 Grove Lane East
Suite 140
Wayzata, MN 55391
763-331-8851 T

PROJECT NO. 4670
DATE: 3/30/2022
DESIGNED BY: CHH/BPW
DRAWN BY: CHH/BPW
CHECKED BY: BPW

67 KENNEDY ROAD WAREHOUSE & DISTRIBUTION CENTER

352 SULLIVAN AVENUE, 67 & 68 KENNEDY ROAD
SOUTH WINDSOR, CONNECTICUT 06074
GIS NOs. 87300352, 49800067, & 49800068

REVISIONS

NO.	DATE		BY

OVERALL SITE PLAN

SCALE: 0 30' 60' 120'
1" = 60'

SHEET
C-OS1
SHEET 2 OF 24

File: C:\jobs\4670\Engineering\AutoCAD\4670 Site Plan.dwg Layout: 02 C-OS1 Plotted 3/30/2022 1:27 PM Last Saved 3/30/2022 1:26 PM Last Saved By: benwheeler

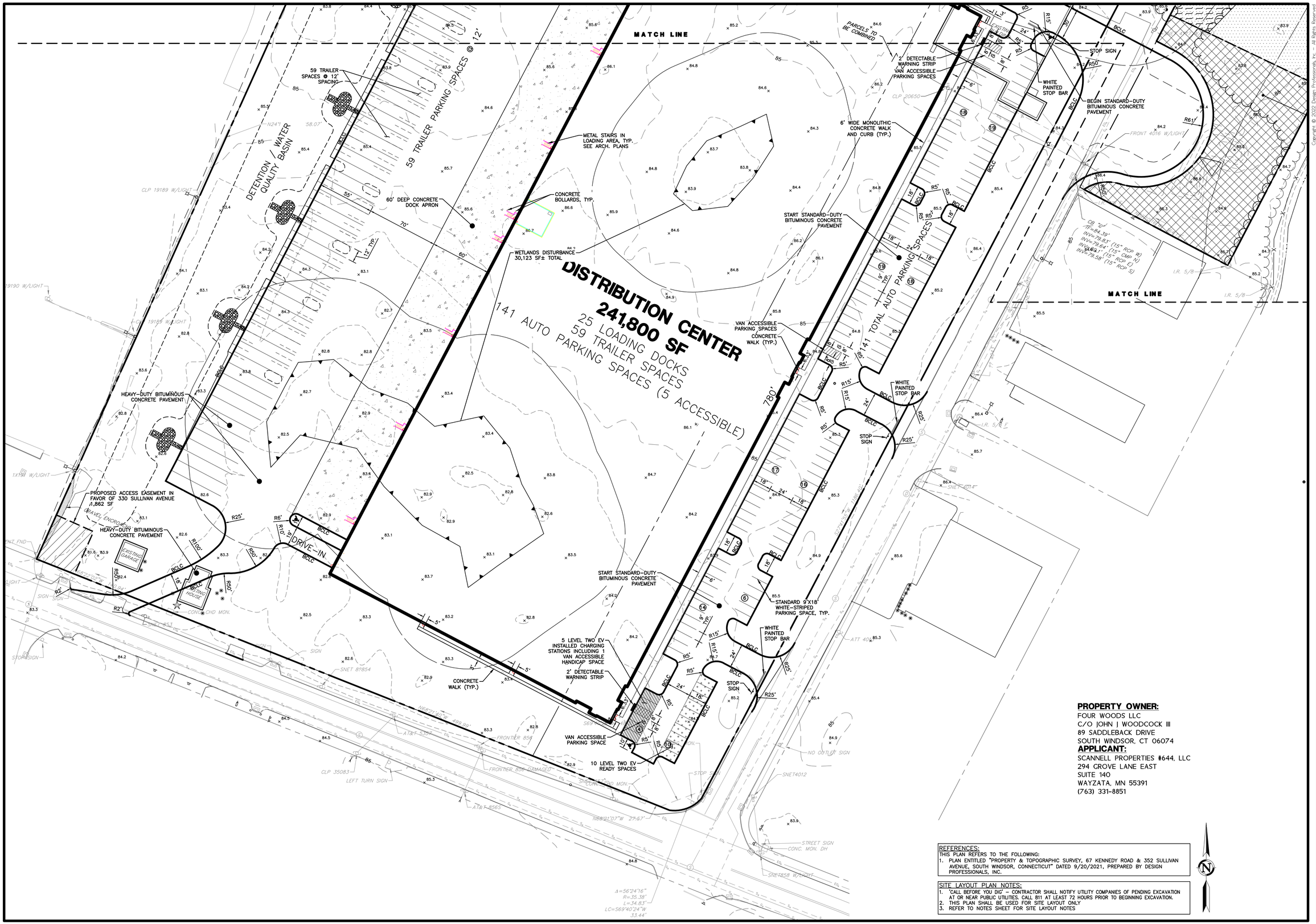

PROPERTY OWNER:
FOUR WOODS LLC
C/O JOHN J WOODCOCK III
89 SADDLEBACK DRIVE
SOUTH WINDSOR, CT 06074

APPLICANT:
SCANNELL PROPERTIES #644, LLC
294 GROVE LANE EAST
SUITE 140
WAYZATA, MN 55391
(763) 331-8851

REFERENCES:
THIS PLAN REFERS TO THE FOLLOWING:
1. PLAN ENTITLED "PROPERTY & TOPOGRAPHIC SURVEY, 67 KENNEDY ROAD & 352 SULLIVAN AVENUE, SOUTH WINDSOR, CONNECTICUT" DATED 9/20/2021, PREPARED BY DESIGN PROFESSIONALS, INC.

SITE LAYOUT PLAN NOTES:
1. "CALL BEFORE YOU DIG" – CONTRACTOR SHALL NOTIFY UTILITY COMPANIES OF PENDING EXCAVATION AT OR NEAR PUBLIC UTILITIES. CALL 811 AT LEAST 72 HOURS PRIOR TO BEGINNING EXCAVATION.
2. THIS PLAN SHALL BE USED FOR SITE LAYOUT ONLY
3. REFER TO NOTES SHEET FOR SITE LAYOUT NOTES

21 FIDELITY DRIVE
SUITE 201
SOUTH WINDSOR, CT 06074
860-291-8755 – T
860-291-8757 – F
www.designprofessionals.com
design professionals
CIVIL & TRAFFIC ENGINEERS / LAND SURVEYORS
PLANNERS / LANDSCAPE ARCHITECTS

Copyright © 2022 Design Professionals, Inc – All Rights Reserved
1. This plan is valid only if it bears the seal or stamp and original signature of the Professional Engineer, Land Surveyor or Architect in charge.
2. Reproduction techniques used in the production of this plan can shrink or stretch the paper. Scaling of this plan may not be accurate. Contact DPI if additional information is required.
3. This plan and other plans prepared by Design Professionals, Inc. are instruments of service and shall remain the property of the firm. The use of these items by DPI's client is limited to the purpose for which DPI was retained. Ownership and possession, and DPI's additional use of these items is governed by the Agreement between the parties.

PREPARED FOR:
Scannell Properties #644, LLC
294 Grove Lane East
Suite 140
Wayzata, MN 55391
763-331-8851 T

PROJECT NO.	4670
DATE	3/30/2022
DRAWN BY:	CHI/BPW
CHECKED BY:	CHI/BPW
APPROVED BY:	BPW

67 KENNEDY ROAD
WAREHOUSE & DISTRIBUTION CENTER
352 SULLIVAN AVENUE, 67 & 68 KENNEDY ROAD
SOUTH WINDSOR, CONNECTICUT 06074
GIS NOs: 87300352, 49800067, & 49800068

REVISIONS

NO.	DATE		BY

SITE PLAN

SCALE: 0 20' 40' 80'
1" = 40'

SHEET
C-SP1
SHEET 3 OF 24

File: C:\jobs\4670\Engineering\AutoCAD\4670 Site Plan.dwg Layout: 03 C-SP1 Plotted: 3/30/2022 1:28 PM Last Saved: 3/30/2022 1:26 PM Last Saved By: benwheeler

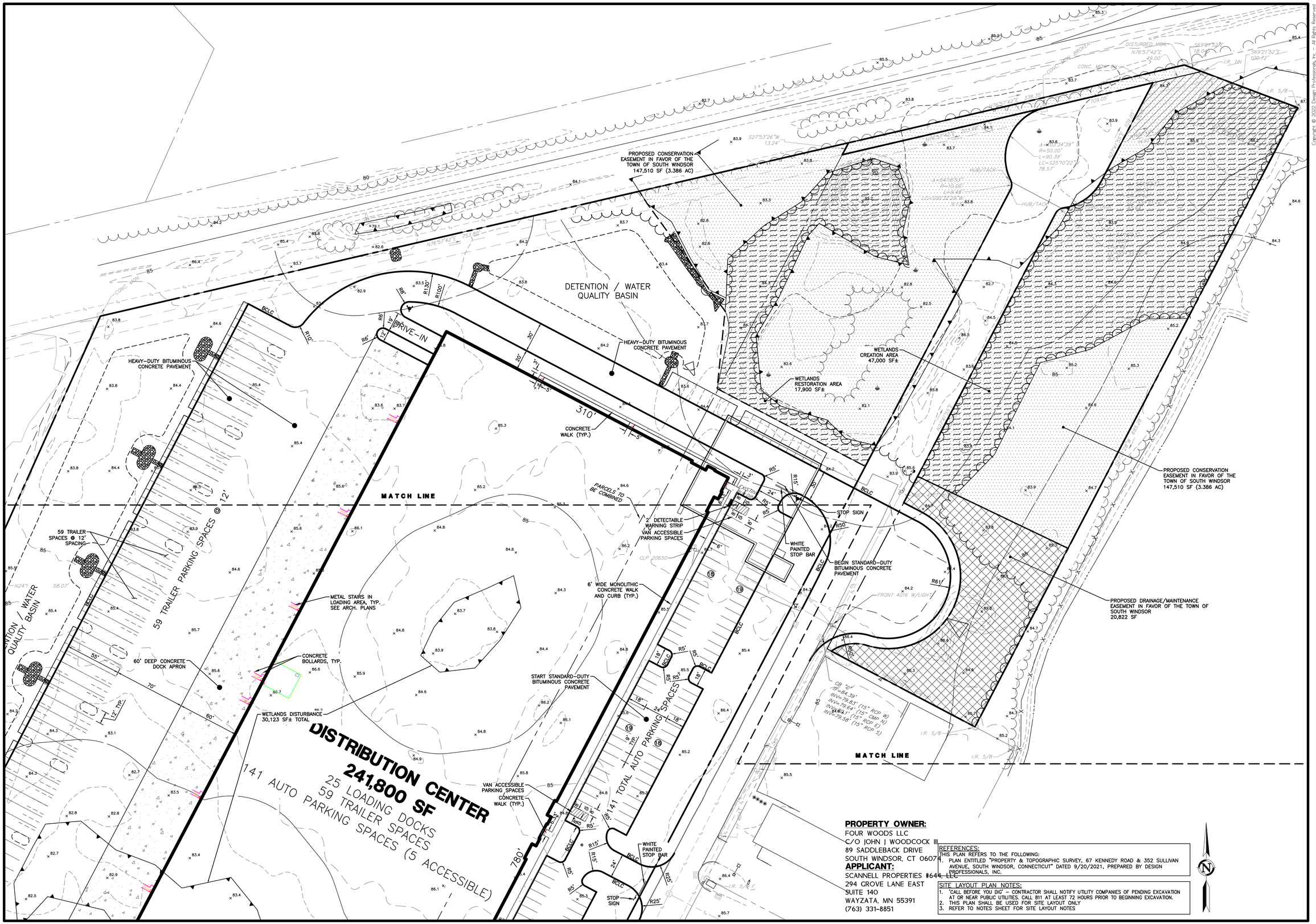

PROPERTY OWNER:
FOUR WOODS LLC
C/O JOHN J WOODCOCK III
89 SADDLEBACK DRIVE
SOUTH WINDSOR, CT 06074

APPLICANT:
SCANNELL PROPERTIES #644, LLC
294 GROVE LANE EAST
SUITE 140
WAYZATA, MN 55391
(763) 331-8851

REFERENCES:
THIS PLAN REFERS TO THE FOLLOWING:
1. PLAN ENTITLED "PROPERTY & TOPOGRAPHIC SURVEY, 67 KENNEDY ROAD & 352 SULLIVAN AVENUE, SOUTH WINDSOR, CONNECTICUT" DATED 9/20/2021, PREPARED BY DESIGN PROFESSIONALS, INC.

SITE LAYOUT PLAN NOTES:
1. "CALL BEFORE YOU DIG" – CONTRACTOR SHALL NOTIFY UTILITY COMPANIES OF PENDING EXCAVATION AT OR NEAR PUBLIC UTILITIES. CALL 811 AT LEAST 72 HOURS PRIOR TO BEGINNING EXCAVATION.
2. THIS PLAN SHALL BE USED FOR SITE LAYOUT ONLY
3. REFER TO NOTES SHEET FOR SITE LAYOUT NOTES

21 FITNEY DRIVE
P.O. BOX 1591
SOUTH WINDSOR, CT 06074
860-291-8755 – T
860-291-8757 – F
www.designprofessionals.com

design professionals
CIVIL & TRAFFIC ENGINEERS / LAND SURVEYORS
PLANNERS / LANDSCAPE ARCHITECTS

Copyright © 2022 Design Professionals, Inc – All Rights Reserved

• This plan is valid only if bears the seal or stamp and original signature of the Professional Engineer, Land Surveyor or Landscape Architect.

• Reproduction techniques used in the production of this plan can shrink or stretch the paper. Scaling of this plan may not be accurate. Contact DPI if additional information is required.

• This plan and other plans prepared by Design Professionals, Inc. are the property of Design Professionals and remain its property. The use of these plans by DPI's client and others is subject to the terms and conditions of DPI's contract with DPI. Additional use of these plans is prohibited without the express written consent of DPI.

PREPARED FOR:
Scannell Properties #644, LLC
294 Grove Lane East
Suite 140
Wayzata, MN 55391
763-331-8851 T

PROJECT NO.	4670
DATE	3/30/2022
DRAWN BY:	CHI/BPW
CHECKED BY:	BPW

67 KENNEDY ROAD WAREHOUSE & DISTRIBUTION CENTER

352 SULLIVAN AVENUE, 67 & 68 KENNEDY ROAD
SOUTH WINDSOR, CONNECTICUT 06074
GIS NOs: 87300352, 49800067, & 49800068

REVISIONS

NO.	DATE		BY

SITE PLAN

SCALE: 1" = 40'
0 20' 40' 80'

SHEET
C-SP1
SHEET 4 OF 24

File: C:\jobs\4670\Engineering\AutoCAD\4670 Site Pending Layout: 04 C-SP2 Plotted 3/30/2022 1:29 PM Last Saved 3/30/2022 1:26 PM Last Saved By: benwheeler

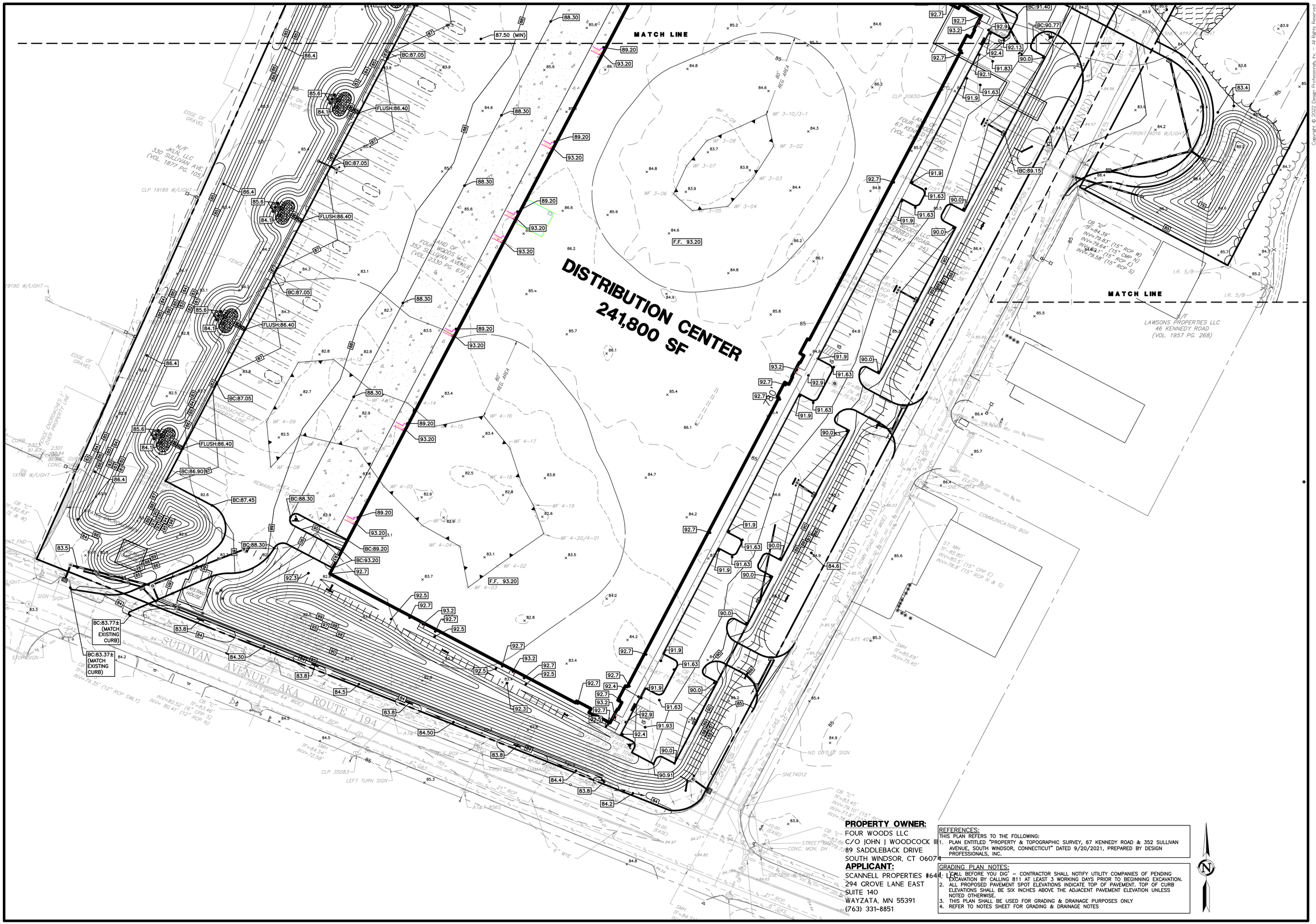

PROPERTY OWNER:
FOUR WOODS LLC
C/O JOHN J WOODCOCK III
89 SADDLEBACK DRIVE
SOUTH WINDSOR, CT 06074

APPLICANT:
SCANNELL PROPERTIES #644, LLC
294 GROVE LANE EAST
SUITE 140
WAYZATA, MN 55391
(763) 331-8851

REFERENCES:
THIS PLAN REFERS TO THE FOLLOWING:
1. PLAN ENTITLED "PROPERTY & TOPOGRAPHIC SURVEY, 67 KENNEDY ROAD & 352 SULLIVAN AVENUE, SOUTH WINDSOR, CONNECTICUT" DATED 9/20/2021, PREPARED BY DESIGN PROFESSIONALS, INC.

GRADING PLAN NOTES:
1. 'CALL BEFORE YOU DIG' – CONTRACTOR SHALL NOTIFY UTILITY COMPANIES OF PENDING EXCAVATION BY CALLING 811 AT LEAST 3 WORKING DAYS PRIOR TO BEGINNING EXCAVATION.
2. ALL PROPOSED PAVEMENT SPOT ELEVATIONS INDICATE TOP OF PAVEMENT. TOP OF CURB ELEVATIONS SHALL BE SIX INCHES ABOVE THE ADJACENT PAVEMENT ELEVATION UNLESS NOTED OTHERWISE.
3. THIS PLAN SHALL BE USED FOR GRADING & DRAINAGE PURPOSES ONLY
4. REFER TO NOTES SHEET FOR GRADING & DRAINAGE NOTES

21 FERGUSON DRIVE
P.O. BOX 1591
SOUTH WINDSOR, CT 06074
860-291-8755 – T
860-291-8757 – F
www.designprofessionals.com
design professionals
CIVIL & TRAFFIC ENGINEERS / LAND SURVEYORS
PLANNERS / LANDSCAPE ARCHITECTS

Copyright © 2022 Design Professionals, Inc. – All Rights Reserved
1. This plan is valid only if bears the seal or stamp and original signature of the Professional Engineer, Land Surveyor or Landscape Architect.
2. Reproduction techniques used in the production of this plan can stretch or shrink the paper. Scaling of this plan is not recommended. Contact DPI if additional information is required.
3. This plan and other plans prepared by Design Professionals, Inc. are instruments of service and shall remain its property. The use of these plans by DPI's client and others is limited to the purpose for which DPI was retained. Plans, and DPI's instruments of service, are not to be loaned, copied or otherwise disposed of without DPI's written consent.

PREPARED FOR:
Scannell Properties #644, LLC
294 Grove Lane East
Suite 140
Wayzata, MN 55391
763-331-8851 T

PROJECT NO. 4670
DATE 3/30/2022
DRAWN BY: CHJ/BPW
DESIGNED BY: CHJ/BPW
REVIEWED BY: BPW

67 KENNEDY ROAD
WAREHOUSE &
DISTRIBUTION CENTER
352 SULLIVAN AVENUE, 67 & 68 KENNEDY ROAD
SOUTH WINDSOR, CONNECTICUT 06074
GIS NOs: 87300352, 49800067, & 49800068

REVISIONS

NO.	DATE	BY

GRADING PLAN

SCALE: 1" = 40'
0 20' 40' 80'

SHEET
C-GD1
SHEET 5 OF 24

File: C:\jobs\4670\Engineering\AutoCAD\4670 Site Pending Layout: 05 C-GD1 Plotted: 3/30/2022 1:34 PM Last Saved: 3/30/2022 1:34 PM Last Saved By: benwheeler

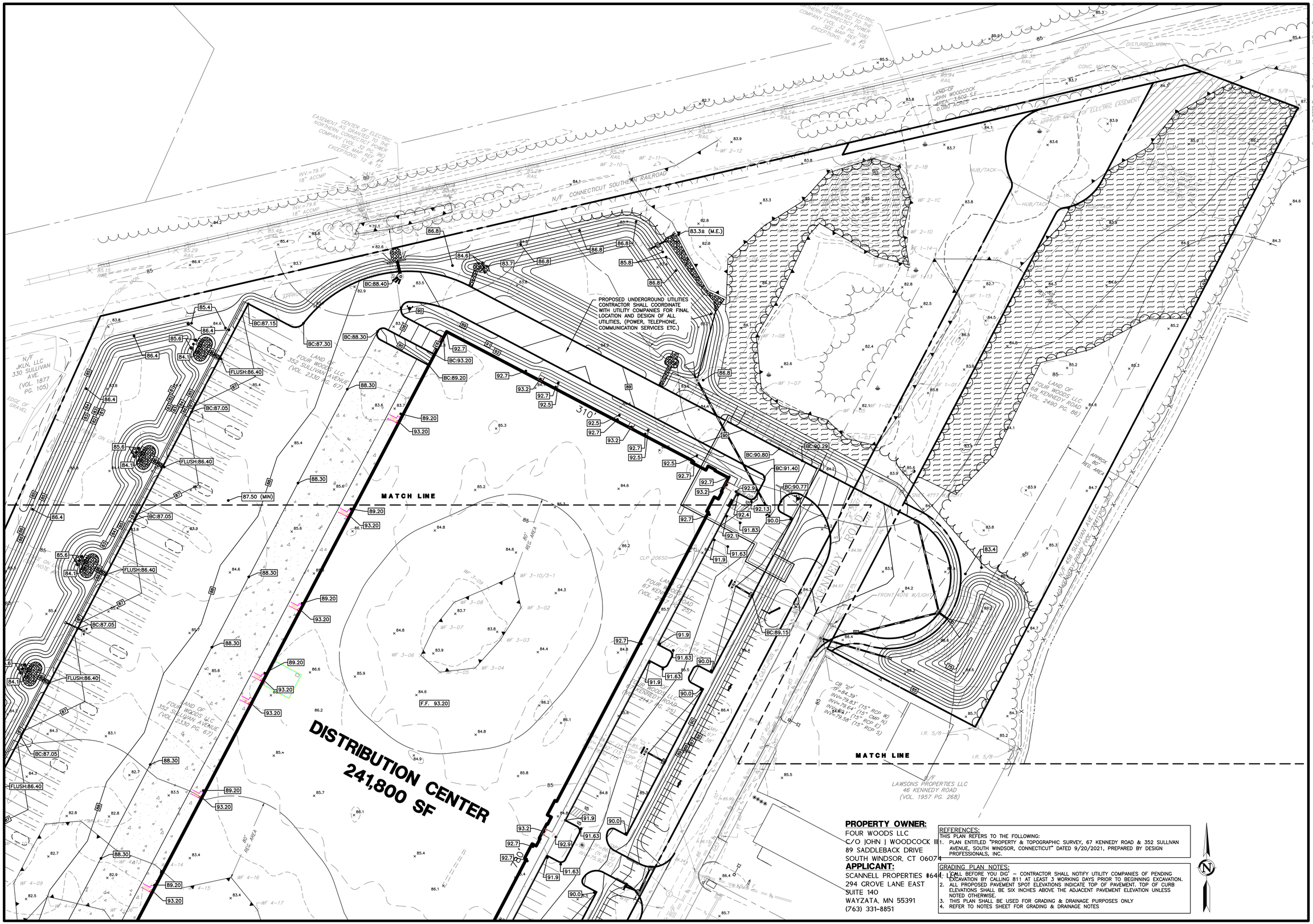

PROPERTY OWNER:
FOUR WOODS LLC
C/O JOHN J WOODCOCK III
89 SADDLEBACK DRIVE
SOUTH WINDSOR, CT 06074

APPLICANT:
SCANNELL PROPERTIES #644, LLC
294 GROVE LANE EAST
SUITE 140
WAYZATA, MN 55391
(763) 331-8851

REFERENCES:
THIS PLAN REFERS TO THE FOLLOWING:
1. PLAN ENTITLED "PROPERTY & TOPOGRAPHIC SURVEY, 67 KENNEDY ROAD & 352 SULLIVAN AVENUE, SOUTH WINDSOR, CONNECTICUT" DATED 9/20/2021, PREPARED BY DESIGN PROFESSIONALS, INC.

GRADING PLAN NOTES:
1. 'CALL BEFORE YOU DIG' – CONTRACTOR SHALL NOTIFY UTILITY COMPANIES OF PENDING EXCAVATION BY CALLING 811 AT LEAST 3 WORKING DAYS PRIOR TO BEGINNING EXCAVATION.
2. ALL PROPOSED PAVEMENT SPOT ELEVATIONS INDICATE TOP OF PAVEMENT. TOP OF CURB ELEVATIONS SHALL BE SIX INCHES ABOVE THE ADJACENT PAVEMENT ELEVATION UNLESS NOTED OTHERWISE.
3. THIS PLAN SHALL BE USED FOR GRADING & DRAINAGE PURPOSES ONLY
4. REFER TO NOTES SHEET FOR GRADING & DRAINAGE NOTES

Copyright © 2022 Design Professionals, Inc – All Rights Reserved

21 FRESH DRIVE
P.O. BOX 1591
SOUTH WINDSOR, CT 06074
860-291-8755 – T
860-291-8757 – F
www.designprofessionals.com

design professionals
CIVIL & TRAFFIC ENGINEERS / LAND SURVEYORS
PLANNERS / LANDSCAPE ARCHITECTS

* This plan is valid only if bears the seal or stamp and original signature of the Professional Engineer, Land Surveyor, Architect or Landscape Architect.

* Reproduction techniques used in the production of this plan can shrink or stretch the paper. Scaling of the drawing may not be accurate. Contact DP, if additional information is required.

* This plan and other plans prepared by Design Professionals, Inc. are instruments of service and shall remain its property. The use of these plans by DPI, the owner or others for purposes other than those for which prepared, and DPI's additional part of DPI's professional services, is prohibited without DPI's consent.

PREPARED FOR:
Scannell Properties #644, LLC
294 Grove Lane East
Suite 140
Wayzata, MN 55391
763-331-8851 T

PROJECT NO.	4670
DATE	3/30/2022
DRAWN BY:	CHJ/BPW
CHECKED BY:	CHJ/BPW

67 KENNEDY ROAD WAREHOUSE & DISTRIBUTION CENTER

352 SULLIVAN AVENUE, 67 & 68 KENNEDY ROAD
SOUTH WINDSOR, CONNECTICUT 06074
GIS NOs: 87300352, 49800067, & 49800068

REVISIONS

NO.	DATE		BY

GRADING PLAN

SCALE: 1" = 40'
0 20' 40' 80'

SHEET
C-GD2
SHEET 6 OF 24

File: C:\jobs\4670\Engineering\AutoCAD\4670 Site Pending Layout: 06 C-GD2 Plotted: 3/30/2022 1:35 PM Last Saved: 3/30/2022 1:34 PM Last Saved By: berwheeler

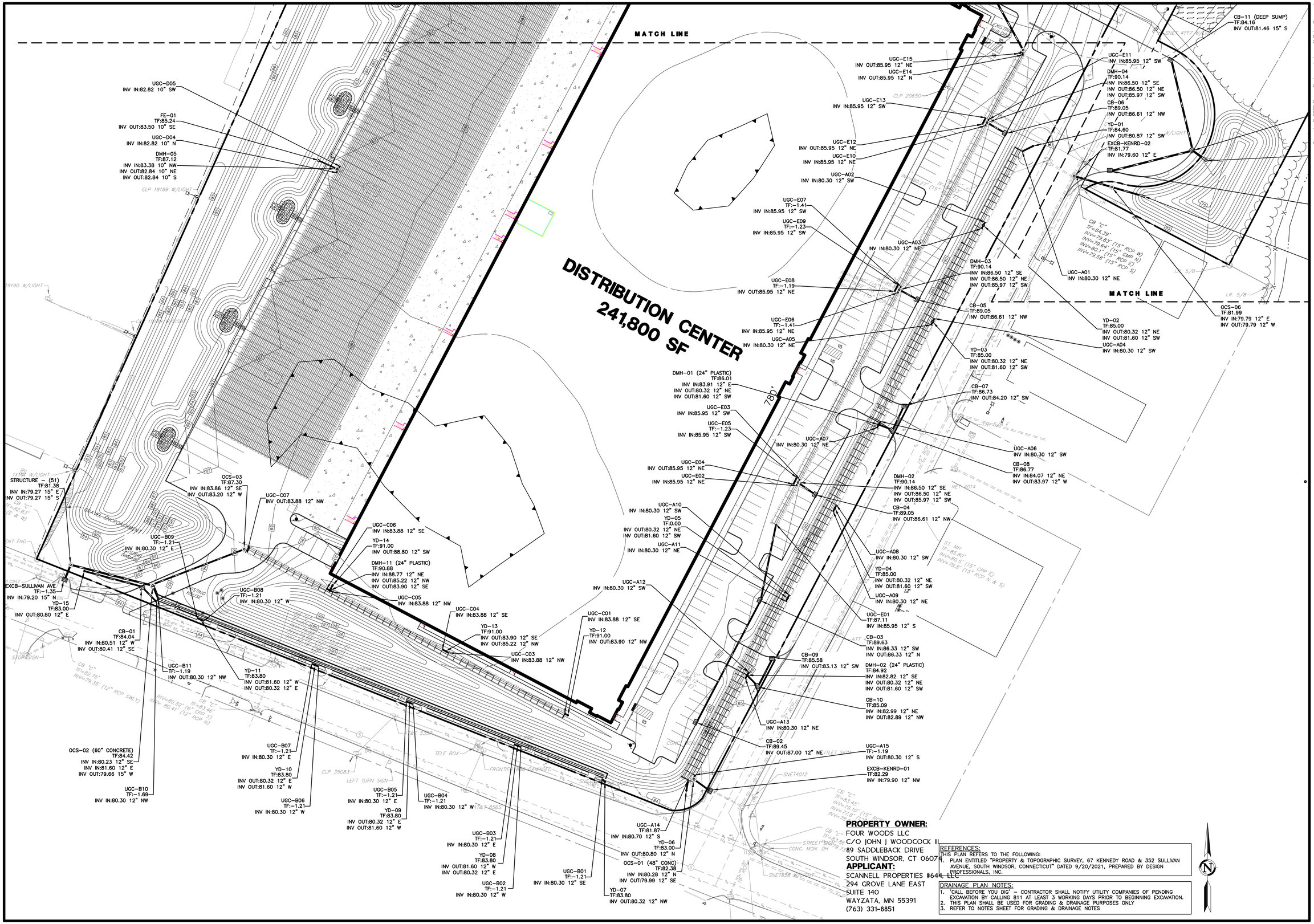

PROPERTY OWNER:
FOUR WOODS LLC
C/O JOHN J WOODCOCK III
89 SADDLEBACK DRIVE
SOUTH WINDSOR, CT 06074

APPLICANT:
SCANNELL PROPERTIES #644, LLC
294 GROVE LANE EAST
SUITE 140
WAYZATA, MN 55391
(763) 331-8851

REFERENCES:
THIS PLAN REFERS TO THE FOLLOWING:
1. PLAN ENTITLED "PROPERTY & TOPOGRAPHIC SURVEY, 67 KENNEDY ROAD & 352 SULLIVAN AVENUE, SOUTH WINDSOR, CONNECTICUT" DATED 9/20/2021, PREPARED BY DESIGN PROFESSIONALS, INC.

DRAINAGE PLAN NOTES:
1. "CALL BEFORE YOU DIG" – CONTRACTOR SHALL NOTIFY UTILITY COMPANIES OF PENDING EXCAVATION BY CALLING 811 AT LEAST 3 WORKING DAYS PRIOR TO BEGINNING EXCAVATION.
2. THIS PLAN SHALL BE USED FOR GRADING & DRAINAGE PURPOSES ONLY
3. REFER TO NOTES SHEET FOR GRADING & DRAINAGE NOTES

21 FERNEY DRIVE
P.O. BOX 1797
SOUTH WINDSOR, CT 06074
860-291-8755 – T
860-291-8757 – F
design@dpinspire.com
www.dpinspire.com

design professionals
CIVIL & TRAFFIC ENGINEERS / LAND SURVEYORS
PLANNERS / LANDSCAPE ARCHITECTS

Copyright © 2022 Design Professionals, Inc. – All Rights Reserved

1. This plan is valid only if it bears the seal or stamp and signature of the Professional Engineer, Land Surveyor or Landscape Architect.
2. Reproduction techniques used in the production of this plan can smudge or shrink the paper. Scaling of the plan is not recommended. Contact DPI if additional information is required.
3. This plan and other plans prepared by Design Professionals, Inc. are instruments of service and shall remain its property. The use of these plans by DPI's client and others is limited to the purpose for which DPI was retained. DPI's Additional use of DPI's plans, in whole or in part, without DPI's written consent is prohibited.

PREPARED FOR:
Scannell Properties #644, LLC
294 Grove Lane East
Suite 140
Wayzata, MN 55391
763-331-8851 T

PROJECT NO.	4670
DATE	3/30/2022
DRAWN BY:	CHI/BPW
DESIGN BY:	CHI/BPW
CHECKED BY:	BPW

67 KENNEDY ROAD
WAREHOUSE &
DISTRIBUTION CENTER
352 SULLIVAN AVENUE, 67 & 68 KENNEDY ROAD
SOUTH WINDSOR, CONNECTICUT 06074
GIS NOs: 87300352, 49800067, & 49800068

NO.	DATE	REVISIONS	BY

DRAINAGE PLAN

SCALE: 0 20' 40' 80'
1" = 40'

SHEET
C-DR1
SHEET 7 OF 24

File: C:\jobs\4670\Engineering\AutoCAD\4670 Site Pending Layout: 07 C-DR1 Plotted: 3/30/2022, 1:36 PM Last Saved: 3/30/2022, 1:36 PM Last Saved By: benwheeler

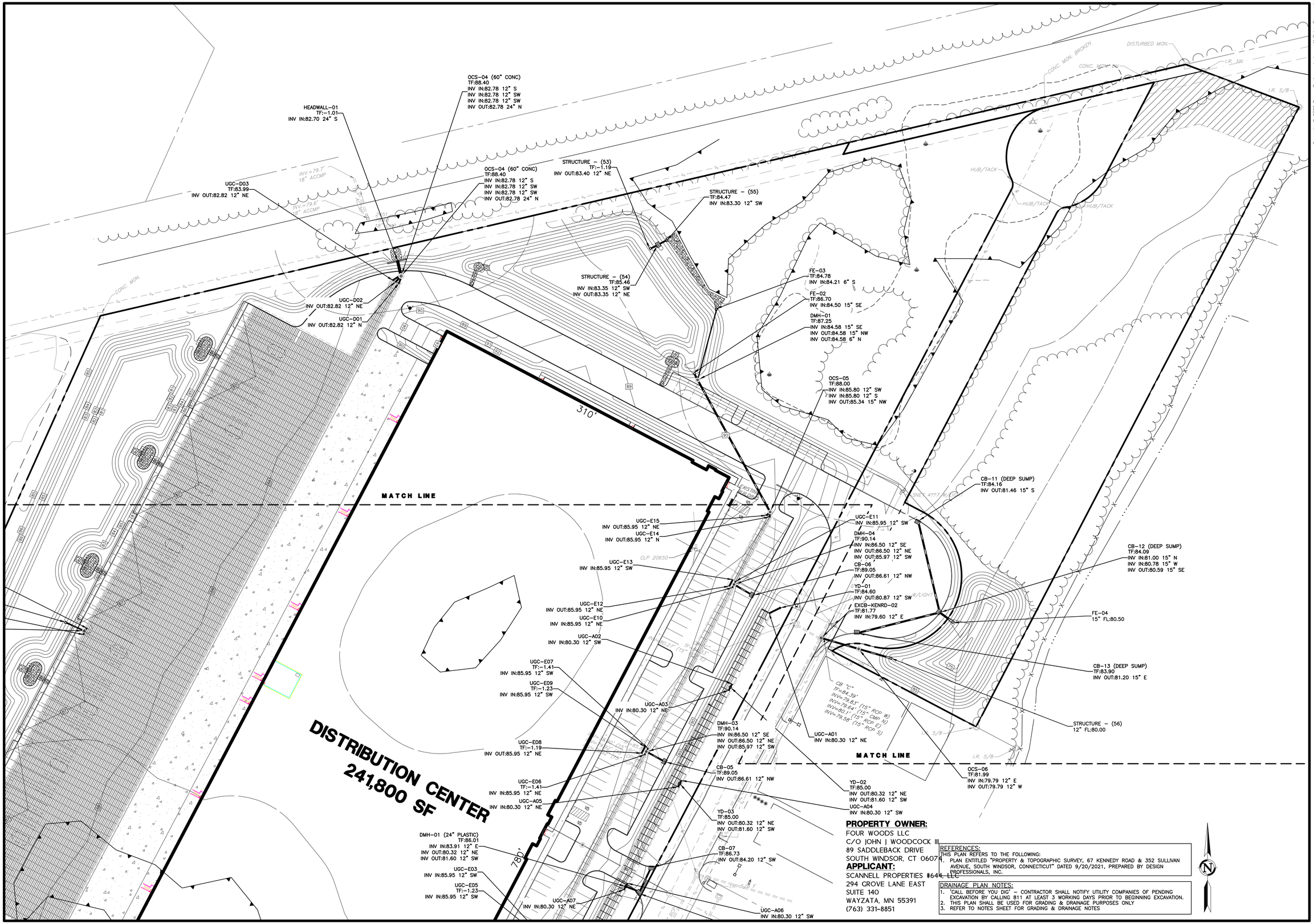

21 FITNEY DRIVE
P.O. BOX 1797
SOUTH WINDSOR, CT 06074
860-291-8755 – T
860-291-8757 – F
www.designprofessionals.com

design professionals
CIVIL & TRAFFIC ENGINEERS / LAND SURVEYORS
PLANNERS / LANDSCAPE ARCHITECTS

Copyright © 2022 Design Professionals, Inc. – All Rights Reserved

• The plans, maps and other plans prepared by Design Professionals, Inc. are instruments of service and shall remain the property of the firm. The use of these items by OWN, contractors, subcontractors, lenders, and other parties to the project, and LER Additional part of OWN, is permitted for the implementation of the project.

• Reproduction techniques used in the production of the plans (on screen or on vellum, the paper being of the highest quality available) may produce minor distortion. Contact DPI if additional information is required.

PREPARED FOR:
Scannell Properties #644, LLC
294 Grove Lane East
Suite 140
Wayzata, MN 55391
763-331-8851 T

PROJECT NO.	DATE	DRAWN BY:	DESIGNED BY:
4670	3/30/2022	CMJ/BPW	BPW

67 KENNEDY ROAD
WAREHOUSE & DISTRIBUTION CENTER
352 SULLIVAN AVENUE, 67 & 68 KENNEDY ROAD
SOUTH WINDSOR, CONNECTICUT 06074
GIS NOs: 87300352, 49800067, & 49800068

REVISIONS

NO.	DATE		BY

DRAINAGE PLAN

SCALE: 1" = 40'
0 20' 40' 80'

SHEET
C-DR2
SHEET 8 OF 24

File: C:\jobs\4670\Engineering\AutoCAD\4670 Site Plan.dwg Layout: 08 C-DR2 Plotted: 3/30/2022 1:38 PM Last Saved 3/30/2022 1:36 PM Last Saved By: bwwheeler

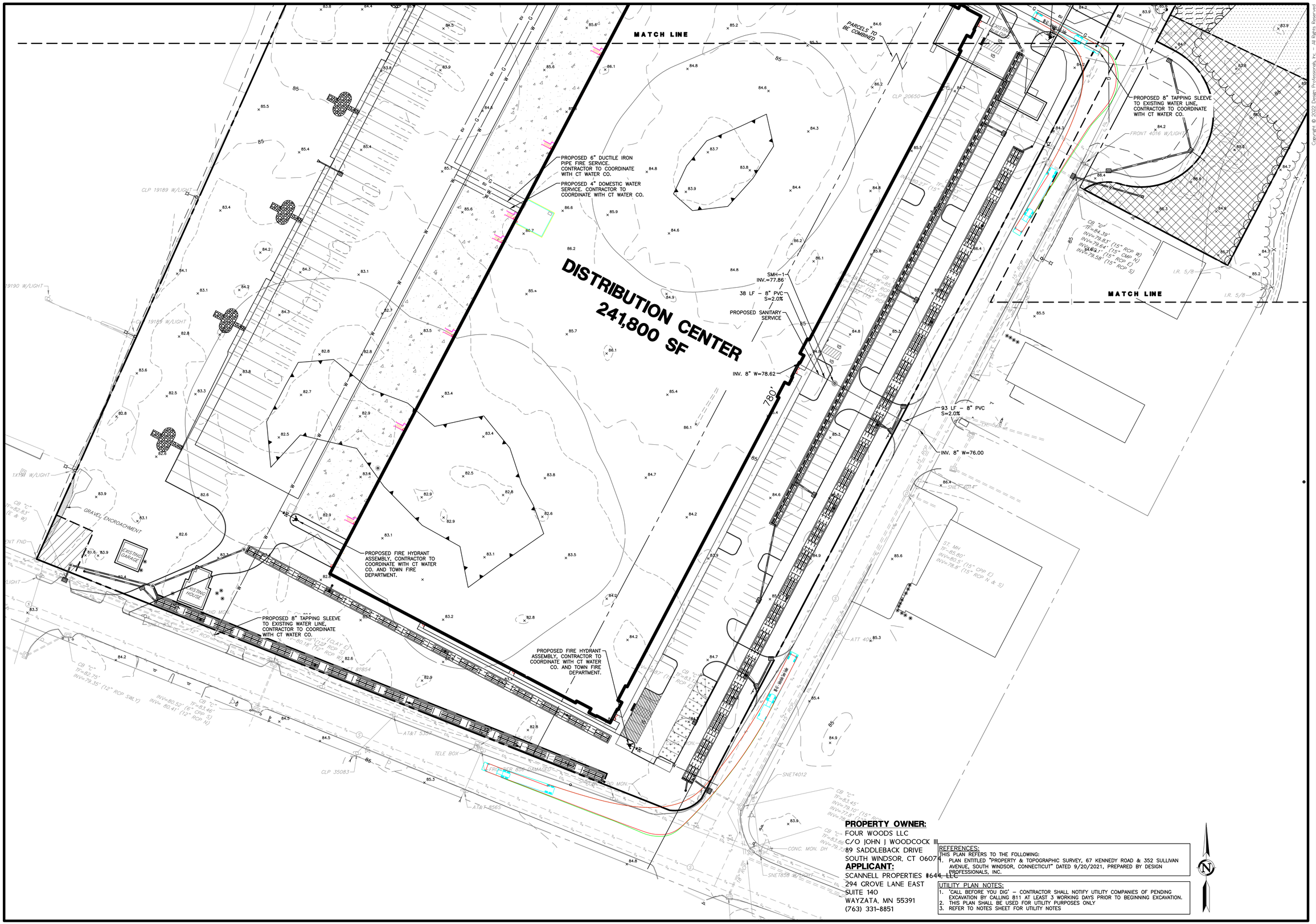

PROPERTY OWNER:
FOUR WOODS LLC
C/O JOHN J WOODCOCK III
89 SADDLEBACK DRIVE
SOUTH WINDSOR, CT 06074

APPLICANT:
SCANNELL PROPERTIES #644, LLC
294 GROVE LANE EAST
SUITE 140
WAYZATA, MN 55391
(763) 331-8851

REFERENCES:
THIS PLAN REFERS TO THE FOLLOWING:
1. PLAN ENTITLED "PROPERTY & TOPOGRAPHIC SURVEY, 67 KENNEDY ROAD & 352 SULLIVAN AVENUE, SOUTH WINDSOR, CONNECTICUT" DATED 9/20/2021, PREPARED BY DESIGN PROFESSIONALS, INC.

UTILITY PLAN NOTES:
1. 'CALL BEFORE YOU DIG' – CONTRACTOR SHALL NOTIFY UTILITY COMPANIES OF PENDING EXCAVATION BY CALLING 811 AT LEAST 3 WORKING DAYS PRIOR TO BEGINNING EXCAVATION.
2. THIS PLAN SHALL BE USED FOR UTILITY PURPOSES ONLY
3. REFER TO NOTES SHEET FOR UTILITY NOTES

21 FITNEY DRIVE
P.O. BOX 317
SOUTH WINDSOR, CT 06074
860-291-8755 – T
860-528-7835 – F
www.designprofessionals.com
design professionals
CIVIL & TRAFFIC ENGINEERS / LAND SURVEYORS
PLANNERS / LANDSCAPE ARCHITECTS

Copyright © 2022 Design Professionals, Inc. – All Rights Reserved

1. This plan is valid only if bears the seal or stamp and original signature of the Professional Engineer, Land Surveyor or Landscape Architect.
2. Reproduction techniques used in the production of this plan can stretch or shrink the paper. Using a 22" by 34" plan as a guide, verify scales before using information is required.
3. This plan and other plans prepared by Design Professionals, Inc. are instruments of service and shall remain its property. The use of these items by DPI, the owner or others for purposes other than those for which prepared, are a violation of DPI's copyright and property rights, and DPI's intellectual and all other rights are reserved and protected.

PREPARED FOR:
Scannell Properties #644, LLC
294 Grove Lane East
Suite 140
Wayzata, MN 55391
763-331-8851 T

PROJECT NO. 4670
DATE: 3/30/2022
DRAWN BY: CHI/BPW
CHECKED BY: CHI/BPW
REVIEWED BY: BPW

67 KENNEDY ROAD
WAREHOUSE &
DISTRIBUTION CENTER
352 SULLIVAN AVENUE, 67 & 68 KENNEDY ROAD
SOUTH WINDSOR, CONNECTICUT 06074
GIS NOs: 87300352, 49800067, & 49800068

REVISIONS

NO.	DATE		BY

UTILITY PLAN

SCALE: 0 20' 40' 80'
1" = 40'

SHEET
C-UT1
SHEET 5 OF 24

File: C:\jobs\4670\Engineering\AutoCAD\4670 Site Pending Layout: 09 C-UT1 Plotted: 3/30/2022 9:41 AM Last Saved: 3/30/2022 9:27 AM Last Saved By: bertwheeler

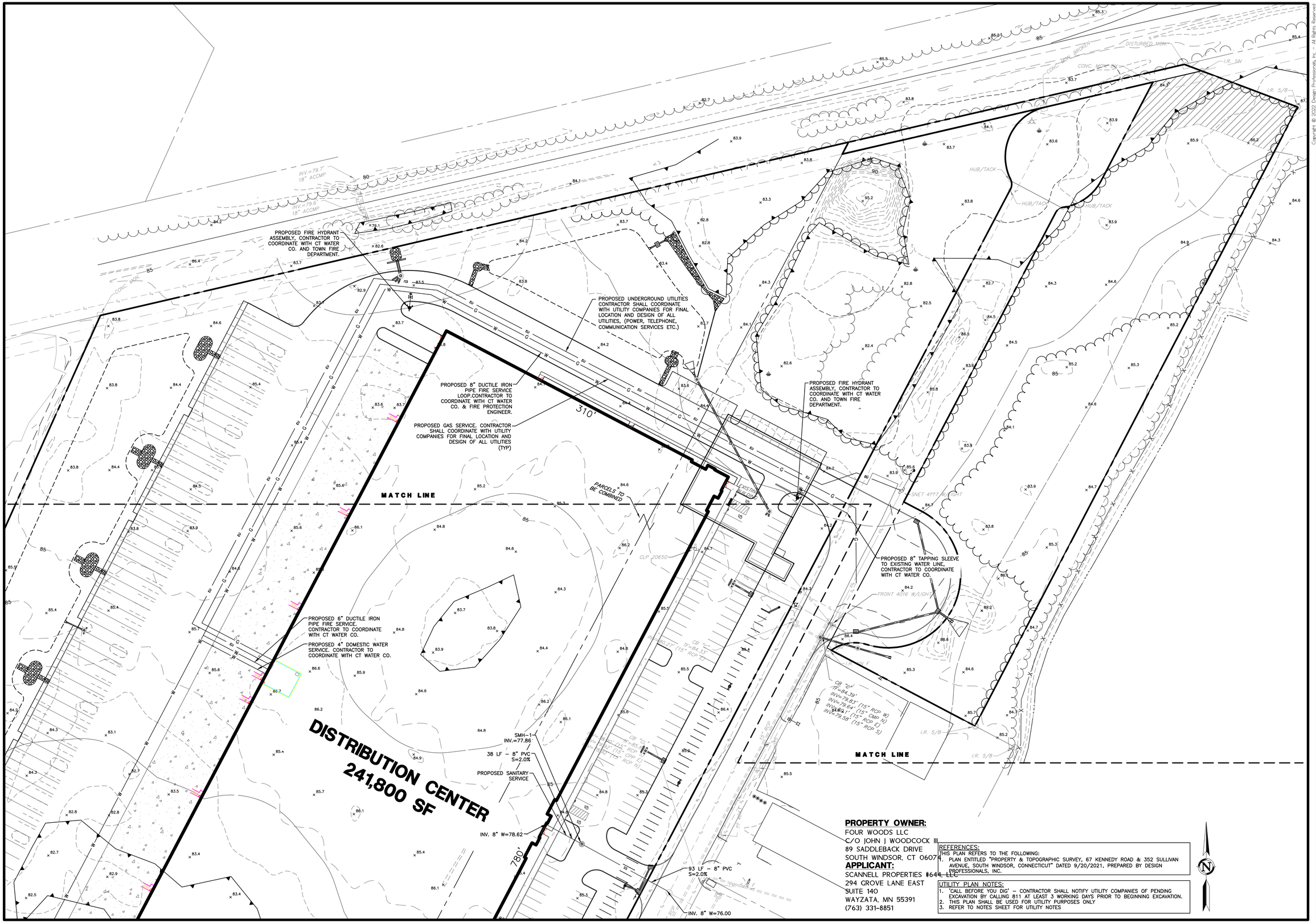

PROPERTY OWNER:
FOUR WOODS LLC
C/O JOHN J WOODCOCK III
89 SADDLEBACK DRIVE
SOUTH WINDSOR, CT 06074

APPLICANT:
SCANNELL PROPERTIES #644, LLC
294 GROVE LANE EAST
SUITE 140
WAYZATA, MN 55391
(763) 331-8851

REFERENCES:
THIS PLAN REFERS TO THE FOLLOWING:
1. PLAN ENTITLED "PROPERTY & TOPOGRAPHIC SURVEY, 67 KENNEDY ROAD & 352 SULLIVAN AVENUE, SOUTH WINDSOR, CONNECTICUT" DATED 9/20/2021, PREPARED BY DESIGN PROFESSIONALS, INC.

UTILITY PLAN NOTES:
1. 'CALL BEFORE YOU DIG' – CONTRACTOR SHALL NOTIFY UTILITY COMPANIES OF PENDING EXCAVATION BY CALLING 811 AT LEAST 3 WORKING DAYS PRIOR TO BEGINNING EXCAVATION.
2. THIS PLAN SHALL BE USED FOR UTILITY PURPOSES ONLY
3. REFER TO NOTES SHEET FOR UTILITY NOTES

21 FIDELITY DRIVE
SUITE 100
SOUTH WINDSOR, CT 06074
860-291-8755 – T
860-291-8757 – F
www.designprofessionals.com

design professionals
CIVIL & TRAFFIC ENGINEERS / LAND SURVEYORS
PLANNERS / LANDSCAPE ARCHITECTS

Copyright © 2022 Design Professionals, Inc. – All Rights Reserved

* The plan is valid only if bears the seal or stamp and original signature of the Professional Engineer, Land Surveyor or Landscape Architect.
* Reproduction techniques used in the production of this plan can smudge or shrink. The paper Scale of this plan may not correspond to the plan you have. Contact DPI if additional information is required.
* This plan and other plans prepared by Design Professionals, Inc. are instruments of service and shall remain the property of Design Professionals, Inc. The use of these plans by OWN, contractor, other consultants, or any other person or possessor, and DPI's additional use of these items is governed by a separate agreement or DPI's standard terms & conditions.

PREPARED FOR:
Scannell Properties #644, LLC
294 Grove Lane East
Suite 140
Wayzata, MN 55391
763-331-8851 T

PROJECT NO. 4670
DATE: 3/30/2022
DRAWN BY: CHJ/BPW
CHECKED BY: CHJ/BPW
DESIGNED BY: BPW

67 KENNEDY ROAD
WAREHOUSE &
DISTRIBUTION CENTER
352 SULLIVAN AVENUE, 67 & 68 KENNEDY ROAD
SOUTH WINDSOR, CONNECTICUT 06074
GIS NOs. 87300352, 49800067, & 49800068

REVISIONS

NO.	DATE		BY

UTILITY PLAN

SCALE: 0 20' 40' 80'
1" = 40'

SHEET
C-UT2
SHEET 10 OF 24

File: C:\jobs\4670\Engineering\AutoCAD\4670 Site Plan.dwg Layout: 10 C-UT2 Plotted: 3/30/2022 1:41 PM Last Saved 3/30/2022 1:36 PM Last Saved By: benwheeler

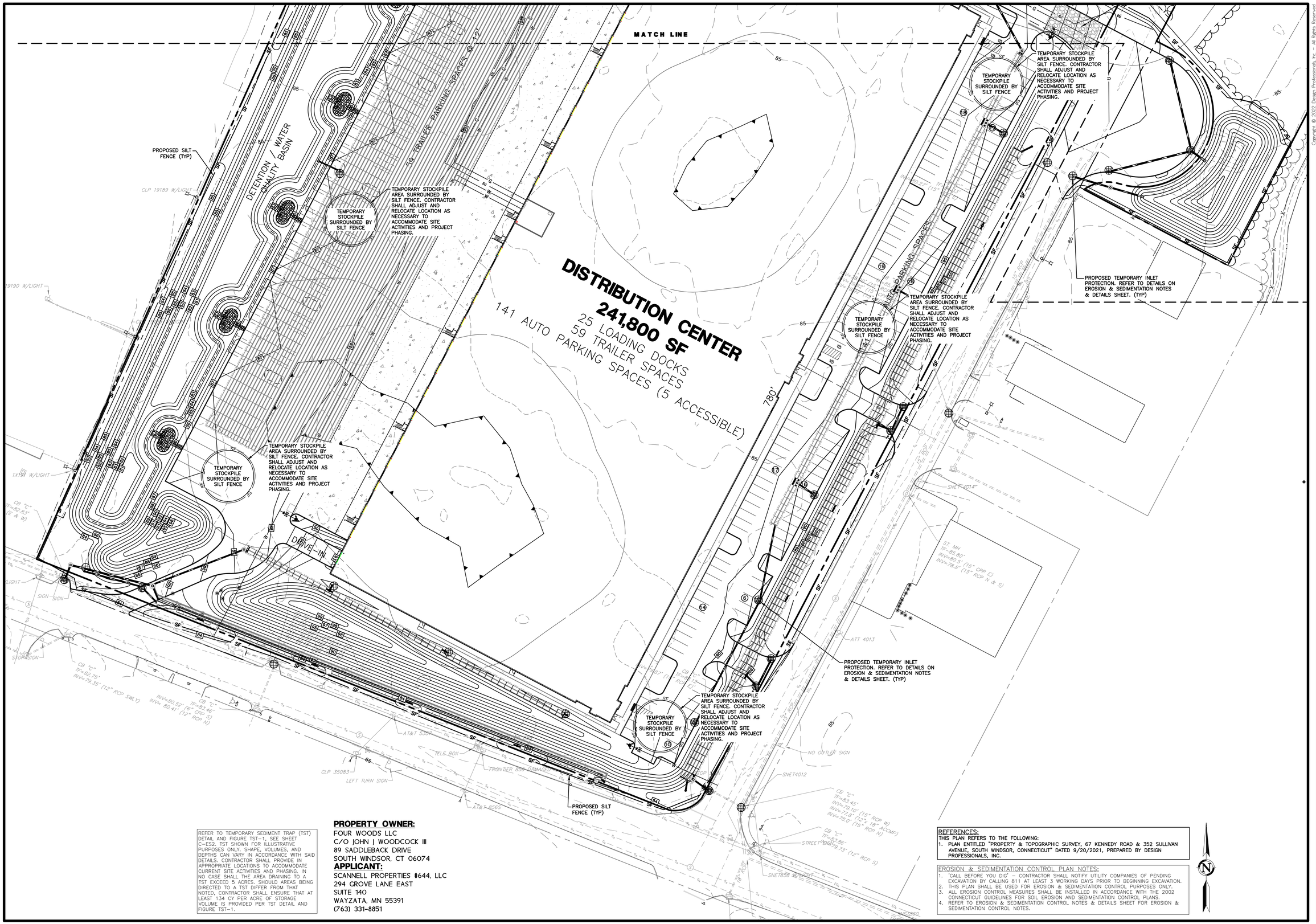

REFER TO TEMPORARY SEDIMENT TRAP (TST) DETAIL AND FIGURE TST-1, SEE SHEET C-ES2. TST SHOWN FOR ILLUSTRATIVE PURPOSES ONLY. SHAPE, VOLUMES, AND DEPTHS CAN VARY IN ACCORDANCE WITH SAID DETAILS. CONTRACTOR SHALL PROVIDE IN APPROPRIATE LOCATIONS TO ACCOMMODATE CURRENT SITE ACTIVITIES AND PHASING. IN NO CASE SHALL THE AREA DRAINING TO A TST EXCEED 5 ACRES. SHOULD AREAS BEING DIRECTED TO A TST DIFFER FROM THAT NOTED, CONTRACTOR SHALL ENSURE THAT AT LEAST 134 CY PER ACRE OF STORAGE VOLUME IS PROVIDED PER TST DETAIL AND FIGURE TST-1.

PROPERTY OWNER:
FOUR WOODS LLC
C/O JOHN J WOODCOCK III
89 SADDLEBACK DRIVE
SOUTH WINDSOR, CT 06074
APPLICANT:
SCANNELL PROPERTIES #644, LLC
294 GROVE LANE EAST
SUITE 140
WAYZATA, MN 55391
(763) 331-8851

REFERENCES:
THIS PLAN REFERS TO THE FOLLOWING:
1. PLAN ENTITLED "PROPERTY & TOPOGRAPHIC SURVEY, 67 KENNEDY ROAD & 352 SULLIVAN AVENUE, SOUTH WINDSOR, CONNECTICUT" DATED 9/20/2021, PREPARED BY DESIGN PROFESSIONALS, INC.

EROSION & SEDIMENTATION CONTROL PLAN NOTES:
1. 'CALL BEFORE YOU DIG' – CONTRACTOR SHALL NOTIFY UTILITY COMPANIES OF PENDING EXCAVATION BY CALLING 811 AT LEAST 3 WORKING DAYS PRIOR TO BEGINNING EXCAVATION.
2. THIS PLAN SHALL BE USED FOR EROSION & SEDIMENTATION CONTROL PURPOSES ONLY.
3. ALL EROSION CONTROL MEASURES SHALL BE INSTALLED IN ACCORDANCE WITH THE 2002 CONNECTICUT GUIDELINES FOR SOIL EROSION AND SEDIMENTATION CONTROL PLANS.
4. REFER TO EROSION & SEDIMENTATION CONTROL NOTES & DETAILS SHEET FOR EROSION & SEDIMENTATION CONTROL NOTES.

21 FITNEY DRIVE
P.O. BOX 1307
SOUTH WINDSOR, CT 06074
860-291-8755 – T
860-291-8757 – F
www.designprofessionals.com
design professionals
CIVIL & TRAFFIC ENGINEERS / LAND SURVEYORS
PLANNERS / LANDSCAPE ARCHITECTS

Copyright © 2022 Design Professionals, Inc. – All Rights Reserved
1. This plan is instrument of service, is the sole property of the Design Professionals, Inc. and shall not be reused without the express written consent of the Professional Engineer. Land surveyors are not responsible for any electronic manipulations of this plan after it is originally released.
2. Reproduction techniques used in the production of this plan (ink on mylar, ink on vellum, ink on paper, blueline, blueline on sepia, etc.) can distort the original scale of the drawing. Contractors, CEM's, & Reference Foundation is required.
3. This plan and other plans prepared by Design Professionals, Inc. are the property of Design Professionals and shall remain its property. The use of these plans by GPCR, Inc. and/or any other entity other than Design Professionals, Inc. is prohibited and constitutes a misappropriation of trade secrets belonging to Design Professionals, Inc. Any alteration of GPCR, Inc. plans, forms, or provisions, and/or GPCR, Inc. additional use of GPCR, Inc. plans, forms, or provisions constitutes fraud.

PREPARED FOR:
Scannell Properties #644, LLC
294 Grove Lane East
Suite 140
Wayzata, MN 55391
763-331-8851 T

PROJECT NO.	DATE	DRAWN BY:	CHECKED BY:
4670	3/30/2022	CMI/BPW	BPW

67 KENNEDY ROAD WAREHOUSE & DISTRIBUTION CENTER
352 SULLIVAN AVENUE, 67 & 68 KENNEDY ROAD
SOUTH WINDSOR, CONNECTICUT 06074
GIS NOS: 87300352, 49800067, & 49800068

NO.	DATE	REVISIONS	BY:

EROSION & SEDIMENTATION CONTROL PLAN

SCALE: 0 20' 40' 80'
1" = 40'

SHEET
C-ES1
SHEET 11 OF 24

File: C:\jobs\4670\Engineering\AutoCAD\4670 E-S Plan.dwg Layout: 11 C-ES1 Plotted 3/30/2022 11:59 AM Last Saved 3/30/2022 11:57 AM Last Saved By: berwheeler

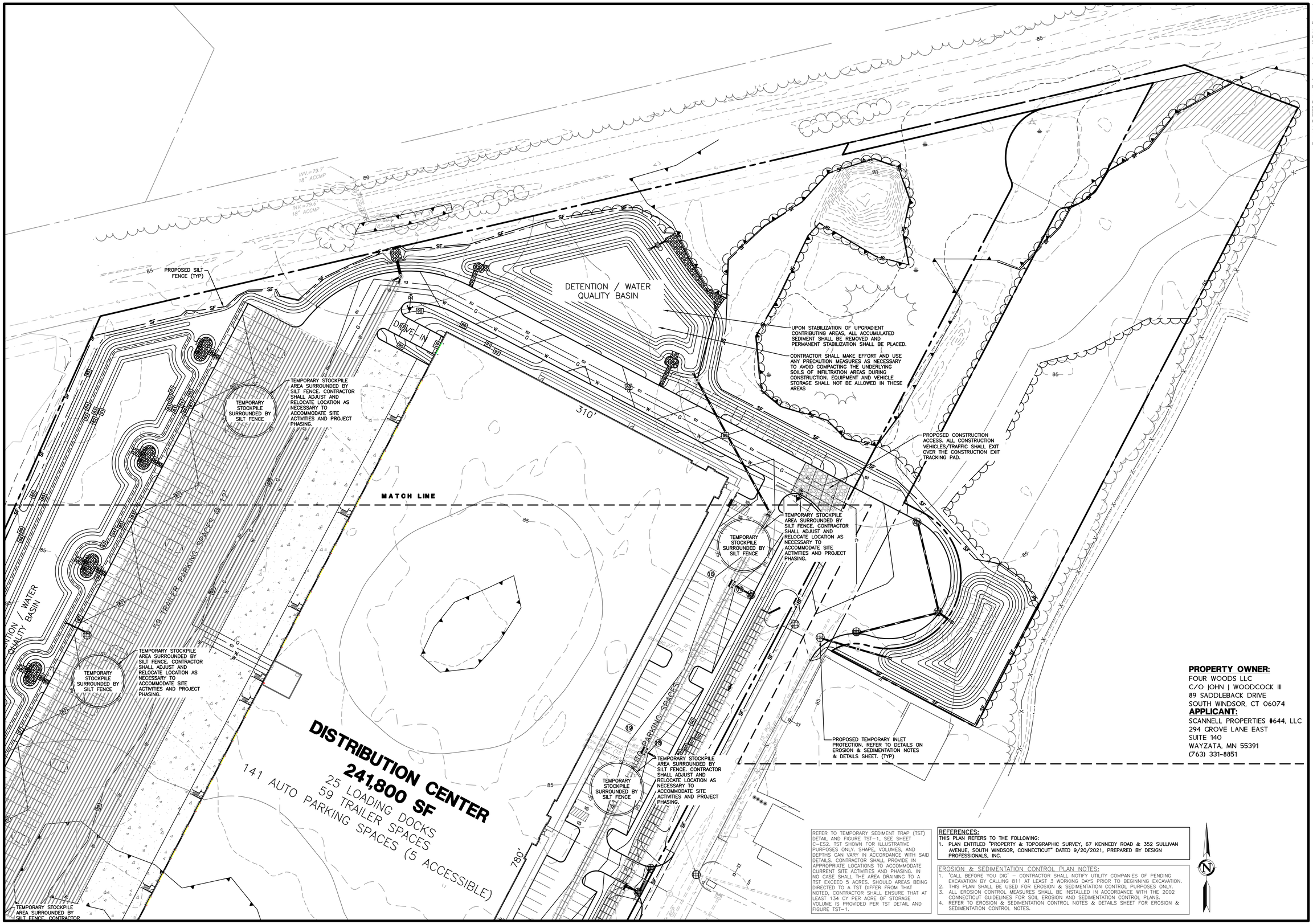

PROPERTY OWNER:
FOUR WOODS LLC
C/O JOHN J WOODCOCK III
89 SADDLEBACK DRIVE
SOUTH WINDSOR, CT 06074

APPLICANT:
SCANNELL PROPERTIES #644, LLC
294 GROVE LANE EAST
SUITE 140
WAYZATA, MN 55391
(763) 331-8851

REFER TO TEMPORARY SEDIMENT TRAP (TST) DETAIL AND FIGURE TST-1, SEE SHEET C-ES2. TST SHOWN FOR ILLUSTRATIVE PURPOSES ONLY. SHAPE, VOLUMES, AND DEPTHS CAN VARY IN ACCORDANCE WITH SAID DETAILS. CONTRACTOR SHALL PROVIDE IN APPROPRIATE LOCATIONS TO ACCOMMODATE CURRENT SITE ACTIVITIES AND PHASING. IN NO CASE SHALL THE AREA DRAINING TO A TST EXCEED 5 ACRES. SHOULD AREAS BEING DIRECTED TO A TST DIFFER FROM THAT NOTED, CONTRACTOR SHALL ENSURE THAT AT LEAST 134 CY PER ACRE OF STORAGE VOLUME IS PROVIDED PER TST DETAIL AND FIGURE TST-1.

REFERENCES:
THIS PLAN REFERS TO THE FOLLOWING:
1. PLAN ENTITLED "PROPERTY & TOPOGRAPHIC SURVEY, 67 KENNEDY ROAD & 352 SULLIVAN AVENUE, SOUTH WINDSOR, CONNECTICUT" DATED 9/20/2021, PREPARED BY DESIGN PROFESSIONALS, INC.

EROSION & SEDIMENTATION CONTROL PLAN NOTES:
1. 'CALL BEFORE YOU DIG' – CONTRACTOR SHALL NOTIFY UTILITY COMPANIES OF PENDING EXCAVATION BY CALLING 811 AT LEAST 3 WORKING DAYS PRIOR TO BEGINNING EXCAVATION.
2. THIS PLAN SHALL BE USED FOR EROSION & SEDIMENTATION CONTROL PURPOSES ONLY.
3. ALL EROSION CONTROL MEASURES SHALL BE INSTALLED IN ACCORDANCE WITH THE 2002 CONNECTICUT GUIDELINES FOR SOIL EROSION AND SEDIMENTATION CONTROL PLANS.
4. REFER TO EROSION & SEDIMENTATION CONTROL NOTES & DETAILS SHEET FOR EROSION & SEDIMENTATION CONTROL NOTES.

Copyright © 2022 Design Professionals, Inc. – All Rights Reserved

21 FIDELITY DRIVE
PO BOX 1009
SOUTH WINDSOR, CT 06074
860-291-8755 – T
860-291-8757 – F
www.designprofessionals.com
design professionals
CIVIL & TRAFFIC ENGINEERS / LAND SURVEYORS
PLANNERS / LANDSCAPE ARCHITECTS

1. The plans, maps, plans & specs, the ideas, designs and plans indicated or represented by this drawing are the original property of the Professional Engineer, Land Surveyor or Landscape Architect.
2. Reproduction techniques used in the production of this plan (pen on mylar) or prints, the paper Drafting Film, the ink used to produce the plan, and the CAD electronic information is required.
3. The plans and other plans prepared by Design Professionals, Inc. are instruments of service and remain the property of Design Professionals, Inc. Reproduction, publication or use of these plans by OWNER, possession and CAD electronic information is required. Any other use or reuse, without written consent of Design Professionals, Inc. is prohibited and will be at OWNER's sole risk and without liability to Design Professionals, Inc. OWNER shall indemnify and hold Design Professionals, Inc. harmless from any claims or damages resulting from such use or reuse.

PREPARED FOR:
Scannell Properties #644, LLC
294 Grove Lane East
Suite 140
Wayzata, MN 55391
763-331-8851 T

PROJECT NO.	4670
DATE	3/30/2022
DRAWN BY:	CHI/BPW
CHECKED BY:	CHI/BPW
REVIEWED BY:	BPW

67 KENNEDY ROAD
WAREHOUSE &
DISTRIBUTION CENTER
352 SULLIVAN AVENUE, 67 & 68 KENNEDY ROAD
SOUTH WINDSOR, CONNECTICUT 06074
GIS NOs: 87300352, 49800067, & 49800068

REVISIONS

NO.	DATE		BY

EROSION & SEDIMENTATION CONTROL PLAN

SCALE: 1" = 40'
0 20' 40' 80'

SHEET
C-ES2
SHEET 12 OF 24

File: C:\jobs\4670\Engineering\AutoCAD\4670 E-S Plan.dwg Layout: 12 C-ES2 Plotted: 3/30/2022 12:00 PM Last Saved: 3/30/2022 11:57 AM Last Saved By: benwheeler

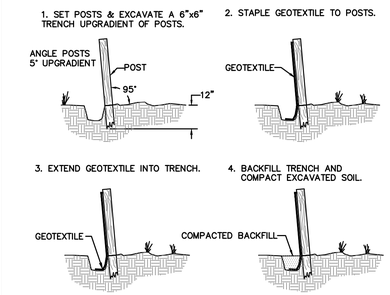

SILT FENCE

N.T.S.

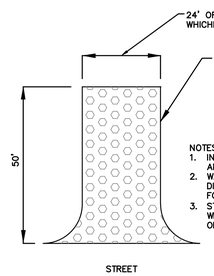

CONSTRUCTION ACCESS

N.T.S.

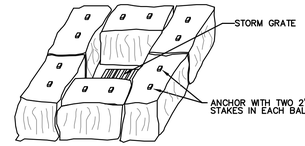

STRAW BALE INSTALLATION AT CATCH BASINS

N.T.S.

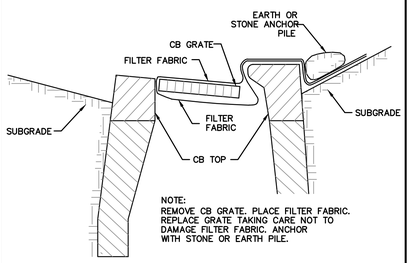

CATCH BASIN GRATE SEDIMENTATION CONTROL

N.T.S.

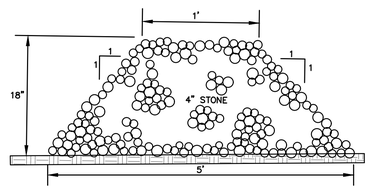

STONE CHECK DAM

N.T.S.

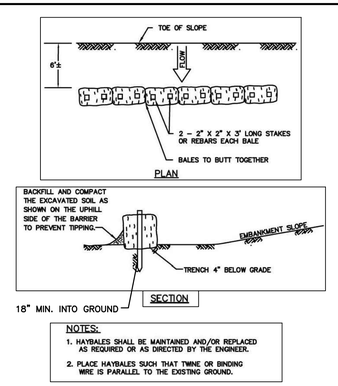

STRAW BALES FOR EROSION CONTROL

N.T.S.

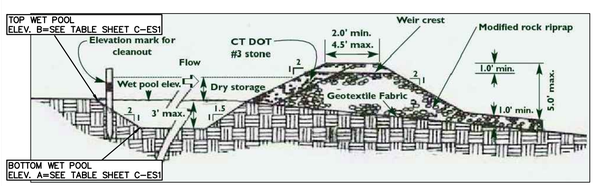

REFER TO 2002 CT GUIDELINES FOR SOIL AND SEDIMENT CONTROL FOR ADDITIONAL DETAIL AND REQUIREMENTS.

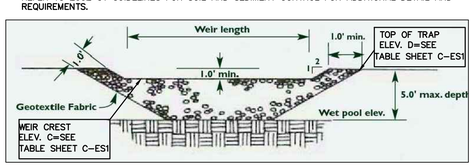

Figure TST-1 Formula for Figuring Temporary Sediment Trap Storage Requirements

Wet storage volume may be approximated as follows:

$$Vw = 0.85 \times A_W \times D_W$$

where,

V_W = the wet storage volume in cubic feet
A_W = the surface area of the flooded area at the base of the stone outlet in square feet
D_W = the maximum depth in feet, measured from the low point in the trap to the base of the stone outlet.

Dry storage volume may be approximated as follows:

$$V_d = \frac{(A_W + A_d)}{2} \times D_d$$

where,

V_d = the dry storage volume
A_W = the surface area of the flooded area at the base of the stone outlet in square feet.
A_d = the surface area of the flooded area at the top of the stone outlet (over flow mechanism), in square feet
D_d = the depth in feet, measured from the base of the stone outlet to the top of the stone outlet

Note: Conversion between cubic feet and cubic yards is: cubic feet x 0.037 = cubic yards.

NOTE:

1. VOLUME OF TST SHALL BE A MINIMUM OF 134 CUBIC YARDS PER ACRE DRAINING TO IT. HALF OF THE REQUIRED VOLUME SHALL BE FOR WET STORAGE WHILE THE OTHER HALF SHALL BE FOR DRY STORAGE. REFER TO GENERAL SIZING CALCULATIONS FOR TST BELOW.

TEMPORARY SEDIMENT TRAP

N.T.S.

NOTES:

1) CONTRACTOR SHALL LIMIT CONTRIBUTING AREA TO DIVERSION SWALES TO 1 ACRE OR LESS, AND SHALL BE INSTALLED AT GRADES OF 2% OR LESS.

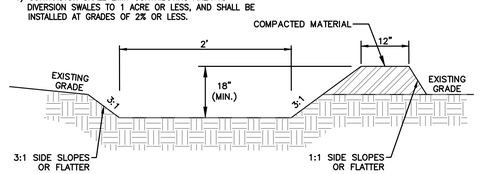

TEMPORARY DIVERSION SWALE

N.T.S.

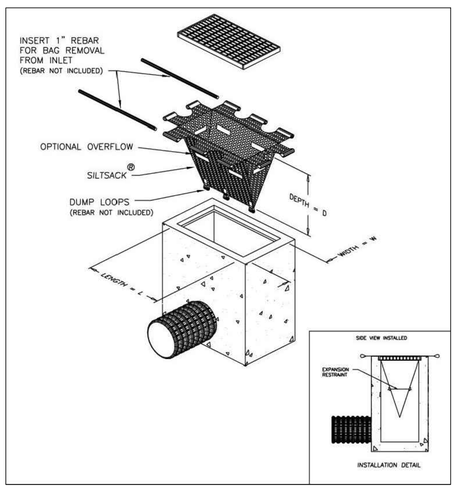

CURB-LESS INLET PROTECTION DETAIL

N.T.S.

CONSTRUCTION SEQUENCE:

1. INSTALL CONSTRUCTION ACCESS AT DRIVEWAYS OR OTHER LOCATIONS AS SHOWN ON PLANS. MAINTAIN THE CONSTRUCTION ENTRANCE IN A CONDITION WHICH WILL PREVENT TRACKING AND WASHING OF SEDIMENT ONTO ABUTTING PAVED SURFACES. ADD STONE OR INCREASE THE LENGTH AS CONDITIONS DEMAND.

2. STAKE-OUT THE LIMITS OF CLEARING AND GRUBBING. INSTALL EROSION AND SEDIMENTATION CONTROL MEASURES AT LIMITS OF CLEARING AND GRUBBING. CONTRACTOR TO CONDUCT ALL CONSTRUCTION ACTIVITIES WITHIN LIMITS SHOWN ON PLAN.

3. CONSTRUCT TEMPORARY SEDIMENT BASINS AND/OR TRAPS AS SHOWN ON THE PLANS.

4. REMOVE TOPSOIL FROM AREAS OF DISTURBANCE AND STOCKPILE. POSSIBLE STOCKPILE LOCATIONS ARE SHOWN ON THE SITE PLANS. HOWEVER, LOCATIONS SHALL BE DETERMINED BY CONTRACTOR WITH APPROVAL BY THE ENGINEER & LOCAL AUTHORITY HAVING JURISDICTION. RING SOIL STOCKPILES WITH A ROW OF SILT FENCE.

5. ESTABLISH VEGETATION ON ALL DISTURBED SOIL THAT WILL REMAIN EXPOSED FOR LONGER THAN 30 DAYS. SEED WITHIN 7 DAYS AFTER THE SUSPENSION OF GRADING WORK WITH A TEMPORARY SEED MIXTURE PER SECTION 5-3 "VEGETATIVE SOIL COVER" OF THE "2002 CONNECTICUT GUIDELINES FOR SOIL EROSION AND SEDIMENT CONTROL." (IF DRAINING TO IMPAIRED WATER: ESTABLISH VEGETATION ON ALL DISTURBED SOIL THAT WILL REMAIN EXPOSED FOR LONGER THAN 14 DAYS. SEED WITHIN 3 DAYS AFTER THE SUSPENSION OF GRADING WORK WITH A TEMPORARY SEED MIXTURE PER SECTION 5-3 "VEGETATIVE SOIL COVER" OF THE "2002 CONNECTICUT GUIDELINES FOR SOIL EROSION AND SEDIMENT CONTROL.")

6. CREATE TEMPORARY DIVERSION SWALES AS REQUIRED.

7. ANY DEWATERING ACTIVITIES SHALL BE PUMPED TO TEMPORARY SILTATION BASINS AT THE TOP OF THE SLOPE. PUMPED DISCHARGE MUST UTILIZE SILT-SAC OR APPROVED EQUAL. MONITOR TO ENSURE DISCHARGE FROM BASIN IS NOT CAUSING EROSION DOWNSTREAM.

8. INSTALL STORM DRAINAGE SYSTEM. PROTECT CATCHBASINS AND CULVERT INLETS/OUTLETS WITH INLET PROTECTION AS SHOWN IN THE DETAILS.

9. INSTALL PAVEMENT, SIDEWALKS, CURBING, TOPSOIL, GRASS SEED, AND MULCH.

10. AFTER STABILIZATION OF UPGRADIENT CONTRIBUTING AREAS TO THE TEMPORARY SEDIMENT BASINS AND/OR TRAPS, ALL ACCUMULATED SEDIMENT SHALL BE REMOVED AND PERMANENT STABILIZATION SHALL BE PLACED.

11. MINOR ADJUSTMENTS TO THE EXCAVATION LIMITS MAY BE WARRANTED WITH APPROVAL OF LOCAL AUTHORITY HAVING JURISDICTION TO ALLOW FOR PRESERVATION OF EXISTING VEGETATION.

12. ALL EROSION CONTROL DEVICES SHALL REMAIN FUNCTIONAL AND IN PLACE THROUGHOUT THE CONSTRUCTION EFFORT UNTIL THE SITE IS FULLY STABILIZED WITH VEGETATION.

STORM DRAINAGE SYSTEM MAINTENANCE AND OPERATION:

THE FOLLOWING MAINTENANCE SHALL BE REQUIRED TO ENSURE EFFICIENT OPERATION OF THE STORM DRAINAGE SYSTEM, DETENTION BASIN, AND UNDERGROUND BASINS. THE MAINTENANCE SCHEDULE IS INTENDED TO BE A GUIDE. AN INSPECTION OF ALL STORM DRAINAGE COMPONENTS IS REQUIRED FOLLOWING LARGE STORM EVENTS (0.5 INCHES OR GREATER) THAT COULD CAUSE THE DEPOSITION OF EXCESS DEBRIS.

PIPE OUTLET LOCATIONS: PIPE OUTLETS AND ASSOCIATED RIPRAP SHALL BE INSPECTED ANNUALLY AND CLEANED OF SILT AND/OR DEBRIS. RIPRAP SHALL BE RE-SHAPED AND REPLENISHED AS REQUIRED.

CATCHBASINS: SHALL BE INSPECTED ANNUALLY AND SUMPS CLEANED WHEN DEPTH OF MATERIAL REACHES TWELVE INCHES.

PAVEMENT SWEEPING: PAVEMENT AREAS SHALL BE SWEPT AT LEAST TWICE PER YEAR. ONCE IN THE SPRING SHORTLY AFTER THE END OF THE SNOW SEASON, AND IN THE FALL AFTER THE LEAVES HAVE FALLEN. DURING CONSTRUCTION KEEP PAVEMENT FREE OF SEDIMENTS TO REDUCE THE TRANSFER OF SEDIMENTS OFFSITE.

OUTLET STRUCTURE: SHALL BE INSPECTED ANNUALLY AND SUMP CLEANED WHEN DEPTH OF MATERIAL REACHES TWELVE INCHES. IN THE EVENT OF A MAJOR RAINSTORM, (0.5 INCHES OF RAIN OR MORE) THE OUTLET STRUCTURE SHALL BE INSPECTED TO ENSURE PROTECTIVE SCREENS ARE CLEAR OF ANY DEBRIS OR OBSTRUCTING ITEMS.

UNDERGROUND DETENTION/INFILTRATION SYSTEM: SHALL BE INSPECTED BI-ANNUALLY. REFER TO MANUFACTURING MAINTENANCE REQUIREMENTS.

INFILTRATION BASINS, DETENTION BASINS, AND SEDIMENT FOREBAYS: SHALL BE INSPECTED BIANNUALLY. ALL LARGE WOODY NON LANDSCAPE GROWTH THAT MAY AFFECT THE FLOW OF WATER OR THE STABILITY OF THE BASIN SHALL BE REMOVED. RIPRAP SHALL BE RE-ARRANGED AND ADDED TO AS REQUIRED. ANY EROSION OR OTHER PROBLEMS THAT MAY AFFECT THE PROPER OPERATION OF THE BASIN SHALL BE REPAIRED PROMPTLY. ACCUMULATED SEDIMENT SHALL BE REMOVED.

WATER QUALITY BASIN: SHALL BE INSPECTED TWICE PER YEAR, ALL WOODY, NON LANDSCAPE GROWTH SHALL BE REMOVED. ANY EROSION/RILLS NOTED WITHIN THE BASIN SHALL BE REPAIRED TO PROVIDE STABILIZED SURFACES. ANY EROSION OR OTHER NOTED DEFICIENCIES THAT WOULD AFFECT THE OPERATION OF THE BASIN OR CAUSE RESOURCE AREA IMPACTS SHALL BE REMEDIED IMMEDIATELY. THE BASIN SHALL BE MONITORED TO ASSURE PROPER DEWATERING/EMPTYING OF STORMWATER. BASIN SHALL COMPLETELY DEWATER/EMPTY WITH 72 HOURS AFTER A STORM EVENT. IF STANDING WATER IS OBSERVED AFTER THIS 72 HOUR PERIOD, THE BOTTOM OF BASIN SHALL BE EXCAVATED TO THE UPPER LAYER OF THE FILTER FABRIC/SUB-DRAIN, AND REPLACE WITH 4" OF LOAM AND SEED.

WATER QUALITY UNIT: UNIT SHALL BE INSPECTED POST-CONSTRUCTION, PRIOR TO BEING PUT INTO SERVICE. INSPECT EVERY SIX MONTHS FOR THE FIRST YEAR OF OPERATION TO DETERMINE THE OIL AND SEDIMENT ACCUMULATION RATE. IN SUBSEQUENT YEARS, INSPECTIONS CAN BE BASED ON FIRST-YEAR OBSERVATIONS OR LOCAL REQUIREMENTS. CLEANING IS RECOMMENDED ONCE THE SEDIMENT DEPTH REACHES 15% OF STORAGE CAPACITY, (GENERALLY TAKING ONE YEAR OR LONGER). REFER TO MANUFACTURING MAINTENANCE REQUIREMENTS.

EROSION & SEDIMENTATION CONTROL MAINTENANCE AND INSPECTION PROGRAM (WEEKLY CONSTRUCTION REPORTS):

PER RECOMMENDATIONS MADE IN THE 2002 CONNECTICUT GUIDELINES FOR SOIL EROSION AND SEDIMENTATION CONTROL PLAN, THE CONTRACTOR SHALL MAINTAIN WEEKLY REPORTS ON THE CONDITION OF ALL EROSION CONTROL MEASURES AND MAKE THEM AVAILABLE UPON REQUEST OF OWNER, LOCAL AUTHORITY HAVING JURISDICTION, OR ENGINEER. IN THE EVENT OF A MAJOR RAINSTORM, (0.5 INCHES OR GRATER) REPORTS SHALL BE PREPARED WITHIN 24 HOURS OF SAID EVENT.

EROSION & SEDIMENTATION CONTROL NARRATIVE

1. PRIOR TO THE START OF CONSTRUCTION, ALL EROSION CONTROL DEVICES SHALL BE INSTALLED IN CONFORMANCE WITH THESE PLANS.

2. CONTRACTOR IS RESPONSIBLE FOR IMPLEMENTATION OF ALL SEDIMENTATION AND EROSION CONTROL MEASURES SHOWN ON THESE PLANS. THIS RESPONSIBILITY INCLUDES IMPLEMENTATION AS WELL AS MAINTENANCE. ANY PROPOSED CHANGES TO THIS PLAN MUST BE APPROVED BY THE ENGINEER AND/OR THE LOCAL AUTHORITY HAVING JURISDICTION.

3. CONSTRUCTION ACCESS SHALL BE INSPECTED REGULARLY TO ENSURE PROPER OPERATION. STONE SHALL BE ADDED OR REPLACED AS REQUIRED.

4. CONTRACTOR SHALL BE RESPONSIBLE FOR MAINTAINING ADJACENT ROADWAYS, (BOTH PUBLIC & COMPLETED PORTIONS OF THE PROJECT) FREE FROM ACCUMULATED DUST AND DIRT. STREETS SHALL BE SWEPT CLEAN AT ALL TIMES.

5. AREAS WHERE CONSTRUCTION ACTIVITIES HAVE PERMANENTLY CEASED OR WHEN FINAL GRADES ARE REACHED IN ANY PORTION OF THE SITE, SHALL BE STABILIZATION WITH FINAL VEGETATION WITHIN 7 DAYS. AREAS TO BE LEFT BARE FOR MORE THAN 30 DAYS SHALL BE TREATED WITH AIR DRIED WOOD CHIP MULCH (6 CYDS / 1000 S.F.) OR SEEDED WITH PERENNIAL RYE-GRASS UNTIL FINAL GRADING AND STABILIZATION TAKES PLACE. WINTER STABILIZATION SHALL INCLUDE MULCH/STRAW OR HAY APPLIED AT THE SAME RATE WITH A TACKIFIER PER RECOMMENDATIONS MADE IN THE 2002 CONNECTICUT GUIDELINES FOR SOIL EROSION AND SEDIMENT CONTROL.

6. ALL DISTURBED SLOPES EXCEEDING A 3:1 SLOPE SHALL IMMEDIATELY RECEIVE MULCH AND TEMPORARY SEEDING IN ACCORDANCE WITH THE FOLLOWING APPLICATION RATES:

MULCH:	RATE:
STRAW	90# / 1000 S.F.
TEMPORARY SEEDING:	RATE:
PERENNIAL RYEGRASS	1.0# / 1000 S.F.

7. CONTRACTOR SHALL CLEAN CATCHBASIN SUMPS, DIVERSION SWALES, & TEMPORARY SETTLING SUMPS AS REQUIRED DURING CONSTRUCTION.

8. DURING EARTHWORK OPERATIONS, CONTRACTOR SHALL MANAGE STORMWATER RUNOFF SO THAT NO DIRECT DISCHARGE OF RUNOFF THAT CONTAINS SUSPENDED PARTICLES, FLOWS INTO RECEIVING WATERS. RUNOFF SHALL BE DIRECTED INTO TEMPORARY SEDIMENT SUMPS AND TREATED.

9. AT NO TIME DURING THE CONSTRUCTION EFFORT SHALL THERE BE ANY OPEN AND DISTURBED AREA GREATER THAN 5 ACRES WITHOUT SILT FENCE PERIMETER OF SET AREA.

10. AFTER ALL SITE WORK IS COMPLETED, INCLUDING THE SPREADING OF TOPSOIL AND SEEDING, THE CONTRACTOR SHALL CLEAN ANY SILT OR DEBRIS FROM ALL STORM DRAINAGE STRUCTURES AND CULVERTS.

11. AT ALL TIMES DURING THE CONSTRUCTION EFFORT, THE CONTRACTOR SHALL HAVE AVAILABLE THE APPROPRIATE EQUIPMENT FOR WATER APPLICATION FOR THE PURPOSES OF ALLAYING DUST. APPLY WATER, SUITABLE MATERIALS, OR COVERS TO MATERIAL STOCKPILES AND OTHER SURFACES THAT CAN GIVE RISE TO AIRBORNE PARTICULATE MATTER. COVER, WHILE IN MOTION, OPEN-BODIED TRUCKS OR OPEN-BODIED TRAILERS. MINIMIZE THE VOLUME OF WATER SPRAYED FOR CONTROLLING DUST AS TO PREVENT THE RUNOFF OF WATER. NO DISCHARGE OF DUST CONTROL WATER SHALL CONTAIN OR CAUSE A VISIBLE OIL SHEEN, FLOATING SOLIDS, VISIBLE DISCOLORATION, OR FOAMING IN THE RECEIVING STREAM.

12. THE DEVELOPER SHALL ENSURE THAT CONSTRUCTION ACTIVITIES COMPLY WITH THE NOISE ORDINANCES OF THE AUTHORITY HAVING JURISDICTION.

13. THE CONTRACTOR SHALL EXCAVATE A PIT TO BE DESIGNATED AS A WASHOUT AREA FOR CONCRETE, PAINT, AND OTHER MATERIALS. THIS AREA SHALL BE CLEARLY FLAGGED AND CONSTRUCTED TO BE ENTIRELY SELF-CONTAINED. THIS AREA SHALL BE OUTSIDE OF ANY BUFFERS AND AT LEAST 50 FEET FROM ANY STREAM, WETLAND, OR OTHER SENSITIVE SOURCE. DUMPING OF LIQUID WASTES IN STORM SEWERS IS PROHIBITED. THE WASHOUT AREA SHALL BE INSPECTED AT LEAST ONCE A WEEK TO ENSURE STRUCTURAL INTEGRITY, ADEQUATE HOLDING CAPACITY, AND TO CHECK FOR LEAKS AND OVERFLOWS. ACCUMULATED DEBRIS SHOULD BE REMOVED ONCE THE WASHOUT AREA REACHES HALF WAY FULL OR IS DEEMED NECESSARY TO AVOID OVERFLOWS. REMOVE AND DISPOSE OF HARDENED CONCRETE WASTE CONSISTENT WITH PRACTICES DEVELOPED FOR THE WASTE DISPOSAL.

14. THE CONTRACTOR SHALL DESIGNATE A WASTE DISPOSAL AREA FOR TEMPORARY STORAGE OF MATERIALS TO BE REMOVED FROM THE SITE. THE DESIGNATED WASTE AREA SHALL BE SELECTED AS TO MINIMIZE TRUCK TRAVEL THROUGH THE SITE. THE AREA WILL NOT DRAIN DIRECTLY TO ADJACENT WETLANDS. PICKUPS SHALL BE SCHEDULED REGULARLY TO PREVENT THE CONTAINERS FROM OVERFILLING. SPILLS SHALL BE CLEANED UP IMMEDIATELY. DEFECTIVE CONTAINERS THAT MAY CAUSE LEAKS OR SPILLS WILL BE IDENTIFIED THROUGH REGULAR INSPECTION. ANY FOUND TO BE DEFECTIVE WILL BE REPAIRED OR REPLACED IMMEDIATELY. ANY STOCKPILING OF MATERIALS SHOULD BE CONFINED TO THE DESIGNATED AREA AS DEFINED BY THE CONTRACTOR.

15. ALL CHEMICAL AND PETROLEUM PRODUCT CONTAINERS STORED ON THE SITE (EXCLUDING THOSE CONTAINED WITHIN VEHICLES AND EQUIPMENT) SHALL BE PROVIDED WITH IMPERMEABLE CONTAINMENT WHICH WILL HOLD AT LEAST 110% OF THE VOLUME OF THE LARGEST CONTAINER, OR 10% OF THE TOTAL VOLUME OF ALL CONTAINERS IN THE AREA, WHICHEVER IS LARGER, WITHOUT OVERFLOW FROM THE CONTAINMENT AREA. ALL CHEMICALS AND THEIR CONTAINERS SHALL BE STORED UNDER A ROOFED AREA EXCEPT FOR THOSE CHEMICALS STORED IN CONTAINERS OF 100 GALLON CAPACITY OR MORE, IN WHICH CASE A ROOF IS NOT REQUIRED. DOUBLE-WALLED TANKS SATISFY THIS REQUIREMENT.

16. CONTRACTOR SHALL COORDINATE WITH THE PROPER AGENCIES FOR RELOCATION OF ANY UTILITIES OR SIGNS.

17. IF REQUIRED, AN APPROVED EROSION CONTROL BOND SHALL BE PREPARED BEFORE THE START OF ANY CONSTRUCTION ACTIVITY.

18. FROZEN MATERIAL SHALL NOT BE USED FOR FILL NOR SHALL FILL BE PLACED OR COMPACTED ON FROZEN GROUND.

ESTIMATED CONSTRUCTION START DATE - SUMMER 2020
ESTIMATED COMPLETION DATE - SUMMER 2021

CONSTRUCTION DUST CONTROL NOTES

- IDENTIFY AND ADDRESS SOURCES OF DUST GENERATED BY CONSTRUCTION ACTIVITIES. LIMIT CONSTRUCTION TRAFFIC TO PREDETERMINED ROUTES. PAVED SURFACES REQUIRE MECHANICAL SWEEPERS TO REMOVE SOIL THAT HAS BEEN DEPOSITED OR TRACKED ONTO THE PAVEMENT. ON UNPAVED TRAVELWAYS AND TEMPORARY HAUL ROADS, USE ROAD CONSTRUCTION STABILIZATION MEASURES AND/OR WATER AS NEEDED TO KEEP SURFACE DAMP. STATIONARY SOURCES OF DUST, SUCH AS ROCK CRUSHERS, USE FINE WATER SPRAYS TO CONTROL DUST. IF WATER IS EXPECTED TO BE NEEDED FOR DUST CONTROL, IDENTIFY THE SOURCE OF WATER IN ADVANCE. PUMPING FROM STREAMS, POND AND SIMILAR WATERBODIES MAY REQUIRE APPROVAL FROM THE MUNICIPAL INLAND WETLAND AGENCY.
- IDENTIFY AND ADDRESS SOURCES OF WIND GENERATED DUST. PROVIDE SPECIAL CONSIDERATION TO HILL TOPS AND LONG REACHES OF OPEN GROUND WHERE SLOPES MAY BE EXPOSED TO HIGH WINDS. CONSIDER BREAKING UP LONG REACHES WITH TEMPORARY WINDBREAKS CONSTRUCTED FROM BRUSH PILES, GEOTEXTILE SILT FENCES OR HAY BALES. PLAN ON STABILIZING SLOPES EARLY. MULCH FOR SEED WILL REQUIRE ANCHORING WHEN USED.
- CONSIDER WATER QUALITY WHEN SELECTING THE METHOD AND/OR MATERIALS USED FOR DUST CONTROL. WHEN CONSIDERING THE USE OF CALCIUM CHLORIDE, BE AWARE OF THE FOLLOWING: THE RECEIVING SOIL'S PERMEABILITY SO AS TO PREVENT GROUNDWATER CONTAMINATION; THE TIMING OF THE APPLICATION TO RAINFALL TO PREVENT WASHING OF SALTS INTO SENSITIVE AREAS SUCH AS WETLANDS AND WATERCOURSES; AND PROXIMITY TO SENSITIVE AREAS SUCH AS WATERCOURSES, PONDS, ESTABLISHED OR SOON TO BE ESTABLISHED AREA OF PLANTINGS, WHERE SALTS COULD IMPAIR OR DESTROY PLANT AND ANIMAL LIFE. ADDITIONALLY, SOME MATERIALS USED FOR DUST CONTROL MAY BE RENDERED INEFFECTIVE BY DEGRADED WATER QUALITY IF IT IS USED FOR MIXING.
- CONSIDER USING DUST CONTROL MEASURES ONLY AFTER IT IS DETERMINED THAT OTHER MEASURES FOR SOIL STABILIZATION CANNOT BE PRACTICALLY APPLIED.
- USE MECHANICAL SWEEPING ON PAVED AREAS WHERE DUST AND FINE MATERIALS ACCUMULATE AS A RESULT OF TRUCK TRAFFIC, PAVEMENT SAW CUTTING SPILLAGE, AND WIND OR WATER DEPOSITION FROM ADJACENT DISTURBED AREAS. SWEEP DAILY IN HEAVILY TRAFFICKED AREAS.
- PERIODICALLY MOISTEN EXPOSED SOIL SURFACES ON UNPAVED TRAVELWAYS TO KEEP THE TRAVELWAY DAMP.
- NON-ASPHALTIC SOIL TACKIFIER CONSISTS OF AN EMULSIFIED LIQUID SOIL STABILIZER OF ORGANIC, INORGANIC OR MINERAL ORIGIN, INCLUDING, BUT NOT LIMITED TO THE FOLLOWING: MODIFIED RESINS, CALCIUM CHLORIDE, COMPLEX SURFACTANT, COPOLYMERS OR HIGH GRADE LATEX ACRYLICS. THE SOLUTIONS SHALL BE NONASPHALTIC, NONTOXIC TO HUMAN, ANIMAL AND PLANT LIFE, NONCORROSIVE AND NONFLAMMABLE. MATERIALS USED SHALL MEET LOCAL, STATE AND FEDERAL GUIDELINES FOR INTENDED USE. ALL MATERIALS ARE TO BE APPLIED ACCORDING TO THE MANUFACTURER'S RECOMMENDATIONS AND ALL SAFETY GUIDELINES SHALL BE FOLLOWED IN STORING, HANDLING AND APPLYING MATERIALS.
- REPEAT APPLICATION OF DUST CONTROL MEASURES WHEN FUGITIVE DUST BECOMES EVIDENT.

PROJECT CONTACT INFO:

[APPLICANT NAME]
[XXX-XXX-XXXX]

PROPERTY OWNER:
FOUR WOODS LLC
C/O JOHN J WOODCOCK III
89 SADDLEBACK DRIVE
SOUTH WINDSOR, CT 06074
APPLICANT:
SCANNELL PROPERTIES #644, LLC
294 GROVE LANE EAST
SUITE 140
WAYZATA, MN 55391
(763) 331-8851

Copyright © 2022 Design Professionals, Inc. - All Rights Reserved

21 FERNCY DRIVE
PO BOX 1766
SOUTH WINDSOR, CT 06074
860-291-8755 - T
860-291-8757 - F
www.designprofessionals.com
design professionals
CIVIL & TRAFFIC ENGINEERS / LAND SURVEYORS
PLANNERS / LANDSCAPE ARCHITECTS

* This plan is valid only if bears the seal or stamp and original signature of the Professional Engineer, Land Surveyor or Landscape Architect.
* Reproduction techniques used in the production of this plan can smear or shrink the paper. Scale of this plan may be different than shown. Contact DP, if additional information is required.
* This plan and other plans prepared by Design Professionals, Inc. are the property of the firm and remain its property. The use of these plans by DPI, the owner or others for purposes other than those for which they were prepared, and DPI's additional use of DPI's plans, is strictly prohibited without DPI's written consent.

PREPARED FOR:
Scannell Properties #644, LLC
294 Grove Lane East
Suite 140
Wayzata, MN 55391
763-331-8851 T

PROJECT NO. 4670
DATE: 3/30/2022
DESIGNED BY: CMJ/BPW
DRAWN BY: CMJ/BPW
CHECKED BY: BPW

67 KENNEDY ROAD WAREHOUSE & DISTRIBUTION CENTER
352 SULLIVAN AVENUE, 67 & 68 KENNEDY ROAD
SOUTH WINDSOR, CONNECTICUT 06074
GIS NOs: 87300352, 49800067, & 49800068

REVISIONS

NO.	DATE		BY

EROSION & SEDIMENTATION DETAILS & NOTES

SHEET
C-ES3
SHEET 13 OF 24

File: C:\jobs\4670\Engineering\AutoCAD\4670 E-S Plan.dwg Layout: 13 C-ES3 Plotted: 3/30/2022 12:00 PM Last Saved: 3/30/2022 11:57 AM Last Saved By: benwheeler

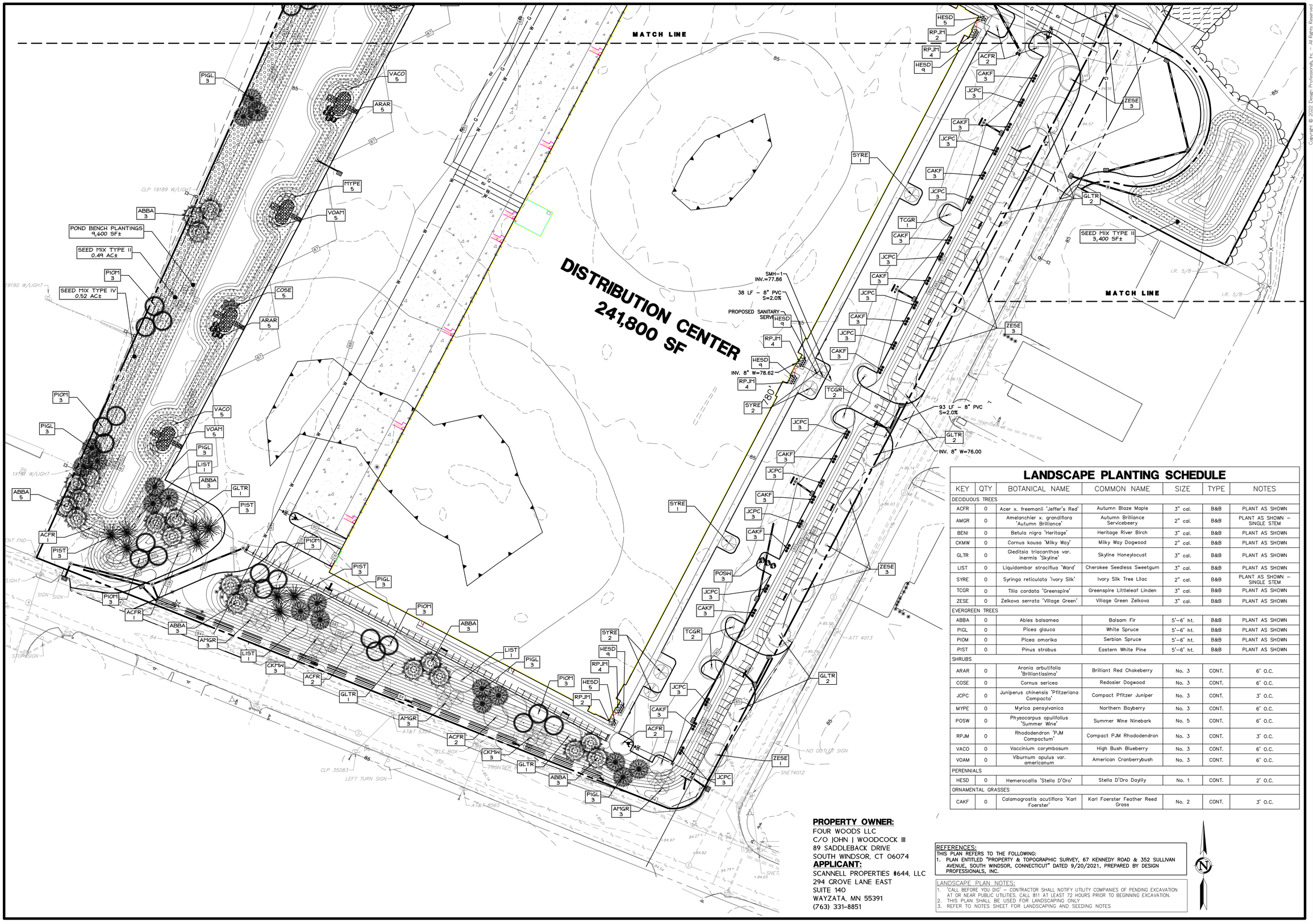

LANDSCAPE PLANTING SCHEDULE

KEY	QTY	BOTANICAL NAME	COMMON NAME	SIZE	TYPE	NOTES
DECIDUOUS TREES						
ACFR	0	Acer x. freemanii 'Jeffer's Red'	Autumn Blaze Maple	3" cal.	B&B	PLANT AS SHOWN
AMGR	0	Amelanchier x. grandiflora 'Autumn Brilliance'	Autumn Brilliance Servicebeery	2" cal.	B&B	PLANT AS SHOWN – SINGLE STEM
BENI	0	Betula nigra 'Heritage'	Heritage River Birch	3" cal.	B&B	PLANT AS SHOWN
CKMW	0	Cornus kousa 'Milky Way'	Milky Way Dogwood	2" cal.	B&B	PLANT AS SHOWN
GLTR	0	Gleditsia triacanthos var. inermis 'Skyline'	Skyline Honeylocust	3" cal.	B&B	PLANT AS SHOWN
LIST	0	Liquidambar straciflua 'Ward'	Cherokee Seedless Sweetgum	3" cal.	B&B	PLANT AS SHOWN
SYRE	0	Syringa reticulata 'Ivory Silk'	Ivory Silk Tree Lilac	2" cal.	B&B	PLANT AS SHOWN – SINGLE STEM
TCGR	0	Tilia cordata 'Greenspire'	Greenspire Littleleaf Linden	3" cal.	B&B	PLANT AS SHOWN
ZESE	0	Zelkova serrata 'Village Green'	Village Green Zelkova	3" cal.	B&B	PLANT AS SHOWN
EVERGREEN TREES						
ABBA	0	Abies balsamea	Balsam Fir	5'–6' ht.	B&B	PLANT AS SHOWN
PIGL	0	Picea glauca	White Spruce	5'–6' ht.	B&B	PLANT AS SHOWN
PIOM	0	Picea omorika	Serbian Spruce	5'–6' ht.	B&B	PLANT AS SHOWN
PIST	0	Pinus strobus	Eastern White Pine	5'–6' ht.	B&B	PLANT AS SHOWN
SHRUBS						
ARAR	0	Aronia arbutifolia 'Brilliantissima'	Brilliant Red Chokeberry	No. 3	CONT.	6' O.C.
COSE	0	Cornus sericea	Redosier Dogwood	No. 3	CONT.	6' O.C.
JCPC	0	Juniperus chinensis 'Pfitzeriana Compacta'	Compact Pfitzer Juniper	No. 3	CONT.	3' O.C.
MYPE	0	Myrica pensylvanica	Northern Bayberry	No. 3	CONT.	6' O.C.
POSW	0	Physocarpus opulifolius 'Summer Wine'	Summer Wine Ninebark	No. 5	CONT.	6' O.C.
RPJM	0	Rhododendron 'PJM Compactum'	Compact PJM Rhododendron	No. 3	CONT.	3' O.C.
VACO	0	Vaccinium corymbosum	High Bush Blueberry	No. 3	CONT.	6' O.C.
VOAM	0	Viburnum opulus var. americanum	American Cranberrybush	No. 3	CONT.	6' O.C.
PERENNIALS						
HESD	0	Hemerocallis 'Stella D'Oro'	Stella D'Oro Daylily	No. 1	CONT.	2' O.C.
ORNAMENTAL GRASSES						
CAKF	0	Calamagrostis acutiflora 'Karl Foerster'	Karl Foerster Feather Reed Grass	No. 2	CONT.	3' O.C.

PROPERTY OWNER:
FOUR WOODS LLC
C/O JOHN J WOODCOCK III
89 SADDLEBACK DRIVE
SOUTH WINDSOR, CT 06074
APPLICANT:
SCANNELL PROPERTIES #644, LLC
294 GROVE LANE EAST
SUITE 140
WAYZATA, MN 55391
(763) 331-8851

REFERENCES:
THIS PLAN REFERS TO THE FOLLOWING:
1. PLAN ENTITLED "PROPERTY & TOPOGRAPHIC SURVEY, 67 KENNEDY ROAD & 352 SULLIVAN AVENUE, SOUTH WINDSOR, CONNECTICUT" DATED 9/20/2021, PREPARED BY DESIGN PROFESSIONALS, INC.

LANDSCAPE PLAN NOTES:
1. "CALL BEFORE YOU DIG" – CONTRACTOR SHALL NOTIFY UTILITY COMPANIES OF PENDING EXCAVATION AT OR NEAR PUBLIC UTILITIES. CALL 811 AT LEAST 72 HOURS PRIOR TO BEGINNING EXCAVATION.
2. THIS PLAN SHALL BE USED FOR LANDSCAPING ONLY
3. REFER TO NOTES SHEET FOR LANDSCAPING AND SEEDING NOTES

21 FERNCY DRIVE
P.O. BOX 1176
SOUTH WINDSOR, CT 06074
860-291-8755 – T
860-291-8757 – F
www.designprofessionals.com
design professionals
CIVIL & TRAFFIC ENGINEERS / LAND SURVEYORS
PLANNERS / LANDSCAPE ARCHITECTS

Copyright © 2022 Design Professionals, Inc. – All Rights Reserved
1. This plan is valid only if bears the seal or stamp and original signature of the Professional Engineer, Land Surveyor or Landscape Architect.
2. Reproduction techniques used in the production of this plan can stretch or shrink the paper. Scaling of this plan may not be accurate. Contact DPI if additional information is required.
3. This plan and other plans prepared by Design Professionals, Inc. are instruments of service and shall remain the property of the use of those items by DPI is prohibited. Reproduction of these items is prohibited without the express written consent of DPI. Additional use of these items is prohibited and may be subject to a fee.

PREPARED FOR:
Scannell Properties #644, LLC
294 Grove Lane East
Suite 140
Wayzata, MN 55391
763-331-8851 T

PROJECT NO. 4670
DATE: 3/30/2022
DESIGNED BY: CMJ/BPW
DRAWN BY: CMJ/BPW
CHECKED BY: BPW

67 KENNEDY ROAD
WAREHOUSE & DISTRIBUTION CENTER
352 SULLIVAN AVENUE, 67 & 68 KENNEDY ROAD
SOUTH WINDSOR, CONNECTICUT 06074
GIS NOs: 87300352, 49800067, & 49800068

REVISIONS

NO.	DATE		BY

LANDSCAPE PLAN

SCALE: 1" = 40'
0 20' 40' 80'

SHEET
C-LS1
SHEET 14 OF 24

File: C:\jobs\4670\Engineering\AutoCAD\4670_LS-LT Plan.dwg Layout: 14 C-LS1 Plotted: 3/30/2022 12:04 PM Last Saved 3/30/2022 9:36 AM Last Saved By: benwheeler

WETLAND RESTORATION PLANTING SCHEDULE

QTY	BOTANICAL NAME	COMMON NAME	SIZE	NOTES
DECIDUOUS TREES				
35	Acer rubrum	Red Maple	4'–6' ht.	10' O.C.
35	Nyssa sylvatica	Black Gum	4'–6' ht.	10' O.C.
35	Quercus palustris	Pin Oak	4'–6' ht.	10' O.C.
SHRUBS				
25	Cornus amomum	Silky Dogwood	3'–4' sp.	5' O.C.
25	Ilex verticillata	Winterberry	3'–4' sp.	5' O.C. (1 MALE PER GROUPING)
25	Viburnum dentatum	Northern Arrowwood	3'–4' sp.	5' O.C.

WETLAND CREATION PLANTING SCHEDULE

QTY	BOTANICAL NAME	COMMON NAME	SIZE	NOTES
DECIDUOUS TREES				
100	Acer rubrum	Red Maple	4'–6' ht.	10' O.C.
100	Nyssa sylvatica	Black Gum	4'–6' ht.	10' O.C.
100	Quercus palustris	Pin Oak	4'–6' ht.	10' O.C.
SHRUBS				
50	Cornus amomum	Silky Dogwood	3'–4' sp.	5' O.C.
50	Ilex verticillata	Winterberry	3'–4' sp.	5' O.C. (1 MALE PER GROUPING)
50	Viburnum dentatum	Northern Arrowwood	3'–4' sp.	5' O.C.

WETLAND RESTORATION/CREATION NOTES:

1. ALL CONSTRUCTION EQUIPMENT UTILIZED IN THIS AREA SHALL MINIMIZE COMPACTION AS MUCH AS POSSIBLE.
2. EXCAVATE AREA TO A DEPTH 12" BELOW FINISH GRADE WITH TOPSOIL STOCKPILED BEYOND THE LIMITS OF WETLANDS.
3. "MECHANICALLY" MIX TOPSOIL WITH A MINIMUM 30% ORGANIC CONTENT OUTSIDE OF THE WETLANDS CREATION AREA. USE TOPSOIL FROM WETLANDS TO BE DISTURBED.
4. PLACE TOPSOIL/ORGANIC SOIL MIXTURE IN WETLAND CREATION AREA TO A MINIMUM DEPTH OF 12". NO FERTILIZER OR LIME SHALL BE APPLIED.
5. PLANTS TO BE PLACED IN FIELD WITH SPACING AS SPECIFIED. EVENLY DISTRIBUTE ALL SPECIES THROUGHOUT ENTIRE PLANTING AREA.
6. PLACE AND DISTRIBUTE PLANTS TO SIMULATE NATURAL ECOLOGICAL COMMUNITIES.
7. UNDERSOW WITH:
   OBL WETLAND MIX (ERNMX-131)
   BY Ernst Conservation Seeds, 9006 Mercer Pike, Meadville, PA 16335 (800) 873-3321
   APPLICATION RATE: 0.50 LBS PER 1,000 S.F., 20 LBS PER ACRE
8. COVER WITH WEED-FREE STRAW MULCH OR APPROVED EQUIVALENT.
9. PLANT, COVER, AND MAINTAIN PER MANUFACTURER'S WRITTEN INSTRUCTIONS.

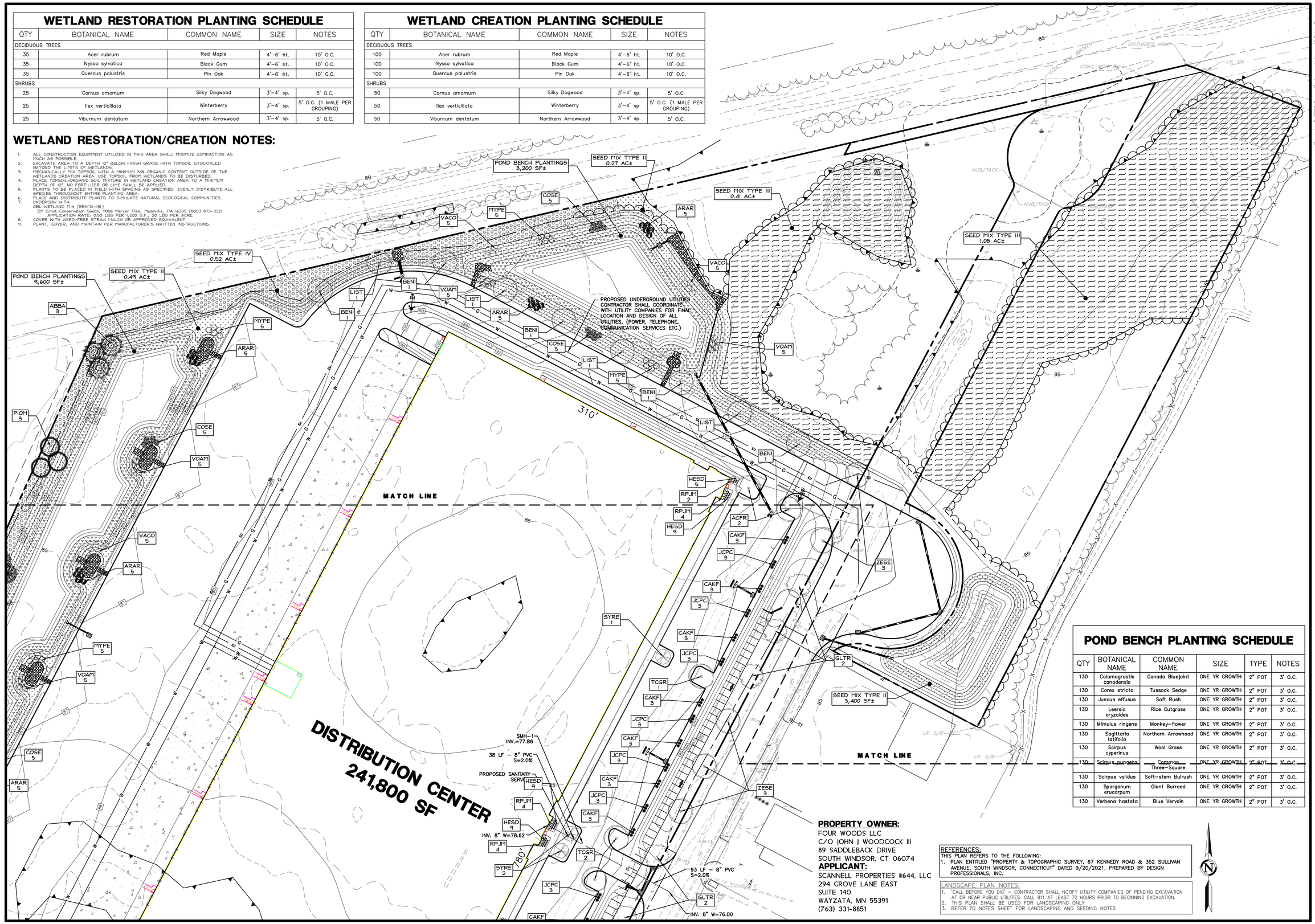

POND BENCH PLANTING SCHEDULE

QTY	BOTANICAL NAME	COMMON NAME	SIZE	TYPE	NOTES
130	Calamagrostis canadensis	Canada Bluejoint	ONE YR GROWTH	2" POT	3' O.C.
130	Carex stricta	Tussock Sedge	ONE YR GROWTH	2" POT	3' O.C.
130	Juncus effusus	Soft Rush	ONE YR GROWTH	2" POT	3' O.C.
130	Leersia oryzoides	Rice Cutgrass	ONE YR GROWTH	2" POT	3' O.C.
130	Mimulus ringens	Monkey–flower	ONE YR GROWTH	2" POT	3' O.C.
130	Sagittaria latifolia	Northern Arrowhead	ONE YR GROWTH	2" POT	3' O.C.
130	Scirpus cyperinus	Wool Grass	ONE YR GROWTH	2" POT	3' O.C.
130	Scirpus pungens	Common Three–Square	ONE YR GROWTH	2" POT	3' O.C.
130	Scirpus validus	Soft–stem Bulrush	ONE YR GROWTH	2" POT	3' O.C.
130	Sparganum erucarpum	Giant Burreed	ONE YR GROWTH	2" POT	3' O.C.
130	Verbena hastata	Blue Vervain	ONE YR GROWTH	2" POT	3' O.C.

PROPERTY OWNER:
FOUR WOODS LLC
C/O JOHN J WOODCOCK III
89 SADDLEBACK DRIVE
SOUTH WINDSOR, CT 06074

APPLICANT:
SCANNELL PROPERTIES #644, LLC
294 GROVE LANE EAST
SUITE 140
WAYZATA, MN 55391
(763) 331-8851

REFERENCES:
THIS PLAN REFERS TO THE FOLLOWING:
1. PLAN ENTITLED "PROPERTY & TOPOGRAPHIC SURVEY, 67 KENNEDY ROAD & 352 SULLIVAN AVENUE, SOUTH WINDSOR, CONNECTICUT" DATED 9/20/2021, PREPARED BY DESIGN PROFESSIONALS, INC.

LANDSCAPE PLAN NOTES:
1. "CALL BEFORE YOU DIG" – CONTRACTOR SHALL NOTIFY UTILITY COMPANIES OF PENDING EXCAVATION AT OR NEAR PUBLIC UTILITIES. CALL 811 AT LEAST 72 HOURS PRIOR TO BEGINNING EXCAVATION.
2. THIS PLAN SHALL BE USED FOR LANDSCAPING ONLY.
3. REFER TO NOTES SHEET FOR LANDSCAPING AND SEEDING NOTES

Copyright © 2022 Design Professionals, Inc. – All Rights Reserved

21 FRESH DRIVE
SUITE 100
SOUTH WINDSOR, CT 06074
860-291-8757 – T
860-291-8758 – F
www.designprofessionals.com
design professionals
CIVIL & TRAFFIC ENGINEERS / LAND SURVEYORS
PLANNERS / LANDSCAPE ARCHITECTS

* The plans, maps, and other data prepared by Design Professionals, Inc. are instruments of service and shall remain its property. The use of these items by DPI's client and others is subject to the terms and conditions of the parties' agreement, and DPI's additional use of these items is governed by the applicable state statutes.
* Reproduction techniques used in the production of the plan can stretch or shrink the paper. Scaling of the drawing is not recommended. Contact DPI if additional information is required.

PREPARED FOR:
Scannell Properties #644, LLC
294 Grove Lane East
Suite 140
Wayzata, MN 55391
763-331-8851 T

PROJECT NO. 4670
DATE: 3/30/2022
DRAWN BY: CMJ/BPW
CHECKED BY: BPW

67 KENNEDY ROAD WAREHOUSE & DISTRIBUTION CENTER
352 SULLIVAN AVENUE, 67 & 68 KENNEDY ROAD
SOUTH WINDSOR, CONNECTICUT 06074
GIS NOs: 87300352, 49800067, & 49800068

REVISIONS

NO.	DATE		BY

LANDSCAPE PLAN

SCALE: 1" = 40'
0 20' 40' 80'

SHEET
C-LS2
SHEET 15 OF 24

File: C:\jobs\4670\Engineering\AutoCAD\4670 LS-LT Pending Layout: 15 C-LS2 Plotted 3/30/2022 12:04 PM Last Saved 3/30/2022 9:36 AM Last Saved By: berwheeler

LANDSCAPE NOTES:

1. ALL EXISTING TREES TO REMAIN SHALL BE SHAPED OR PRUNED WITHIN THE DEVELOPMENT AND ALONG THE PERIMETER OF CONSTRUCTION LIMIT UNDER THE DIRECTION OF A LICENSED ARBORIST.
2. DEBRIS AND DEAD, UNHEALTHY EXISTING TREES AND INVASIVE SPECIES SHALL BE REMOVED FROM WETLANDS AND RESIDENTIAL LANDSCAPE BUFFER AREAS.
3. ALL AREAS DESIGNATED TO BE SEEDED SHALL RECEIVE FOUR (4) INCHES OF TOPSOIL, SOIL AMENDMENTS AND MULCH. WATER AND MAINTAIN LAWN AREAS UNTIL ALL AREAS ARE STABILIZED AND ACCEPTED BY OWNER'S REPRESENTATIVE.
4. PLANTS: ALL PLANTS SHALL COMPLY WITH THE RECOMMENDATIONS AND REQUIREMENTS OF ANSI Z60.1 "AMERICAN STANDARD OF NURSERY STOCK." PROVIDE PLANTS TYPICAL OF THEIR SPECIES OR VARIETY WITH NORMAL, DENSELY-DEVELOPED BRANCHES AND VIGOROUS, FIBROUS ROOT SYSTEMS. PROVIDE ONLY SOUND, HEALTHY, VIGOROUS PLANTS FREE FROM INSECT PESTS, DISEASES, AND PHYSICAL INJURY. ALL PLANTS SHALL HAVE A FULLY DEVELOPED FORM WITHOUT VOIDS AND OPEN SPACES.
5. BALLED AND BURLAPPED PLANTS: DIG BALLED AND BURLAPPED PLANTS WITH FIRM, NATURAL BALLS OF EARTH OF SUFFICIENT DIAMETER AND DEPTH TO ENCOMPASS THE FIBROUS AND FEEDING ROOT SYSTEM NECESSARY FOR FULL RECOVERY OF PLANT, PROVIDE BALL SIZES CONFORMING WITH THE LATEST EDITION OF THE "AMERICAN STANDARD FOR NURSERY STOCK". CRACKED OR MUSHROOMED BALLS ARE NOT ACCEPTABLE.
   5.A. BARE-ROOT PLANTS: DIG WITH ADEQUATE FIBROUS ROOTS, COVERED WITH A UNIFORMLY THICK COATING OF MUD BY BEING PUDDLED IMMEDIATELY AFTER THEY ARE DUG, OR PACKED IN MOIST STRAW OR PEAT MOSS.
   5.B. CONTAINER-GROWTH STOCK: GROWN IN A CONTAINER FOR SUFFICIENT LENGTH OF TIME FOR THE ROOT SYSTEM TO HAVE DEVELOPED TO HOLD ITS SOIL TOGETHER, FIRM AND WHOLE.
   5.B.A. CONTAINER STOCK SHALL NOT BE POT BOUND.
   5.B.B. CONTAINER STOCK SHALL NOT BE LOOSE IN THE CONTAINER.
   5.C. ALL PLANTS SHALL BE NURSERY GROWN UNDER CLIMATIC CONDITIONS SIMILAR TO THOSE IN THE LOCALITY OF THE PROJECT, FOR AT LEAST ONE YEAR.
6. CONTRACTOR RESPONSIBLE TO WARRANT PLANT MATERIAL TO REMAIN ALIVE AND BE HEALTHY, VIGOROUS CONDITION FOR A PERIOD OF 1 YEAR AFTER FINAL ACCEPTANCE OF ENTIRE PROJECT INCLUDING DEATH AND UNSATISFACTORY GROWTH, EXCEPT FOR DEFECTS RESULTING FROM NEGLECT BY OWNER, ABUSE OR DAMAGE BY OTHERS, OR UNUSUAL PHENOMENA OR INCIDENTS WHICH ARE BEYOND CONTRACTOR'S CONTROL.
7. CONTRACTOR TO REMOVE AND REPLACE TREES, SHRUBS, OR OTHER PLANTS FOUND TO BE DEAD OR IN UNHEALTHY CONDITION DURING WARRANTY PERIOD AT CONTRACTOR'S EXPENSE. REPLACE TREES AND SHRUBS WHICH ARE IN DOUBTFUL CONDITION AT END OF WARRANTY PERIOD, AND EXTEND WARRANTY PERIOD FOR AN ADDITIONAL GROWING SEASON FOR THE REPLACEMENT PLANTS.
8. CONTRACTOR RESPONSIBLE FOR PLANTING UNDER FAVORABLE WEATHER CONDITIONS AND RECOMMENDED SEASON FOR PLANT SURVIVAL AND ESTABLISHMENT. AT OPTION OF, AND UNDER FULL RESPONSIBILITY OF CONTRACTOR, PLANTING OPERATIONS MAY BE CONDUCTED UNDER UNSEASONABLE CONDITIONS, BUT WITHOUT ADDITIONAL COMPENSATION. IF SPECIAL CONDITIONS EXIST TO REQUIRE PLANTING OUTSIDE THE ABOVE SPECIFIED DATES, THE CONTRACTOR SHALL SUBMIT IN WRITING FOR PERMISSION BY THE OWNER'S REPRESENTATIVE. ANY VARIANCE IN THE PLANTING SEASON WILL NOT AFFECT THE ONE YEAR PLANTING GUARANTEE PERIOD.
9. DO NOT MAKE SUBSTITUTIONS. IF SPECIFIED LANDSCAPE MATERIAL IS NOT OBTAINABLE, SUBMIT PROOF OF NON-AVAILABILITY TO OWNER TOGETHER WITH PROPOSAL FOR USE OF EQUIVALENT MATERIAL. SUBSTITUTION OF PLANTS WILL NOT BE PERMITTED UNLESS APPROVED IN WRITING BY THE OWNER.
   9.A. ROOT TYPES MAY BE FREELY SUBSTITUTED IN THE CASE OF BALLED AND BURLAPPED, OR CONTAINER GROWN. ALL OTHER SPECIFICATIONS REMAINING UNCHANGED. BARE ROOT OR COLLECTED PLANTS ARE NOT ACCEPTABLE AS SUBSTITUTES WITHOUT WRITTEN RECEIPT OF A CHANGE ORDER.
10. PROVIDE A MINIMUM OF 12" OF PLANTING SOIL MIXTURE IN ALL PLANTING BEDS.
11. PLANTING SOIL MIXTURE (BY VOLUME) SHALL BE EQUAL TO:
   A. BARK MULCH/COMPOST 10%-12%
   B. COARSE SAND 40-45%
   C. TOPSOIL 45-50%
12. PRIOR TO PLANTING, THE CONTRACTOR SHALL OBTAIN SOIL TEST FROM A CERTIFIED SOIL LABORATORY FOR ALL AREAS OF THE SITE WITH RECOMMENDATIONS FOR APPROPRIATE SOIL AMENDMENTS FOR THE TYPES OF PLANTS SPECIFIED.
   12.A. LIME SHALL BE PELLETIZED LIME MANUFACTURED TO MEET AGRICULTURAL STANDARDS AND CONTAIN A MAXIMUM OF 40% OXIDE, (I.E., CALCIUM OXIDE PLUS MAGNESIUM OXIDE).
   12.B. FERTILIZER SHALL BE OF A FORMULA INDICATED BY THE SOIL TESTING TO ACHIEVE A MINIMUM OF ONE POUND OF NITROGEN PER 1000 S.F. OF LAWN AREA. FERTILIZER SHALL BE A MINIMUM OF 50% ORGANIC SLOW-RELEASE COMPOSITION.
   12.C. NO SOIL AMENDMENTS OR FERTILIZER SHALL BE USED FOR AREA DISTURBED WITHIN WETLANDS OR CREATED WATER QUALITY BASINS.
   12.D. CONTRACTOR TO HAVE FERTILIZER MATERIALS DELIVERED IN ORIGINAL, UNOPENED, AND UNDAMAGED CONTAINERS SHOWING WEIGHT, ANALYSIS, AND NAME OF MANUFACTURER. STORE IN MANNER TO PREVENT WETTING AND DETERIORATION.
   12.E. DELAY MIXING FERTILIZER IF PLANTING WILL NOT FOLLOW PLACING OF PLANTING SOIL WITHIN A FEW DAYS.
13. DAYLILIES AND PERENNIALS SHALL BE INSTALLED AT 24" O.C., UNLESS NOTED OTHERWISE. APPLY 2" OF BARK MULCH IN AREAS OF GROUND COVER AND PERENNIALS OR OWNER SELECTED ANNUALS.
14. NO PLANT, EXCEPT GROUND COVERS, GRASSES, OR VINES, SHALL BE PLANTED LESS THAN TWO FEET FROM STRUCTURES, EDGE OF PAVEMENT, OR BACK OF CURB.
15. TREES IN EXCESS OF 3" CALIPER SHALL BE SUBJECT TO INSPECTION FOR CONFORMITY TO THE SPECIFICATIONS AND APPROVAL OF LANDSCAPE ARCHITECT AT THEIR PLACE OF GROWTH AND UPON DELIVERY. WRITTEN REQUEST SHALL BE SUBMITTED 30 DAYS PRIOR.
16. CONTRACTOR RESPONSIBLE TO SUBMIT CERTIFICATES OF INSPECTION AS REQUIRED BY GOVERNMENTAL AUTHORITIES. LANDSCAPE MATERIALS TO BE SHIPPED WITH CERTIFICATES OF INSPECTION REQUIRED BY GOVERNMENTAL AUTHORITIES. COMPLY WITH REGULATIONS APPLICABLE TO LANDSCAPE MATERIALS AND CONTRACTOR TO SUBMIT MANUFACTURER'S OR VENDOR'S CERTIFIED ANALYSIS FOR FERTILIZER MATERIALS.
17. MOVING AND STORAGE OF PLANT MATERIALS: CONTRACTOR TO TAKE ALL PRECAUTIONS CUSTOMARY IN GOOD TRADE PRACTICE IN PREPARING PLANTS FOR MOVING. WORKMANSHIP THAT FAILS TO MEET THE HIGHEST STANDARDS WILL BE REJECTED.
   17.A. SPRAY DECIDUOUS PLANTS IN FOLIAGE WITH AN APPROVED ANTITRANSPIRANT IMMEDIATELY AFTER DIGGING TO PREVENT DEHYDRATION.
   17.B. LEGIBLY TAG PLANTS WITH BOTANICAL NAME AND SIZE IN ACCORDANCE WITH THE STANDARDS OF PRACTICE OF THE AMERICAN ASSOCIATION OF NURSERYMEN.
   17.C. DIG, PACK, TRANSPORT, AND HANDLE PLANTS WITH CARE TO ENSURE PROTECTION AGAINST INJURY. FULLY PROTECT PLANTS FROM DAMAGE BY SUN, WIND, DROUGHT, WATER AND OTHER INJURIOUS CONDITIONS DURING TRANSPORTATION TO SITE AND DURING TEMPORARY STORAGE BEFORE PLANTING.
   17.D. INSPECTION CERTIFICATES REQUIRED BY LAW SHALL ACCOMPANY EACH SHIPMENT INVOICE OR ORDER TO STOCK AND ON ARRIVAL. THE CERTIFICATE SHALL BE FILED WITH THE OWNER.
   17.E. NO PLANT SHALL BE BOUND WITH ROPE OR WIRE IN A MANNER THAT COULD DAMAGE OR BREAK THE BRANCHES.
   18. A COMPLETE LIST OF PLANTS, INCLUDING A SCHEDULE OF SIZES, QUANTITIES, AND OTHER REQUIREMENTS IS SHOWN ON THE DRAWINGS. IN THE EVENT THAT QUANTITY DISCREPANCIES OR MATERIAL OMISSIONS OCCUR IN THE PLANT MATERIALS LIST, THE PLANTING PLANS SHALL GOVERN.
   19. STOCK FURNISHED SHALL BE AT LEAST THE MINIMUM SIZE INDICATED ON THE DRAWINGS. LARGER STOCK IS ACCEPTABLE, AT NO ADDITIONAL COST AND PROVIDING THE LARGER PLANTS WILL NOT BE CUT BACK TO THE SIZE INDICATED ON THE DRAWINGS.
   20. THE HEIGHT OF THE TREE, MEASURED FROM THE CROWN OF THE ROOTS TO THE AVERAGE HEIGHT OF THE TOP OF THE TREE, SHALL NOT BE LESS THAN THE MINIMUM SIZE DESIGNATED IN THE PLANT LIST.
   21. SHRUBS AND SMALL PLANTS SHALL MEET THE REQUIREMENTS FOR SPREAD AS INDICATED IN THE PLANT LIST.
   22. NO PRUNING WOUNDS SHALL BE PRESENT WITH A DIAMETER OF MORE THAN 1 INCH AND SUCH WOUNDS MUST SHOW VIGOROUS BARK ON ALL EDGES.
   23. ANTITRANSPIRANT. PROVIDE PROTECTIVE FILM EMULSION PROVIDING A PROTECTIVE FILM OVER PLANT SURFACES, PERMEABLE TO PERMIT TRANSPIRATION. MIXED AND APPLIED IN ACCORDANCE WITH MANUFACTURER'S INSTRUCTIONS.
   24. WATER IS TO BE SUPPLIED FOR PLANTS THAT IS CLEAN, FREE FROM TOXIC AMOUNTS OF SALT, OIL, ACID ALKALI, ORGANIC MATTER OR OTHER SUBSTANCES HARMFUL TO PLANTS.
   25. CONTRACTOR TO PRUNE AND REPAIR PLANTS AS FOLLOWS:
   25.A. REMOVE OR CUT BACK, BROKEN, DAMAGED, AND UNSYMMETRICAL GROWTH OF NEW WOOD.
   25.B. MULTIPLE LEADER PLANTS: PRESERVE THE CENTRAL LEADER WHICH WILL BEST PROMOTE THE SYMMETRY OF THE PLANT. CUT BRANCHES FLUSH AT THE BRANCH COLLAR WITH THE TRUNK OR MAIN BRANCH.
   25.C. PRUNE NEEDLE-LEAF EVERGREEN TREES ONLY TO REMOVE BROKEN OR DAMAGED BRANCHES.
   25.D. ALL TREES DIRECTLY ADJACENT TO WALKWAYS OR DRIVEWAYS SHALL BE PRUNED AND MAINTAINED TO A MINIMUM BRANCHING HEIGHT OF 7 FEET ABOVE FINISH GRADE.
   26. MULCH TO BE APPLIED AS FOLLOWS:
   26.A. AREAS TO RECEIVE MULCH ALL PLANT BEDS AND OTHER AREAS AS DESIGNATED ON DRAWINGS SHALL BE MULCHED.
   26.B. PLACEMENT: PLACE MULCH TO REQUIRED UNIFORM DEPTH SOON AFTER PLANTING TO PREVENT DRYING OF PLANTING SOIL AROUND ROOTS. DO NOT PLACE MULCH WITHIN 3" OF TREE TRUNKS.
   26.C. APPLY BARK MULCH TO A UNIFORM DEPTH OF 2 INCHES.
   26.D. MULCH SHALL BE 6 MONTHS OLD, WELL-ROTTED, SHREDDED, NATIVE HARDWOOD BARK, NOT LARGER THAN 4" IN LENGTH AND 1/2" IN WIDTH, FREE OF WOOD CHIPS AND SAWDUST.
   27. CONTRACTOR RESPONSIBLE FOR MAINTENANCE OF PLANT MATERIALS:
   27.A. MAINTAIN PLANTINGS UNTIL FINAL ACCEPTANCE OF WORK.
   27.B. MAINTENANCE SHALL INCLUDE PRUNING, WEEDING, WATERING, AND APPLICATION OF APPROPRIATE INSECTICIDES AND FUNGICIDES NECESSARY TO MAINTAIN PLANTS FREE OF INSECTS AND DISEASE.
   27.C. RESET SETTLED PLANTS TO PROPER GRADE AND POSITION. RESTORE PLANTING AND ADJACENT MATERIAL AND REMOVE DEAD MATERIAL.
   27.D. CORRECT DEFECTIVE WORK AS SOON AS POSSIBLE AFTER DEFICIENCIES BECOME APPARENT AND WEATHER AND SEASON PERMIT.
   27.E. WATER PLANTINGS IN A SATISFACTORY MANNER DURING AND IMMEDIATELY FOLLOWING PLANTING, TWICE PER WEEK, OR LESS UNDER WET CONDITIONS, UNTIL ACCEPTANCE BY OWNER. PROVIDE ADDITIONAL WATERING DURING EXCESSIVE DRY PERIODS DURING THE MAINTENANCE PERIOD AS DIRECTED BY THE OWNER.
   27.F. REPLACEMENT OF PLANTS: ANY PLANTS TO BE REPLACED PRIOR TO ACCEPTANCE OF WORK, OR UNDER TERMS OF GUARANTY SHALL BE INSTALLED FOLLOWING PROCEDURES SET FORTH FOR ORIGINAL PLANTING.
   28. LANDSCAPE CONTRACTOR TO VERIFY ALL EXISTING CONDITIONS PRIOR TO COMMENCING CONSTRUCTION.
   29. LOCATION, SUPPORT, PROTECTION AND RESTORATION OF ALL EXISTING UTILITIES AND APPURTENANCES SHALL BE THE RESPONSIBILITY OF THE LANDSCAPE CONTRACTOR.
   30. LANDSCAPE CONTRACTOR SHALL CONTACT CALL BEFORE YOU DIG 1-800-922-4455 AT LEAST TWO FULL WORKING DAYS PRIOR TO INSTALLATION.
   31. LANDSCAPE CONTRACTOR TO REMOVE AND DISPOSE OF ALL CONSTRUCTION DEBRIS FROM SITE PER GOVERNING REGULATIONS.
   32. CONSTRUCTION SITE IS TO BE IN A CLEAN, ORDERLY CONDITION AT ALL TIMES.
   33. ALL REQUIRED PERMITS ARE THE RESPONSIBILITY OF THE LANDSCAPE CONTRACTOR.
   34. LANDSCAPE CONTRACTOR SHALL PROVIDE FINE GRADING WORK FOR THIS ENTIRE PROJECT. THIS WILL INCLUDE ALL AREAS TO BE GRASSED OR LANDSCAPED. GRADING MUST PROVIDE PROPER POSITIVE DRAINAGE AWAY FROM ALL BUILDINGS AND NOT LEAVE ANY POCKETS WHERE STANDING WATER MAY COLLECT.
   34.A. TOPSOIL SHALL NOT BE SPREAD UNDER FROZEN OR MUDDY CONDITIONS.
   35. THE LOCATION OF ALL TREES AND SHRUBS SHALL BE STAKED FOR APPROVAL BY THE OWNER'S REPRESENTATIVE PRIOR TO INSTALLATION.

SEEDING NOTES:

1. SEEDING MIXTURE TYPE I (LAWN AREAS):
   BLUEGRASS BLEND (3 VARIETIES) 50% OF MIXTURE
   CHEWINGS RED FESCUE 30% OF MIXTURE
   PERENNIAL RYEGRASS 20% OF MIXTURE
   APPLICATION RATE: 4.50LBS. PER 1000 S.F.
2. SEEDING MIXTURE TYPE II (BASIN SLOPES)
   RETENTION BASIN WILDLIFE MIX - ERNMX-127
   BY Ernst Conservation Seeds, 9006 Mercer Pike, Meadville, PA 16335 (800) 873-3321
   APPLICATION RATE: 0.50 LBS PER 1,000 S.F., 20 LBS PER ACRE
3. SEEDING MIXTURE TYPE III (WETLAND CREATION/RESTORATION AREAS)
   OBL WETLAND MIX
   BY Ernst Conservation Seeds, 9006 Mercer Pike, Meadville, PA 16335 (800) 873-3321
   APPLICATION RATE: 0.50 LBS PER 1,000 S.F., 20 LBS PER ACRE
4. SEEDING MIXTURE TYPE IV (SWALE BOTTOM)
   PERENNIAL RYEGRASS 10% OF MIXTURE
   CREEPING RED FESCUE 10% OF MIXTURE
   ALSIKE CLOVER 5% OF MIXTURE
   RED TOP 5% OF MIXTURE
   TURF-TYPE TALL FESCUE 70% OF MIXTURE
   APPLICATION RATE: 5.00 LBS PER 1,000 S.F.
5. BASIN SIDE SLOPES SHALL HAVE A MINIMUM OF 6" OF "TRACKED" TOPSOIL UNLESS OTHERWISE NOTED.
6. SEED MIXES IN AND AROUND DETENTION BASINS SHALL BE SUBSTANTIALLY ESTABLISHED PRIOR TO DISCHARGING RUNOFF FROM THE STORMWATER SYSTEM.
7. SEEDING OF BASIN SLOPES (SEEDING MIXTURE TYPE II) SHALL BE BY HYDROSEEDING AND HYDRO-MULCHING. ADD AN ADDITIONAL 15% TO SEEDING MIXTURE WHEN HYDRO-SEEDING IS USED. HYDROMULCH SHALL BE EQUAL TO CONWED 2000 AND APPLIED AT THE RATE OF 1,400LBS. PER ACRE.
8. CONTRACTOR RESPONSIBLE FOR ESTABLISHING AND MAINTAINING SEEDED AREAS UNTIL SATISFACTORY GROWTH AS DETERMINED BY THE OWNER. REPLANT BARE AND REPAIR ERODED AREAS UNTIL END OF MAINTENANCE PERIOD.

WETLAND MITIGATION NOTES:

WETLAND MITIGATION GOALS

1) COMPENSATE FOR THE LOST WETLAND AREA BY PROVIDING A COMPREHENSIVE WETLAND MITIGATION PLAN THAT INCLUDES CREATING A NEW WETLAND AREA, RESTORING A PREVIOUSLY DEGRADED WETLAND AREA, AND PROVIDING A CONSERVATION AREA THAT ENCOMPASSES BOTH AREAS AND FORESTED UPLAND BUFFER AREAS WHICH WILL PROVIDE HIGHER FUNCTIONS AND VALUES THAN THAT PROVIDED BY THE TOW ISOLATED WETLANDS BEING IMPACTED.

2) LOCATE WETLAND MITIGATION AREAS ADJACENT TO EXISTING WETLANDS TO ENSURE WETLAND HYDROLOGY CAN BE DEVELOPED WITHIN MITIGATION AREAS AND PROVIDE ECOLOGICAL CONNECTIVITY TO EXISTING WETLAND SYSTEM LOCATED IN THE NORTHERN PORTION OF THE PROJECT SITE.

3) PLANT WETLAND MITIGATION AREAS WITH A SUFFICIENT DENSITY AND DIVERSITY OF NATIVE PLANTS. WITH A FOCUS OF CREATING A FORESTED WETLAND COVER TYPE TO COMPENSATE FOR IMPACTED FORESTED WETLANDS, PROVIDING ENHANCED FUNCTIONS AND VALUES WITH A PARTICULAR FOCUS ON ENHANCING WILDLIFE HABITAT FUNCTION.

GENERAL MITIGATION NOTES

1) THE PROJECT WETLAND SCIENTIST WITH EXPERTISE IN WETLAND CREATION, RESTORATION AND ENHANCEMENT WILL SUPERVISE ALL ELEMENTS OF THE MITIGATION PLAN.

2) PLASTIC MESH SLEEVES, TREE SHELTERS AND DEER REPELLANTS WILL BE USED AS NECESSARY TO PROTECT PLANTED TREES AND SHRUBS FROM EXCESSIVE DEER DAMAGE. PLANTS WITH EXCESSIVE DAMAGE WILL BE REPLACED.

3) A PRE-CONSTRUCTION MEETING WILL BE HELD ON SITE BETWEEN THE PROJECT WETLAND SCIENTIST AND CONTRACTOR(S) PERFORMING ALL ASPECTS OF THE WETLAND MITIGATION PLAN (E.G., WETLAND CREATION, WETLAND RESTORATION, ETC.). THE PRIMARY INTENT OF THE PRE-CONSTRUCTION MEETING IS TO DISCUSS THE GOALS OF THE MITIGATION PLAN AND IMPLEMENTATION OF REQUIRED ELEMENTS NECESSARY TO ACHIEVE THESE GOALS AND SEQUENCE OF ELEMENTS. THE TOWN OF SOUTH WINDSOR SENIOR ENVIRONMENTAL PLANNER WILL BE PROVIDED NOTICE OF THIS MEETING A MINIMUM OF 3 BUSINESS DAYS PRIOR TO THE MEETING WITH AN INVITATION TO ATTEND.

4) THE TOWN OF SOUTH WINDSOR SENIOR ENVIRONMENTAL PLANNER SHALL BE NOTIFIED A MINIMUM OF 48 HOURS IN ADVANCE OF ANY PHASE OF THE MITIGATION PROJECT.

PROPOSED WETLAND CREATION AND RESTORATION AREAS

1) THE WETLAND CREATION AND RESTORATION AREAS, COLLECTIVELY REFERRED TO AS WETLAND MITIGATION AREAS, ARE PROPOSED IN CLOSE PROXIMITY TO EXISTING WETLANDS TO THE NORTH AND WEST, WITHIN THE NORTHERN PORTION OF THE PROJECT SITE THAT IS CURRENTLY DOMINATED BY MODERATELY WELL DRAINED SANDY GLACIOFLUVIAL (OUTWASH) SOILS. THE WETLAND CREATION AND RESTORATION AREAS WILL INCLUDE FORESTED, SCRUB-SHRUB, AND EMERGENT COVER TYPES TO PROMOTE A DIVERSE VARIETY OF WETLAND HABITATS THAT WILL SUPPORT SEVERAL WETLAND FUNCTIONS AND VALUES AT PRIMARY OR SECONDARY LEVELS. CONSTRUCTION OF THE WETLAND CREATION AND RESTORATION AREAS HAS BEEN DESIGNED TO MINIMIZE EROSION, PREVENT SEDIMENT FROM ENTERING ADJACENT WETLANDS, AND TO MAXIMIZE THE ESTABLISHMENT OF PLANTED NATIVE VEGETATION. THIS OVERALL MITIGATION AREA WILL PROVIDE SIGNIFICANTLY HIGHER WETLAND FUNCTIONS AND VALUES THAN THE TWO ISOLATED WETLANDS PROPOSED TO BE IMPACTED. THIS WETLAND MITIGAITON PLAN HAS BEEN DEVELOPED UTILIZING CERTAIN ASPECTS CONTAINED WITHIN THE U.S. ARMY CORPS OF ENGINEERS NEW ENGLAND DISTRICT COMPENSATORY MITIGATION STANDARD OPERATING PROCEDURES (DECEMBER 29, 2020) AS GUIDANCE. THE WETLAND CREATION AND RESTORATION AREAS WILL BE CONSTRUCTED PER THE FOLLOWING:

2) PRIOR TO ANY EARTHWORK, A SILT FENCE AND/OR COMPOST FILTER SOCK EROSION CONTROL BARRIER WILL BE INSTALLED BETWEEN THE EXISTING WETLAND AND PROPOSED WETLAND CREATION AREA.

3) THE PROJECT WETLAND SCIENTIST SHALL BE NOTIFIED BY THE CONTRACTOR A MINIMUM OF SEVEN (7) BUSINESS DAYS PRIOR TO ANY PHASE OF THE MITIGATION PROJECT INCLUDING EXCAVATION AND GRADING, SOIL TRANSFER AND PLANTING, TO MONITOR AND OR SEE IMPLEMENTATION OF THE WETLAND CREATION PLAN.

4) THE TOWN OF SOUTH WINDSOR SENIOR ENVIRONMENTAL PLANNER SHALL BE NOTIFIED A MINIMUM OF48 HOURS PRIOR TO THE INSTALLATION OF EROSION CONTROLS AND AGAIN BEFORE THE COMMENCEMENT OF EXCAVATION WORK.

5) MATURE TREES IMMEDIATELY ADJACENT TO THE WETLAND CREATION AREA, WHICH ARE AT OR NEAR THE FINAL DESIGN ELEVATIONS OF THE AREA, WILL BE IDENTIFIED AND PRESERVED (WHERE POSSIBLE). IN ADDITION, SELECT MATURE MAST TREES WITHIN THE INTERIOR OF THE WETLAND CREATION AREA WILL BE IDENTIFIED AND PRESERVED TO RETAIN SOME EXISTING OVERSTORY FOREST COVER.

6) LARGER DBH RED MAPLE TREES WITHIN THE TWO IMPACTED ISOLATED WETLANDS WILL BE SELECTED FOR REUSE IN THE WETLAND CREATION AND RESTORATION AREAS AS RED MAPLES ARE ADEPT AT RESPROUTING. SELECTED RED MAPLE TREES WILL BE CUT WITH A 4-6 FOOT STUMP RETAINED AND EXCAVATED TO INCLUDE SOME OF THE ROOT BALL. RED MAPLE STUMPS WILL BE "PLANTED" WITHIN THE WETLAND CREATION AND RESTORATION AREAS.

7) WETLAND TOPSOIL FROM THE TWO IMPACTED ISOLATED WETLANDS WILL BE REMOVED, SEGREGATED, AND STOCKPILED IN THE WETLAND MITIGATION STAGING AREA FOR USE IN THE WETLAND CREATION AREA. STOCKPILED WETLAND TOPSOIL SHALL NOT BE SCREENED SO IT RETAINS ROOT MATERIAL AND WILL SERVE AS SEED STOCK OF NATIVE WETLAND PLANT SPECIES THAT WILL AID IN NATURALLY ATTENUATING THE WETLAND CREATION AREA WITH NATIVE VEGETATION.

8) AS THE WETLAND CREATION AREA CONSISTS OF NATIVE MODERATELY WELL DRAINED SANDY GLACIOFLUVIAL SOILS WITH A SEASONAL HIGH GROUNDWATER TABLE, EXCAVATION WILL CONSIST OF FIRST REMOVAL AND SEGRETATION OF TOPSOIL. THE EXCAVATED TOPSOIL SHALL BE RETAINED FOR REUSE IN THE WETLAND CREATION AREA FOLLOWING ORGANIC MATTER AMENDMENTS, AS NECESSARY, TO REPLICATE WETLAND TOPSOIL. APPROXIMATELY 1 TO 2 FEET OF SANDY SUBSOIL WILL BE REMOVED IN ORDER TO INTERCEPT THE LOCAL SEASONAL HIGH GROUNDWATER TABLE AND CREATE VARING LEVELS OF WETLAND HYDROLOGY: SEASONAL SOIL SATURATION WITHIN 12 INCHES OF THE FINAL WETLAND SOIL SURFACE GRADE. MODIFICATIONS TO THIS GRADING PLAN MAY BE MADE IN THE FIELD AT THE DIRECTION OF THE PROJECT WETLAND SCIENTIST IN RESPONSE TO ACTUAL SUBSURFACE SOIL AND HYDROLOGIC CONDITIONS. THE PROJECT WETLAND SCIENTIST WILL INSPECT THE SUB-GRADE OF THE WETLAND CREATION AREA TO ENSURE THAT THE PROPER HYDROLOGY HAS BEEN ESTABLISHED PRIOR TO THE PLACEMENT OF WETLAND TOPSOIL.

9) AS THE WETLAND RESTORATION AREA CONSISTS OF FILL MATERIAL OVERLYING ORIGINAL WETLAND SOILS, EXCAVATION WILL CONSIST OF REMOVAL OF FILL MATERIAL UNTIL THE UNDERLYING NATIVE WETLAND SOIL IS EXPOSED. MINOR MODIFICATIONS TO THIS GRADING PLAN MAY BE MADE IN THE FIELD BY THE PROJECT WETLAND SCIENTIST IN RESPONSE TO ACTUAL SUBSURFACE SOIL AND HYDROLOGIC CONDITIONS. THE PROJECT WETLAND SCIENTIST WILL INSPECT THE SUB-GRADE OF THE WETLAND CREATION AREA TO ENSURE THAT THE PROPER HYDROLOGY HAS BEEN ESTABLISHED.

10) THE WETLAND SOIL WITHIN THE WETLAND CREATION AREA SHALL BE A MINIMUM OF TWELVE INCHES DEEP. WETLAND TOPSOIL WILL BE ADDED AS NEEDED TO MEET THESE CONDITIONS. ADDED WETLAND SOILS SHALL CONSIST OF PREPARED WEED-FREE TOPSOIL MADE UP OF A 1:1 MIXTURE (OR EQUAL VOLUMES) OF ORGANIC AND MINERAL MATERIALS THAT CONTAINS AT LEAST 12 PERCENT ORGANIC CARBON CONTENT BY WEIGHT. CLEAN COMPOSTED LEAF MOLD OR COMMERCIALLY AVAILABLE COMPOST FREE OF WEEDS OR INVASIVE SPECIES IS THE PREFERRED AMENDMENT TO ACHIEVE THIS STANDARD, THOUGH OTHER MATERIALS MAY BE USED IF APPROVED BY THE PROJECT WETLAND SCIENTIST.

11) THESE SOILS WILL THEN BE GRADED TO ACHIEVE A SLIGHT HUMMOCKHOLLOW MICROTOPOGRAPHY, SIMILAR TO THAT OF A NATURAL WETLAND SUBSTRATE. THE CONTRACTOR SHALL ENSURE THAT PROPER SOIL COMPACTION LEVELS (LOOSE TO FRIABLE) ARE MAINTAINED. IF CORRECTION MEASURES ARE NECESSARY, THE CONTRACTOR SHALL SUBMIT METHOD(S) TO BE EMPLOYED TO THE PROJECT WETLAND SCIENTIST FOR APPROVAL.

12) THE DISTURBED UPLAND SLOPE ADJACENT TO THE MITIGATION AREAS WILL BE ROUGH GRADED TO REMOVE UNWANTED LARGE DEBRIS. SIX INCHES OF TOPSOIL WILL BE PLACED ON THE SLOPE AND SEEDED WITH A NEW ENGLAND CONSERVATION/WILDLIFE MIX (NEW ENGLAND WETLAND PLANTS, INC. [413.548.8000] OR EQUIVALENT). APPROPRIATE EROSION CONTROLS MEASURES (I.E., EROSION CONTROL BLANKET, HYDROSEEDING WITH BONDED FIBER MATRIX, STRAW MULCH, ETC.) WILL BE UTILIZED TO STABILIZE THE SLOPE UNTIL VEGETATION IS ESTABLISHED.

13) WETLAND CREATION AND RESTORATION AREAS PLANTINGS SHALL TAKE PLACE ONCE THE ABOVE LISTED TASKS HAVE BEEN COMPLETED. THE WETLAND CREATION AND RESTORATION AREAS WILL BE PLANTED WITH NATIVE TREES AND SHRUBS AS NOTED IN THE PLANTING SCHEDULE AND UNDER SOWN WITH A NATIVE NEW ENGLAND WETLAND SEED MIX (NEW ENGLAND WETLAND PLANTS, INC. [413.548.8000] OR APPROVED EQUIVALENT) AFTER THE GRADING IS COMPLETED.

14) THE PROJECT WETLAND SCIENTIST SHALL INSPECT THE PLANTING STOCK SPECIMENS FOR HEALTH, PEST, AND SUITABLE FOR USE WITHIN THE REPLICATION AREA. UNSUITABLE SPECIMENS WILL BE REJECTED AND REPLACED WITH SUITABLE SPECIMENS. ANY PLANTING SUBSTITUTIONS MUST BE APPROVED BY THE PROJECT WETLAND SCIENTIST. ALL WOODY PLANT STOCK SHALL BE CONTAINER-GROWN OR BURLAP BALLED. PLANTING WITHIN THE WETLAND MITIGATION AREAS WILL CONFORM TO THE PLANS OR WILL BE COMPLETED IN ACCORDANCE WITH DIRECTIONS PROVIDED IN THE FIELD BY THE PROJECT WETLAND SCIENTIST. ONLY PLANT MATERIALS NATIVE AND INDIGENOUS TO CONNECTICUT SHALL BE USED. INVASIVE PLANT SPECIES WILL NOT BE USED IN THE MITIGATION AREA.

15) ALL PLANT MATERIALS INSTALLED SHALL MEET OR EXCEED THE SPECIFICATIONS OF THE "AMERICAN STANDARDS FOR NURSERY STOCK SECTION 10: SEEDLING TREES AND SHRUBS" BY THE AMERICAN ASSOCIATION OF NURSERYMEN.

16) NO CULTIVARS OF NATIVE PLANTS IDENTIFIED IN THE PLANTING SCHEDULE SHALL BE USED UNLESS APPROVED BY THE PROJECT WETLAND SCIENTIST.

17) THE CONTRACTOR SHALL BE RESPONSIBLE FOR THE CAREFUL INSTALLATION, MAINTENANCE (INCLUDING WATERING), AND ESTABLISHMENT OF THE PLANT MATERIAL IN THE MITIGATION AREAS. A MAINTENANCE SCHEDULE FOR IRRIGATION AND PRUNING (AS NECESSARY) WILL BE ESTABLISHED BY THE CONTRACTOR. ALL PLANTS SHALL BE GUARANTEED BY THE CONTRACTOR TO REMAIN ALIVE AND HEALTHY FOR THE FULL TWELVE (12) MONTH PERIOD FOLLOWING THE DATE OF PLANTING.

18) ALL PLANTINGS TO BE SPACED GENERALLY AS NOTED ON THE PLANTING SCHEDULE WITH ASSISTANCE FROM THE PROJECT WETLAND SCIENTIST TO SIMULATE NATURAL GROWTH PATTERNS.

19) ROCKS AND BOULDERS UNCOVERED DURING EXCAVATION OF THE WETLAND RESTORATION AREAS MAY BE LEFT IN PLACE PROVIDED THAT THEY DO NOT SIGNIFICANTLY DECREASE THE PLANTABLE AREA OF THE MITIGATION AREAS. ROCKS AND BOULDERS WILL BE PLACED IN SUCH A WAY AS TO PROVIDE CREVICES AND CAVITIES SUITABLE FOR USE BY WILDLIFE. NO MORE THAN 5 PERCENT OF THE MITIGATION AREAS WILL BE TREATED IN THIS MANNER.

20) FALLEN LOGS, BRANCHES, STUMPS AND OTHER NATURAL DEBRIS WITHIN THE WETLAND MITIGAITON AREAS, EXCLUDING INVASIVE PLANTS, WILL BE REUSED TO PROVIDE BENEFICIAL HABITAT FEATURES FOR WILDLIFE. THIS WILL INCLUDE DOWNED AND UNCOVERED MATERIAL THAT IS ACQUIRED DURING THE PROJECT'S CLEARING ACTIVITIES AND WILL BE DISTRIBUTED TO COVER NO MORE THAN 5 PERCENT OF THE MITIGAITON AREA'S SURFACE. THE NATURAL DEBRIS CAN BE OF VARYING SIZES AND IN VARYING DEGRE

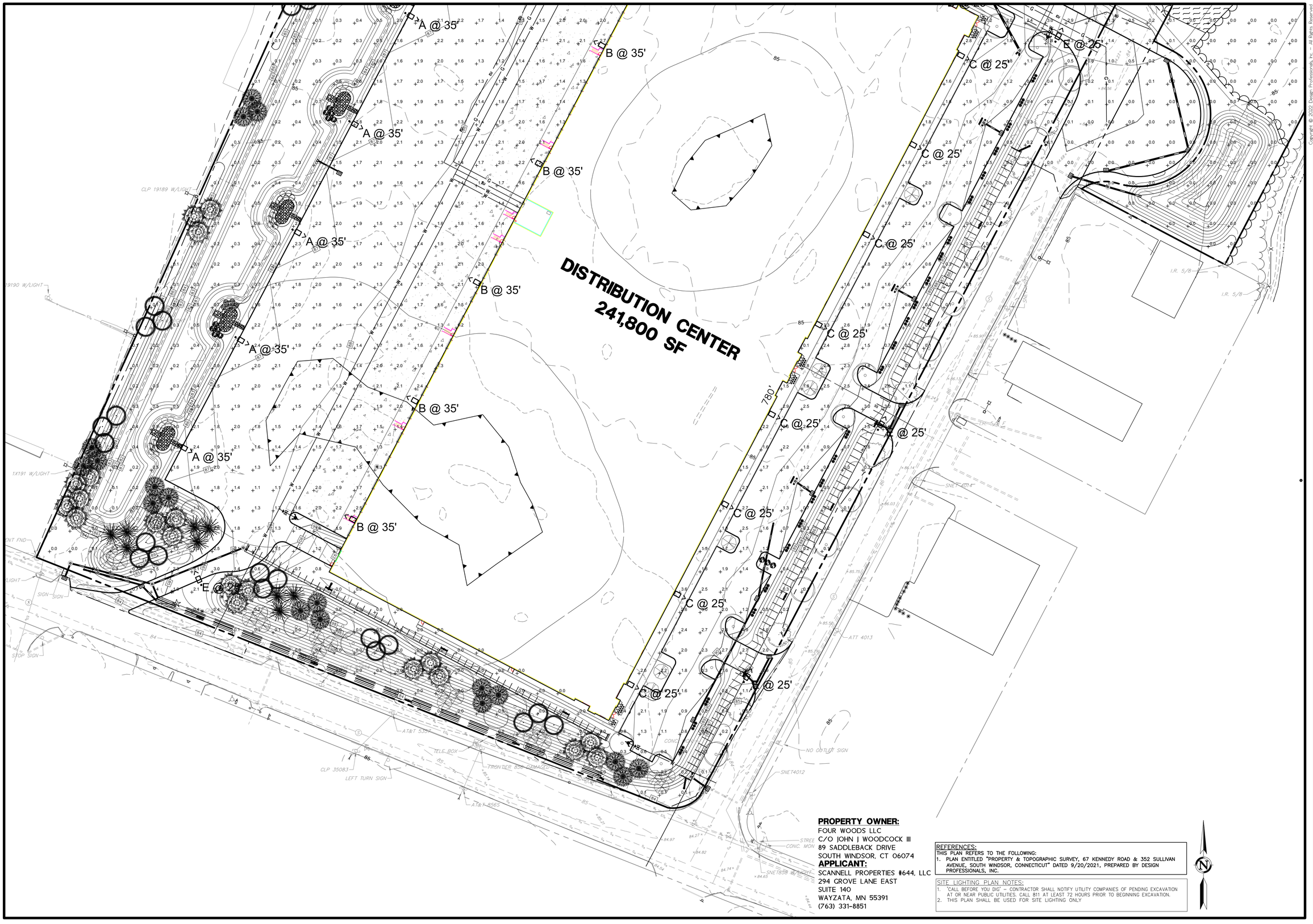

PROPERTY OWNER:
FOUR WOODS LLC
C/O JOHN J WOODCOCK III
89 SADDLEBACK DRIVE
SOUTH WINDSOR, CT 06074
APPLICANT:
SCANNELL PROPERTIES #644, LLC
294 GROVE LANE EAST
SUITE 140
WAYZATA, MN 55391
(763) 331-8851

REFERENCES:
THIS PLAN REFERS TO THE FOLLOWING:
1. PLAN ENTITLED "PROPERTY & TOPOGRAPHIC SURVEY, 67 KENNEDY ROAD & 352 SULLIVAN AVENUE, SOUTH WINDSOR, CONNECTICUT" DATED 9/20/2021, PREPARED BY DESIGN PROFESSIONALS, INC.

SITE LIGHTING PLAN NOTES:
1. "CALL BEFORE YOU DIG" – CONTRACTOR SHALL NOTIFY UTILITY COMPANIES OF PENDING EXCAVATION AT OR NEAR PUBLIC UTILITIES. CALL 811 AT LEAST 72 HOURS PRIOR TO BEGINNING EXCAVATION.
2. THIS PLAN SHALL BE USED FOR SITE LIGHTING ONLY

21 FITNEY DRIVE
P.O. BOX 1591
SOUTH WINDSOR, CT 06074
860-291-8757 – T
860-291-8758 – F
www.designprofessionals.com
design professionals
CIVIL & TRAFFIC ENGINEERS / LAND SURVEYORS
PLANNERS / LANDSCAPE ARCHITECTS

Copyright © 2022 Design Professionals, Inc. – All Rights Reserved
1. This plan is valid only if bears the seal or stamp and original signature of the Professional Engineer, Land Surveyor or Landscape Architect.
2. Reproduction techniques used in the production of this plan can shrink or stretch the paper. Scaling of this plan may not be accurate. Contact DPI if a digital version of this plan is required.
3. This plan and other plans prepared by Design Professionals, Inc. are the property of Design Professionals and shall remain its property. The use of these plans by DPI's client and others is limited to the purpose for which DPI was retained. Title to the plans remains in DPI's possession and DPI's client has a license to use the plans in accordance with the agreement between them.

PREPARED FOR:
Scannell Properties #644, LLC
294 Grove Lane East
Suite 140
Wayzata, MN 55391
763-331-8851 T

PROJECT NO. 4670
DATE 3/30/2022
DRAWN BY: CHI/BPW
DESIGNED BY: CHI/BPW
CHECKED BY: BPW

67 KENNEDY ROAD
WAREHOUSE &
DISTRIBUTION CENTER
352 SULLIVAN AVENUE, 67 & 68 KENNEDY ROAD
SOUTH WINDSOR, CONNECTICUT 06074
GIS NOs: 87300352, 49800067, & 49800068

NO.	DATE	REVISIONS	BY

SITE LIGHTING PLAN

SCALE: 1" = 40'
0 20' 40' 80'

SHEET
C-LT1
SHEET 17 OF 24

File: C:\jobs\4670\Engineering\AutoCAD\4670 LS-LT Plan.dwg Layout: 17 C-LT1 Plotted: 3/30/2022 12:03 PM Last Saved: 3/30/2022 9:36 AM Last Saved By: benwheeler

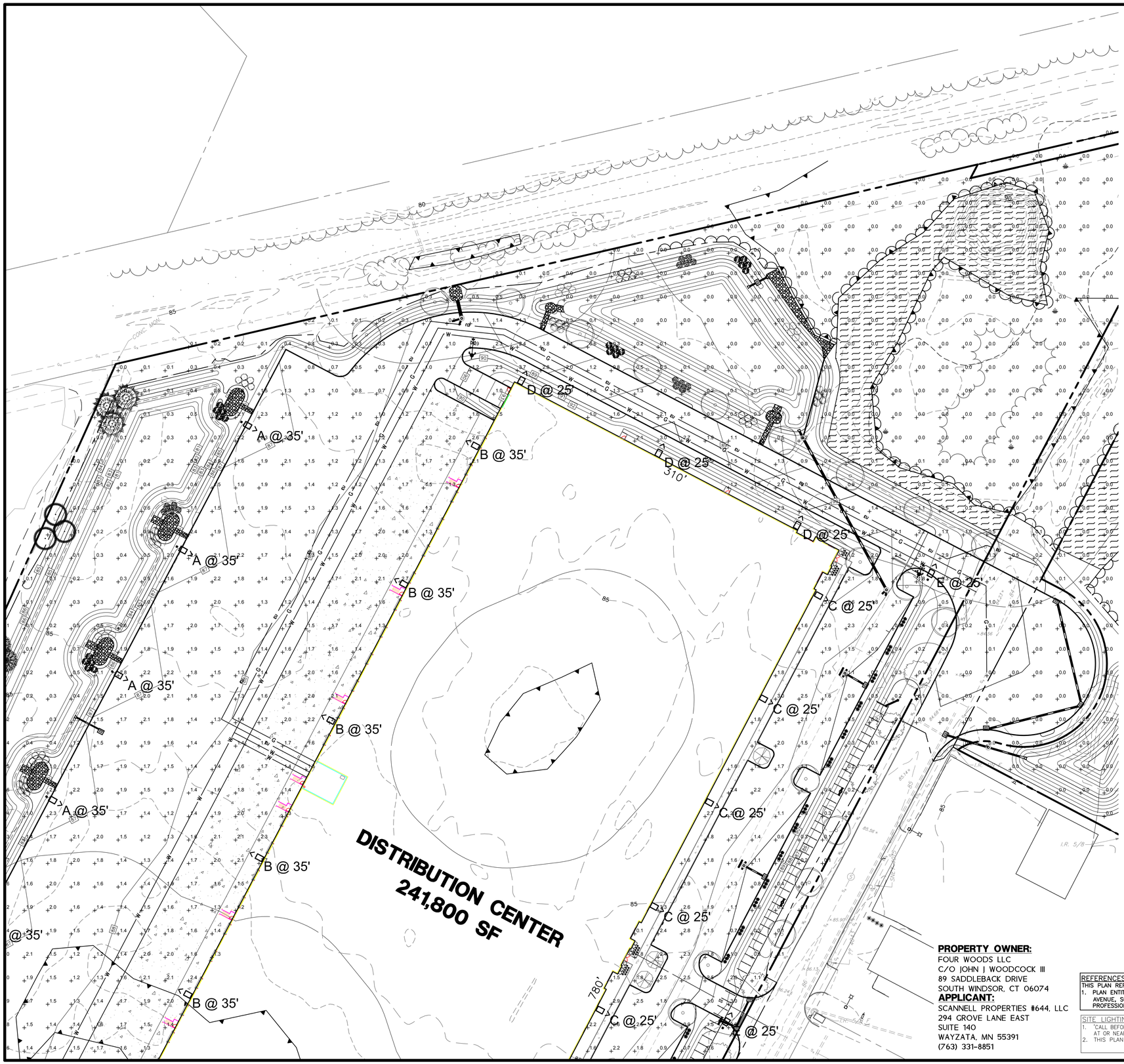

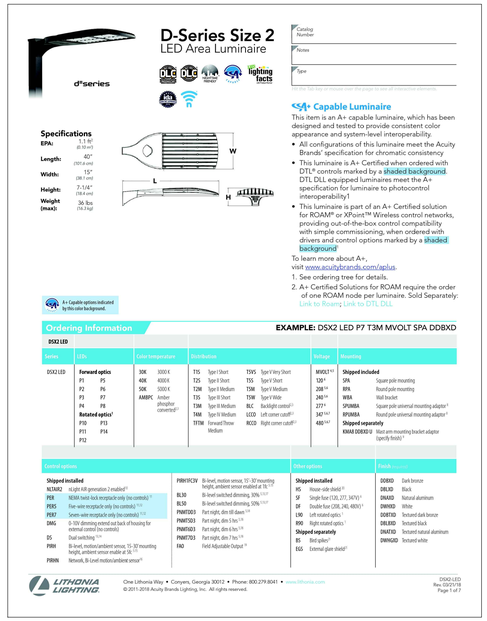

D-Series Size 2
LED Area Luminaire

Catalog Number
Notes
Type

Specifications

EPA: 1.1 ft² (0.10 m²)
Length: 40" (101.6 cm)
Width: 15" (38.1 cm)
Height: 7-1/4" (18.4 cm)
Weight (max): 36 lbs (16.3 kg)

A+ Capable Luminaire

This item is an A+ capable luminaire, which has been designed and tested to provide consistent color appearance and system-level interoperability.

- All configurations of this luminaire meet the Acuity Brands' specification for chromatic consistency
- This luminaire is A+ Certified when ordered with DTL® controls marked by a shaded background. DTL DLL equipped luminaires meet the A+ specification for luminaire to photocontrol interoperability†
- This luminaire is part of an A+ Certified solution for ROAM® or XPoint™ Wireless control networks, providing out-of-the-box control compatibility with simple commissioning, when ordered with drivers and control options marked by a shaded background.

To learn more about A+, visit www.acuitybrands.com/aplus.

1. See ordering tree for details.
2. A+ Certified Solutions for ROAM require the order of one ROAM node per luminaire. Sold Separately: Link to Roam; Link to DTL DLL

A+ Capable options indicated by this color background.

Ordering Information — **EXAMPLE:** DSX2 LED P7 T3M MVOLT SPA DDBXD

DSX2 LED

Series	LEDs	Color temperature	Distribution	Voltage[1]	Mounting
DSX2 LED	**Forward optics**: P1 P5, P2 P6, P3 P7, P4 P8, **Rotated optics**[1]: P10 P13, P11 P14, P12	30K 3000 K, 40K 4000 K, 50K 5000 K, AMBPC Amber phosphor converted[2]	T1S Type I Short, T2S Type II Short, T2M Type II Medium, T3S Type III Short, T3M Type III Medium, T4M Type IV Medium, T5FTM Forward Throw Medium, T5VS Type V Very Short, T5S Type V Short, T5M Type V Medium, T5W Type V Wide, BLC Backlight control[3], LCCO Left corner cutoff[3], RCCO Right corner cutoff[3]	MVOLT[3,4], 120[4], 208[4], 240[4], 277[4], 347[4], 480[4,6]	**Shipped included**: SPA Square pole mounting, RPA Round pole mounting, WBA Wall bracket, SPUMBA Square pole universal mounting adaptor[7], RPUMBA Round pole universal mounting adaptor[7]. **Shipped separately**: KMA8 DDBXD U Mast arm mounting bracket adaptor (specify finish)[7]

Control options		Other options	Finish
Shipped installed: NLTAIR2 nLight AIR generation 2 enabled[7], PER NEMA twist-lock receptacle only (no controls)[7], PER5 Five-wire receptacle only (no controls)[7,16], PER7 Seven-wire receptacle only (no controls)[7,16], DMG 0-10V dimming extend out back of housing for external control (no controls), DS Dual switching[7,16], PIR8 Bi-level, motion/ambient sense, 15'-30' mounting height, ambient sensor enabled at 28,[17], PIR8FC Bi-level, motion sense, 15'-30' mounting height, ambient sense enabled at 28,[17], PIR8HN Network, Bi-Level motion/ambient sense[18], PIR9FCSV Bi-level, motion sense, 15'-30' mounting height, ambient sensor enabled at 28,[17], BL30 Bi-level switched dimming, 30%[16,17], BL50 Bi-level switched dimming, 50%[16,17], PNMTD2S Part night, dim 50 dawn[16], PNMTD3S Part night, dim 3 hrs[7,16], PNMTD4S Part night, dim 4 hrs[7,16], PNMTD7S Part night, dim 7 hrs[7,16], FAO Field Adjustable Output[19]	**Shipped installed**: HS House-side shield[7], SF Single fuse (120, 277, 347V)[7], DF Double fuse (208, 240, 480V)[7], L90 Left rotated optics[7], R90 Right rotated optics[7]. **Shipped separately**: BS Bird spikes[8], EGS External glare shield[7]	DDBXD Dark bronze, DBLXD Black, DNAXD Natural aluminum, DWHXD White, DDBTXD Textured dark bronze, DBLBXD Textured black, DNATXD Textured natural aluminum, DWHGXD Textured white

LITHONIA LIGHTING. One Lithonia Way • Conyers, Georgia 30012 • Phone: 800.279.8041 • www.lithonia.com
© 2011-2018 Acuity Brands Lighting, Inc. All rights reserved.
DSX2-LED Rev. 02/07/18 Page 1 of 7

Symbol	Label	QTY	Manufacturer	Catalog Number	Description	LLF	Wattage	Notes
	A	6	Lithonia Lighting	DSX2 LED P3 40K TFTM MVOLT	DSX2 LED P3 40K TFTM MVOLT	0.91	217	Pole Mount
	B	6	Lithonia Lighting	DSX2 LED P3 40K TFTM MVOLT	DSX2 LED P3 40K TFTM MVOLT	0.91	217	Wall Mount
	C	8	Lithonia Lighting	DSX2 LED P1 40K TFTM MVOLT	DSX2 LED P1 40K TFTM MVOLT	0.91	140	Wall Mount
	D	3	Lithonia Lighting	DSX2 LED P1 40K T3M MVOLT	DSX2 LED P1 40K T3M MVOLT	0.91	140	Wall Mount
	E	4	Lithonia Lighting	DSX2 LED P1 40K T3M MVOLT	DSX2 LED P1 40K T3M MVOLT	0.91	140	Pole Mount

Statistics

Description	Symbol	Avg	Max	Min	Max/Min	Avg/Min
Calc Zone #1	+	0.7 fc	3.9 fc	0.0 fc	N/A	N/A

SITE LIGHTING NOTES:

1. THE LIGHT LEVELS SHOWN ON THESE PLANS (IN FOOTCANDLES) ARE APPROXIMATE AND BASED ON INFORMATION PROVIDED BY THE MANUFACTURER.
2. CONTRACTOR SHALL MAKE ADJUSTMENTS TO LIGHT LOCATIONS IN THE FIELD TO AVOID UNDERGROUND UTILITIES. CONTRACTOR SHALL CONTACT LANDSCAPE ARCHITECT PRIOR TO INSTALLING IF DEVIATION IS 5' OR MORE FROM LOCATION SHOWN ON THE PLANS.
3. MOUNTING HEIGHT EQUALS LUMINAIRE HEIGHT ABOVE FINISHED GRADE.
4. LIGHT POLES AND/OR BASES SHALL BE MINIMUM 3' FROM FACE OF CURB.
5. ELECTRICAL DESIGN OF SITE LIGHTING TO BE COMPLETED BY AN ELECTRICAL ENGINEER LICENSED IN THE STATE OF CONNECTICUT (BY OTHERS).
6. LIGHT POLE BASES TO BE DESIGNED BY A STRUCTURAL ENGINEER LICENSED IN THE STATE OF CONNECTICUT AND COORDINATED WITH THE LIGHTING MANUFACTURER (BY OTHERS).
7. INSTALL PER MANUFACTURER'S WRITTEN INSTRUCTIONS.

PROPERTY OWNER:
FOUR WOODS LLC
C/O JOHN J WOODCOCK III
89 SADDLEBACK DRIVE
SOUTH WINDSOR, CT 06074

APPLICANT:
SCANNELL PROPERTIES #644, LLC
294 GROVE LANE EAST
SUITE 140
WAYZATA, MN 55391
(763) 331-8851

REFERENCES:
THIS PLAN REFERS TO THE FOLLOWING:
1. PLAN ENTITLED "PROPERTY & TOPOGRAPHIC SURVEY, 67 KENNEDY ROAD & 352 SULLIVAN AVENUE, SOUTH WINDSOR, CONNECTICUT" DATED 9/20/2021, PREPARED BY DESIGN PROFESSIONALS, INC.

SITE LIGHTING PLAN NOTES:
1. 'CALL BEFORE YOU DIG' – CONTRACTOR SHALL NOTIFY UTILITY COMPANIES OF PENDING EXCAVATION AT OR NEAR PUBLIC UTILITIES. CALL 811 AT LEAST 72 HOURS PRIOR TO BEGINNING EXCAVATION.
2. THIS PLAN SHALL BE USED FOR SITE LIGHTING ONLY

21 FIDELITY DRIVE
SUITE 301
SOUTH WINDSOR, CT 06074
860-291-8755 – T
860-290-7757 – F
www.designprofessionals.com

Copyright © 2022 Design Professionals, Inc. – All Rights Reserved

design professionals
CIVIL & TRAFFIC ENGINEERS / LAND SURVEYORS
PLANNERS / LANDSCAPE ARCHITECTS

1. This plan is valid only if bearing the seal or stamp and original signature of the Professional Engineer, Land Surveyor or Landscape Architect.
2. Reproduction techniques used in the production of this plan can stretch or shrink the paper. Scale of this plan should be verified against the graphic scale.
3. Reproduction techniques used in the production of this plan can result in the loss of some information. Information is required.
4. This plan and other plans prepared by Design Professionals, Inc. are instruments of service and shall remain the property of Design Professionals, Inc. The reuse of these items by OWNER, OWNER's agents or any other party for purposes not intended by the OWNER is prohibited without the written permission of Design Professionals, Inc. and DPI's additional compensation.

PREPARED FOR:
Scannell Properties #644, LLC
294 Grove Lane East
Suite 140
Wayzata, MN 55391
763-331-8851 T

67 KENNEDY ROAD
WAREHOUSE &
DISTRIBUTION CENTER
352 SULLIVAN AVENUE, 67 & 68 KENNEDY ROAD
SOUTH WINDSOR, CONNECTICUT 06074
GIS NOs: 87300352, 49800067, & 49800068

NO.	DATE	REVISIONS	BY

PROJECT NO. 4670
DATE: 3/30/2022
DRAWN BY: CHJ/BPW
CHECKED BY: BPW

SITE LIGHTING PLAN

SCALE: 1" = 40'
0 20' 40' 80'

SHEET
C-LT2
SHEET 18 OF 24

File: C:\jobs\4670\Engineering\AutoCAD\4670 LS-LT Pending Layout: 18 C-LT2 Plotted: 3/30/2022 12:03 PM Last Saved: 3/30/2022 9:36 AM Last Saved By: berwheeler

CONSTRUCTION NOTES:

1. At least two full business days prior to starting any site activity or demolition, the contractor shall contact the applicable state utility location service by dialing 811 or submitting an online ticket request. The utilities shall be marked in all areas of proposed disturbance.

2. It is the contractor's responsibility to review all construction contract documents associated with the project scope of work, including, but not limited to, all drawings and specifications, architectural plans, boundary and topographic survey, wetlands assessment and reports, geotechnical reports, environmental reports, and approval conditions, prior to the commencement of construction. Should the contractor find conflict and/or discrepancy between the documents relative to the plans, specifications, reports, or the relative or applicable codes, regulations, laws, rules, statutes and/or ordinances, it is the contractor's sole responsibility to notify the Engineer, in writing, of said conflict and/or discrepancy prior to the start of construction.

3. The contractor shall be responsible for adhering to any conditions of approval placed on the project by the authorities having jurisdiction.

4. The contractor must comply, to the fullest extent, with the latest Occupational Health and Safety (OSHA) standards and regulations, and/or any other agency with jurisdiction for construction activities. The contractor is solely responsible for construction means, methods, techniques, sequences, or procedures, or for safety precautions and programs in connection with work on the Project. The Engineer will not be responsible for the contractor's safety, schedules, or failure to carry out its work in accordance with the contract documents. The Engineer will not have control over or charge of acts or omissions of the contractor, subcontractors, or their agents or employees, or of any persons performing portions of work on the Project.

5. Contractor must notify the Engineer in writing if there are any questions concerning the accuracy or intent of these plans or related specifications. If such notification is given, no demolition or site activity may begin until such time that the Engineer provides a written response to same.

6. Contractor shall adhere to and is responsible for compliance with all details, notes, plans and specifications contained herein. It is the responsibility of the contractor to ensure that all work performed by their subcontractors is in full compliance with these requirements.

7. The contractor shall confirm that they are in receipt of the current version of the referenced documents prior to the commencement of any work.

8. Prior to commencing work, the contractor shall review and correlate all consultants plans and specifications including the entire site plan and the latest architectural plans (including, but not limited to, structural, mechanical, electrical, plumbing, and fire suppression plans, where applicable), in particular for building utility connection locations, grease trap requirements/details, door access, and exterior grading. Contractor must immediately notify the Architect and the Engineer, in writing, of any conflicts, discrepancies or ambiguities which exist, and receive a written resolution prior to commencing construction.

9. Prior to commencing work, contractor is required to secure all necessary and/or required permits and approvals for the construction of the project, including, but not limited to, demolition work, and all off site material sources and disposal facilities. Copies of all permits and approvals shall be maintained on site throughout the duration of the project. The contractor shall thoroughly review and understand all permits and permit conditions prior to fabrication of any materials or products to be used as part of the project.

10. The contractor is responsible for independently verifying all existing onsite utilities within and adjacent to the limits of the project activities. Underground utility, structure and facility locations depicted and noted on the plans have been compiled, in part, from record mapping supplied by the respective utility companies or governmental agencies, from parol testimony, and from other sources. These locations must be considered as approximate in nature. Additionally, other such features may exist on the site, the existence of which are unknown to the Engineer.

11. The contractor is responsible for ensuring the installation of all improvements comply with all requirements of utility companies with jurisdiction and/or control of the site.

12. Locations of all existing and proposed services are approximate. Final utility service sizes and locations, including, but not limited to, the relocation and/or installation of utility poles, or the relocation and/or installation of transformers, are at the sole discretion of the respective utility companies.

13. Prior to commencement of any work, the contractor shall independently coordinate and confirm with the appropriate utility companies to finalize all utility services and/or relocations to ensure no conflict with the design plans and that proper depths can be achieved. All discrepancies must immediately be reported to the Engineer in writing. Should a conflict arise due to the final designs of the utility company, the contractor shall notify the Engineer in writing and await a written resolution prior to proceeding with further utility installations.

14. Prior to commencing construction, the contractor shall field verify all existing conditions, topographic information, utility invert elevations, and proposed layout dimensions, and must immediately notify the Engineer in writing if actual site conditions differ or are in conflict with the proposed work. No extra compensation will be paid to the contractor for work which has to be redone or repaired due to dimensions or grades shown incorrectly on these plans unless the contractor receives written permission from Owner/developer giving authorization to proceed with such additional work.

15. Where utilities are proposed to cross/traverse existing underground utilities, the elevations of the existing utilities shall be verified in the field prior to construction by excavating a test pit at the proposed utility crossing point. Should the field verified existing utility be in conflict with the proposed site designs, the contractor shall notify the Engineer in writing and shall not proceed with said utility construction until further direction is given from the Engineer.

16. At least 72 hours prior to starting any site activity or demolition, the contractor shall notify, at a minimum, the building official, municipal engineer, department of public works, planning and zoning commission, the Engineer, and local inland wetland commission, as applicable. The contractor shall also attend a pre-construction meeting with the local municipality, if required, prior to commencing any site activity or demolition.

17. Prior to starting any site activity or demolition, the contractor shall implement the soil erosion and sediment control measures as noted on the plans. Refer to the Erosion and Sedimentation Control Notes.

18. The demolition plan or existing features designated to be removed are intended to provide only general information regarding items to be demolished and/or removed. The contractor shall review all site plans (and architectural drawings as applicable) to assure that all demolition activities and incidental work necessary for the construction of the new site improvements are completed.

19. The contractor shall protect and maintain the operation and service of all active utilities and systems that are not being removed during all construction activities. Should a temporary interruption of utility services be required as part of the proposed construction activities, the contractor shall coordinate with appropriate utility companies and the affected end users to minimize impact and service interruption.

20. The contractor shall arrange for and coordinate with the appropriate utility companies for all services that require temporary or permanent termination for the project, whether shown on the site plans or not. Termination of utilities shall be performed in compliance with all local, state and/or federal regulations.

21. Contractor must prepare record drawings depicting the location of existing utilities that are capped, abandoned in place, or relocated and provide to the Owner and the Engineer of record.

22. Should hazardous material be discovered/encountered, which was not anticipated/addressed in the project plans and specifications, cease all work immediately and notify Owner and Engineer regarding the discovery of same. Do not continue work in the area until written instructions are received from an environmental professional.

23. The contractor is responsible for preventing movement, settlement, damage, or collapse of existing structures, and any other improvements that are to remain. If any existing structures that are to remain are damaged during construction, repairs shall be made using new product/materials resulting in a pre-damage condition, or better. Contractor is responsible for all repair costs. Contractor shall document all existing damage and to notify the Owner prior to the start of construction.

24. The use of explosives, if required, must comply with all local, state and federal regulations. The contractor shall obtain all permits that are required by the federal, state and local governments, and shall also responsible for all notification, inspection, monitoring or testing as may be required.

25. All debris from removal operations must be removed from the site at the time of excavation. Stockpiling of demolition debris will not be permitted. Debris shall not be burned or buried on site. All demolition materials to be disposed of, including, but not limited to, stumps, limbs, and brush, shall be done in accordance with all municipal, county, state, and federal laws and applicable codes. The contractor must maintain records of all disposal activities.

26. The contractor is responsible for repairing all damage to any existing utilities during construction, at its own expense.

27. All new utilities/services, including electric, telephone, cable tv, etc. are to be installed underground unless noted otherwise on the plans. The Contractor shall be responsible for installing all new utilities/services in accordance with the utility/service provider's written installation specifications and standards.

28. All earthwork activities must be performed in accordance with these plans and specifications and the recommendations set forth in the geotechnical report completed for this project. In the absence of a geotechnical report, all earthwork activities must comply with the standard state Department of Transportation (DOT) specifications (latest edition) and any amendments or revisions thereto. All earthwork activities must comply all applicable requirements, rules, statutes, laws, ordinances and codes for the jurisdictions where the work is being performed.

29. The contractor is responsible for removing and replacing unsuitable materials with suitable materials. All excavated or filled areas must be properly compacted. Moisture content at time of placement must be submitted in a compaction report prepared by a qualified geotechnical engineer, licensed in the state where the work is performed, verifying that all filled areas and subgrade areas within the building pad area and areas to be paved have been compacted in accordance with these plans, specifications and the recommendations. Subbase material for building pads, sidewalks, curb, or asphalt must be free of organics and other unsuitable materials. Should subbase be deemed unsuitable by Owner/developer or Owner/developer's representative, subbase is to be removed and filled with suitable material and properly compacted at the contractor's expense. All fill, compaction, and backfill materials required for utility installation must be coordinated with the applicable utility company specifications. The Engineer shall have no liability or responsibility for or as related to fill, compaction, backfill, or the balancing of earthwork.

30. Pavement must be saw cut into straight lines and must extend to the full depth of the existing pavement, except for edge of butt joints.

31. The tops of existing manholes, inlet structures, and sanitary cleanout tops must be adjusted as necessary, to match proposed grades.

32. Where retaining walls (whether or not they meet the jurisdictional definition) are identified on plans, elevations identified herein are for the exposed portion of the wall. Wall footing/foundation elevations are not identified herein and are to be set/determined by the contractor based on final structural design shop drawings prepared by an appropriate professional licensed in the state where the construction occurs.

33. Unless indicated otherwise or required by the authority having jurisdiction, all pipes shall be as follows:

    Reinforced Concrete pipe (RCP) shall meet the requirements of AASHTO M 170 Class IV with silt tight joints.

    High-Density Polyethylene pipe (HDPE) shall conform to AASHTO M 294, Type S (smooth interior with angular corrugations) with gaskets for silt tight joints.

    Polyvinyl chloride (PVC) pipe for roof drain connections shall be SDR 35 gasket pipe. Polyvinyl Chloride (PVC) pipe for sanitary sewer pipe shall be SDR 35 gasket pipe.

34. Storm sewer pipe lengths indicated are approximate and measured to the inside of inlet and/or manhole structure. Sanitary sewer pipe lengths indicated are approximate and measured to center of inlet and/or manhole structure to center of structure.

35. Stormwater roof drain locations are approximate and are based on preliminary architectural plans. Contractor is responsible for reviewing and coordinating the final architectural plans to verify final locations and sizes of all roof drains.

36. Sewers crossing streams and/or location within 10 feet of the stream embankment, or where site conditions so indicate, must be constructed of steel, reinforced concrete, ductile iron or other suitable material. Sewers conveying sanitary flow, combined sanitary and stormwater flow or industrial flow must be separated from water mains by a distance of at least 10 feet horizontally. If such lateral separations are not possible, the pipes must be in separate trenches with the sewer at least 18 inches below the bottom of the water main, or such other separation as approved by the agency with jurisdiction over same. Where appropriate separation from a water main is not possible, the sewer must be encased in concrete, or constructed of ductile iron pipe using mechanical or slip-on joints for a distance of at least 10 feet on either side of the crossing. In addition, one full length of sewer pipe should be located so both joints will be as far from the water line as possible. Where a water main crosses under a sewer, adequate structural support for the sewer must be provided.

37. Contractor's price for water service must include all fees, costs and appurtenances required by the utility to provide full and complete working service.

38. Contractor must contact the applicable water company to confirm the proper water meter and vault, prior to commencing construction. Water main and water service piping shall be installed in accordance with the requirements and specifications of the water authority having jurisdiction. In the absence of such specifications, water main piping must ductile iron (DIP) minimum Class 54. All work and materials must comply with the applicable American Water Works Association (AWWA) standards in effect at the time of the service application.

39. The contractor shall ensure that all work located in existing pavement be repaired in accordance with municipal, county and/or DOT details as applicable. Contractor is responsible to coordinate the permitting, inspection and approval of completed work with the agency having jurisdiction over the proposed work.

40. Where sump pumps are installed, all discharges must be connected to the storm sewer or discharged to an approved location.

41. For single and multi-family residential projects, spot elevation(s) adjacent to the buildings are schematic for non-specific building footprints. Grades must be adjusted based on final architectural plans and shall provide a minimum of six (6) inches below top of foundation/concrete and/or six (6) inches below the façade treatment, whichever is lower, and must provide positive drainage away from the structure (minimum of 2%). All areas shall be graded to preclude ponding adjacent to buildings, and on or adjacent to walks/driveways leading to the buildings. All construction, including grading, must comply with all applicable building codes, local, state and federal requirements, regulations and ordinances.

42. Contractor shall maintain and control traffic on and offsite in conformance with the current Federal Highway Administration (FHWA) "Manual on Uniform Traffic Control Devices"(MUTCD), and the federal, state, and local regulations for all aspects of demolition and site work. If a Maintenance of Traffic Plan is required for work that affects public travel either on or offsite, the contractor shall be responsible for the cost and implementation of said plan.

43. All temporary and permanent onsite and offsite signage and pavement markings shall conform to MUTCD, ADA, state DOT, and/or local approval requirements.

44. Contractor shall prevent the emission of dust, sediment, and debris from the site, and shall be responsible for corrective measures such as street sweeping, and clean-up work as deemed necessary by the Engineer orthe authority having jurisdiction.

45. All concrete must be air entrained with a minimum compressive strength of 4,000 psi at 28 days unless otherwise specified on the plans, details and/or geotechnical report.

46. The Engineer will review contractor submittals which the contractor is required to submit, but only for the sole purpose of checking for general conformance with the intent of the design and contract documents. The Engineer is not responsible for any deviations from the construction documents unless contractor received explicit direction to do so, in writing, from the Engineer. The contractor remains responsible for details and accuracy, for confirming and correlating all quantities and dimensions, and for techniques of assembly and/or fabrication processes.

47. All dimensions are to face of curb, edge of pavement, or edge of building, unless noted otherwise.

48. The contractor shall install and/or construct all aspects of the project in strict compliance with and accordance with manufacturer's written installation standards, recommendations and specifications.

AMERICANS WITH DISABILITY ACT NOTES TO CONTRACTOR:

The contractor shall review the proposed construction with the local building official prior to the start of construction. Contractors shall be precise in the construction of Americans with Disabilities Act (ADA) accessible parking, components, and accessible routes for the project. These components shall comply with all applicable state and local accessibility laws and regulations and the current ADA regulations and construction standards. These components include, but are not limited to the following:

- Parking spaces and parking aisles shall not exceed a 1:50 (nominally 2.0%) slope in any direction.
- Accessible routes shall be a minimum of 36" wide (unobstructed). Handrails and car overhangs may not obstruct these areas. Longitudinal slopes (direction of travel) shall not exceed 1:20 (5.0%) and shall have a cross slope no greater than 1:50 (2.0%).
- Accessible routes exceeding 1:20 (5.0%) shall be considered a "ramp". Maximum slopes of a ramp shall be 1:12 (8.3%) in the direction of travel, and a cross slope of 1:50 (2.0%). Ramps shall have maximum rise of thirty (30) inches, shall be equipped with hand rails on both sides, and landings at the top and bottom of the ramp. Landings shall not exceed 1:50 (2.0%) in any direction and have positive drainage away from the landing.
- A landing shall be provided at the exterior of all doors and at each end of ramps. Landings shall not exceed 1:50 (2.0%) in any direction and have positive drainage away from the landing and/or building. The landing shall be no less than 60 inches long unless permitted otherwise per the ADA regulations.
- Curb ramps- shall not exceed a 1:12 (8.3%) slope for a maximum length of six (6) feet or a maximum rise of six (6) inches.
- The contractor shall verify all existing elevations shown on the plan in areas of existing doorways, accessible routes or other areas where re-construction is proposed. The contractor shall immediately notify the Owner and Engineer in writing if any of the proposed work intended to meet ADA requirements is incapable of doing so, or if there is any ambiguity regarding which design components are intended to meet ADA requirements. The contractor shall not commence the work in the affected area until receiving written resolution from Engineer.

LEGEND

EXISTING	DESCRIPTION	PROPOSED
BORINGS		
TP	BORING / TEST PIT LOCATION	TP
COMMUNICATION		
— — — C_X — — — C_X —	UNDERGROUND COMMUNICATION LINES	C
DOMESTIC WATER		
— — — W_X — — — W_X —	WATER MAIN	W
— — — WS_X — — —	WATER SERVICE	WS
— — — F_X — — — F_X —	FIRE SERVICE LINE	F
— — — NPW_X — — —	NON-POTABLE WATER LINE	NPW
WV WV	WATER VALVE / FIXTURES	WV
	FIRE HYDRANT	
LIQUID FUEL		
— — — LF_X — — —	MAIN LIQUID FUEL LINE	LF
— — — LFS_X — — —	LIQUID FUEL SERVICE LINE	LFS
— — — LF_G — — —	LIQUID FUEL LINE, ABANDONED	
IRRIGATION		
— — — I_X — — — I_X —	IRRIGATION LINES	I
LIGHTING		
/	POLE / GROUND MOUNTED LIGHT	/
NATURAL GAS		
— — — G_X — — — G_X —	GAS MAIN	G
— — — GS_X — — —	GAS SERVICE LINE	GS
POWER		
— — — EO_X — — —	ELECTRICAL LINES, OVERHEAD	EO
— — — EU_X — — —	ELECTRICAL LINES, UNDERGROUND	EU
	UTILITY POLE	
PROPERTY		
	PROPERTY LINE	
	EASEMENT LINE	
	IRON PIPE	
	IRON ROD	●
	MONUMENT	■
ROADS		
	GUARD RAIL	
EROSION CONTROL		
	SILT FENCE	SF
SITE FEATURES		
	4" DOUBLE SOLID YELLOW LINE	DSYL
	4" SINGLE SOLID WHITE LINE	SSWL
	BIT. CONC. LIP CURB	BCLC
	PRECAST CONCRETE CURB	PCC
SANITARY SEWER		
— — — S_X — — — S_X —	SANITARY SEWER MAIN	S
— — — SS_X — — — SS_X —	SANITARY SEWER SERVICE LINE	SS
S	SANITARY SEWER MANHOLE	S
STORM SEWER		
	STORM DRAIN PIPE	
— — — RL_X — — — RL_X —	ROOF LEADER	RL
— — — UD — — — UD —	UNDERDRAIN	— — — UD — — — UD —
D	STORM DRAIN MANHOLE	D
	CURB INLET	
	CATCH BASIN	
	YARD DRAIN	
TOPOGRAPHY		
— — — 95 — — —	CONTOUR	95
×61.95	SPOT ELEVATION	● 95
OTHER		
	RAMP	R
	LANDSCAPE AREA	LSA

PROPERTY OWNER:
FOUR WOODS LLC
C/O JOHN J WOODCOCK III
89 SADDLEBACK DRIVE
SOUTH WINDSOR, CT 06074
APPLICANT:
SCANNELL PROPERTIES #644, LLC
294 GROVE LANE EAST
SUITE 140
WAYZATA, MN 55391
(763) 331-8851

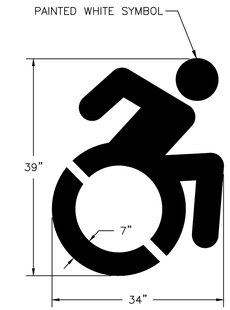

1 ACCESSIBLE PARKING SYMBOL
Not to Scale

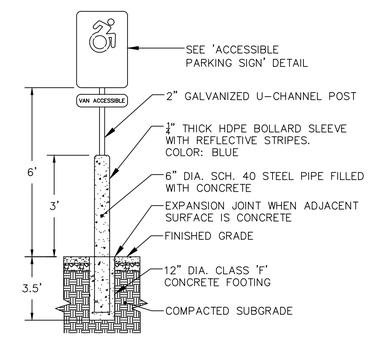

2 ACCESSIBLE PARKING SIGN POST
Not to Scale

NOTES:

1. SIGNS SHALL BE 18 GAUGE FLAT SCREENED ALUMINUM.
2. FOR POST MOUNTING, USE TWO HOT-DIPPED GALVANIZED MACHINE BOLTS WITH WASHERS.
3. FOR WALL MOUNTING, USE FOUR HOT-DIPPED GALVANIZED LAG BOLTS WITH EXPANSION SHIELD.

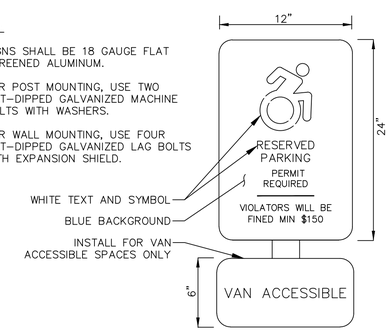

3 ACCESSIBLE PARKING SIGN
Not to Scale

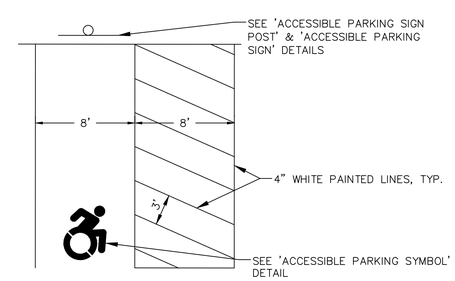

NOTES:

1. ACCESSIBLE PARKING SPACES AND ADA PASSENGER LOADING AREAS SHALL BE GRADED WITH A MAXIMUM SLOPE OF 1:50 (2%) IN ALL DIRECTIONS.

4 VAN ACCESSIBLE PARKING SPACE
Not to Scale

Copyright © 2022 Design Professionals, Inc. — All Rights Reserved

21 FERGUSON DRIVE
P.O. BOX 70
SOUTH WINDSOR, CT 06074
860-291-8755 – T
860-291-8757 – F
www.designprofessionals.com
design professionals
CIVIL & TRAFFIC ENGINEERS / LAND SURVEYORS
PLANNERS / LANDSCAPE ARCHITECTS

• The plans, details, data & specs are the sole property of Design Professionals, Inc. Any alteration to the original signed & sealed plans, specs or details, or any reproduction thereof, without the written consent of Design Professionals, Inc., is prohibited.
• Reproduction techniques used in the production of this plan, can stretch or shrink the paper. Scale of the drawing may not be accurate. Contact DP, if additional information is required.
• This plan and other plans prepared by Design Professionals, Inc. are instruments of service and shall remain the property of those firms. Design Professionals, Inc. and DP Additional use of these items is prohibited without the express written consent of DP.

PREPARED FOR:
Scannell Properties #644, LLC
294 Grove East
Suite 140
Wayzata, MN 55391
763-331-8851 T

PROJECT NO.	4670
DATE	3/30/2022
DRAWN BY:	CHJ/BPW
CHECKED BY:	CHJ/BPW
APPROVED BY:	BPW

67 KENNEDY ROAD
WAREHOUSE &
DISTRIBUTION CENTER
352 SULLIVAN AVENUE, 67 & 68 KENNEDY ROAD
SOUTH WINDSOR, CONNECTICUT 06074
GIS NOs: 87300352, 49800067, & 49800068

REVISIONS

NO.	DATE		BY

NOTES, LEGEND, & DETAILS

SHEET
C-D1
SHEET 19 OF 24

File: C:\jobs\4670\Engineering\AutoCAD\4670 Details.dwg Layout: 19 C-D1 Plotted: 3/30/2022 10:04 AM Last Saved: 3/30/2022 10:04 AM Last Saved By: benwheeler

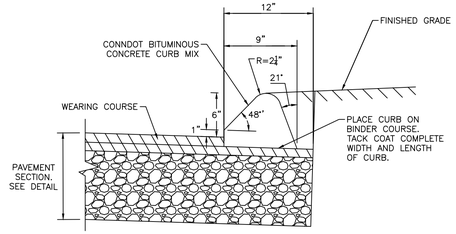

NOTE:

BITUMINOUS CONCRETE CURBING SHALL BE INSTALLED PER CONNDOT STANDARD SPECIFICATIONS FOR ROADS, BRIDGES, FACILITIES AND INCIDENTAL CONSTRUCTION, LATEST EDITION.

1 BITUMINOUS CONCRETE LIP CURB

Not to Scale

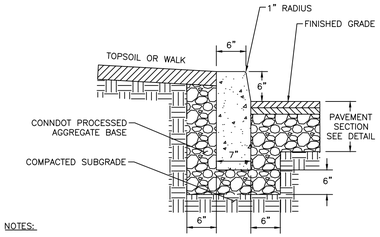

NOTES:

1. ALL CONCRETE SHALL BE CONNDOT CLASS 'F' OR EQUIVALENT.
2. THE END OF CURB SECTIONS SHALL BE CHAMFERED 1".
3. CURB, CURB CORNERS OR EDGING SHALL MATCH THE ADJACENT CURB IN SIZE, COLOR AND FINISH.
4. CURBS, CURB CORNERS OR EDGING SHALL BE FITTED TOGETHER AS CLOSELY AS POSSIBLE.
5. EXPANSION JOINTS SHALL BE INSTALLED AT A MAXIMUM OF 20 FEET ON CENTER USING PREFORMED EXPANSIONS JOINT FILLER HAVING A THICKNESS OF ½".
6. WHEN ABUTTING CONCRETE WALKS, INSTALL PREFORMED EXPANSIONS JOINT FILLER HAVING A THICKNESS OF ½" ALONG LENGTH OF WALK.
7. CONCRETE CURBING SHALL BE INSTALLED PER CONNDOT STANDARD SPECIFICATIONS FOR ROADS, BRIDGES, FACILITIES AND INCIDENTAL CONSTRUCTION, LATEST EDITION.

2 PRECAST CONCRETE CURB

Not to Scale

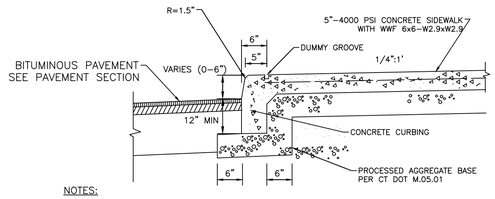

NOTES:

1. ALL CONCRETE FOR SIDEWALKS SHALL BE CLASS 'F'. MEET CONNECTICUT D.O.T. SPECIFICATIONS. REFER TO FORM 817
2. CONCRETE SURFACE TO BE SCORED AT 5 FOOT INTERVALS.
3. EXPANSION JOINTS SHALL BE INSTALLED EVERY 15 FEET.
4. PROVIDE BROOMED FINISH PERPENDICULAR TO TRAVEL PATH

3 MONOLITHIC CONCRETE WALK AND CURB

Not to Scale

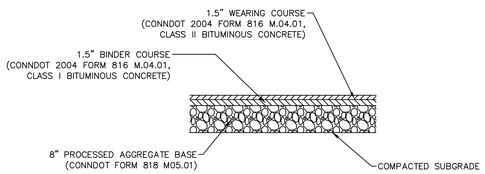

NOTES:

1. DETAIL IS PREPARED FOR PLANNING PURPOSES ONLY. IN THE ABSENCE OF A GEOTECHNICAL REPORT, CONTRACTOR SHALL COORDINATE WITH OWNER AND DEVELOPER TO OBTAIN OR DETERMINE IF GEOTECHNICAL PAVEMENT AND SECTION DESIGNS ARE REQUIRED.

4 BITUMINOUS CONCRETE STANDARD DUTY PAVEMENT

Not to Scale

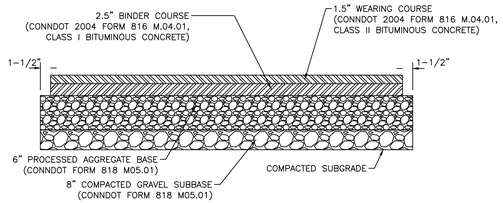

NOTES:

1. HEAVY DUTY PAVEMENT AREA NOTED ON SITE PLAN. ALL OTHER PAVEMENT AREAS TO BE STANDARD DUTY.
2. DETAIL IS PREPARED FOR PLANNING PURPOSES ONLY. IN THE ABSENCE OF A GEOTECHNICAL REPORT, CONTRACTOR SHALL COORDINATE WITH OWNER AND DEVELOPER TO OBTAIN OR DETERMINE IF GEOTECHNICAL PAVEMENT AND SECTION DESIGNS ARE REQUIRED.

5 BITUMINOUS CONCRETE HEAVY DUTY PAVEMENT

Not to Scale

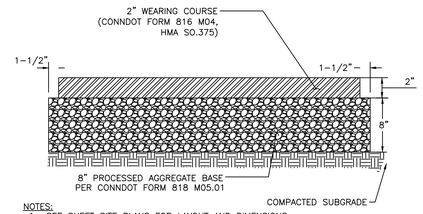

NOTES:

1. SEE SHEET SITE PLANS FOR LAYOUT AND DIMENSIONS.
2. FOR WET SUBGRADE CONDITIONS THERE MAY BE A REQUIREMENT TO PLACE AN INITIAL 10+" LAYER OF 3/4" CRUSHED STONE ON A GEOTEXTILE FABRIC TO PROVIDE A STABLE BASE FOR EQUIPMENT.

6 BITUMINOUS CONCRETE SIDEWALK

Not to Scale

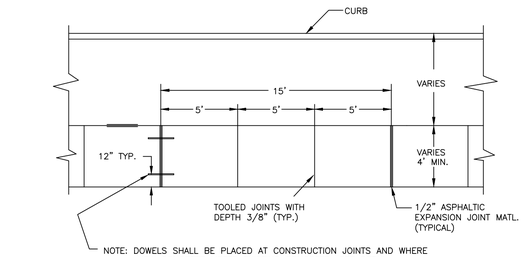

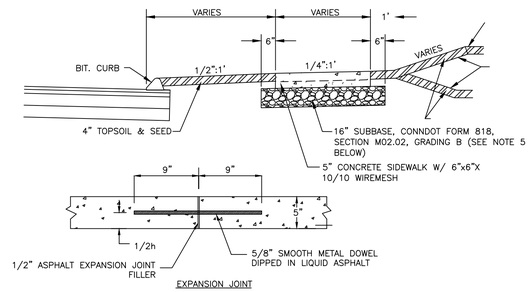

EXPANSION JOINT

NOTES:

1. ALL CONCRETE FOR SIDEWALKS SHALL BE CLASS 'F'. MEET CONNECTICUT D.O.T. SPECIFICATIONS. REFER TO FORM 818.
2. CONCRETE SURFACE TO BE SCORED AT 5 FOOT INTERVALS.
3. EXPANSION JOINTS SHALL BE INSTALLED EVERY 15 FEET.
4. PROVIDE BROOMED FINISH PERPENDICULAR TO TRAVEL PATH.
5. SUBBASE DEPTH SHALL BE 24" FOR CONCRETE APRONS AT BUILDING.
6. PAVEMENT SECTION BASED UPON RECOMMENDATIONS OF GEOTECH REPORT PREPARED BY WELTI GEOTECHNICAL, P.C. DATED NOV. 6, 2020.
7. FOR WET SUBGRADE CONDITIONS THERE MAY BE A REQUIREMENT TO PLACE AN INITIAL 10+" LAYER OF 3/4" CRUSHED STONE ON A GEOTEXTILE FABRIC TO PROVIDE A STABLE BASE FOR EQUIPMENT.

7 CONCRETE SIDEWALK

Not to Scale

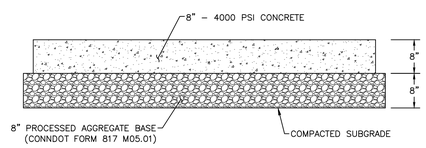

NOTES:

1. DETAIL IS PREPARED FOR PLANNING PURPOSES ONLY. IN THE ABSENCE OF A GEOTECHNICAL REPORT, CONTRACTOR SHALL COORDINATE WITH OWNER AND DEVELOPER TO OBTAIN OR DETERMINE IF GEOTECHNICAL PAVEMENT AND SECTION DESIGNS ARE REQUIRED.
2. CONCRETE SHALL BE MIXED PER SPECIFICATION OUTLINED IN CONNDOT FOR 817 M.03.

8 CONCRETE DOCK APRON

Not to Scale

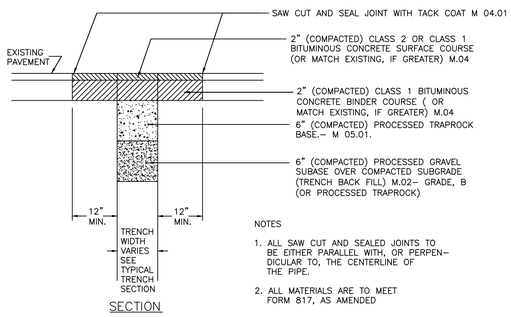

SECTION

NOTES

1. ALL SAW CUT AND SEALED JOINTS TO BE EITHER PARALLEL WITH, OR PERPENDICULAR TO, THE CENTERLINE OF THE PIPE.
2. ALL MATERIALS ARE TO MEET FORM 817, AS AMENDED

9 PERMANENT PAVEMENT PATCHING

Not to Scale

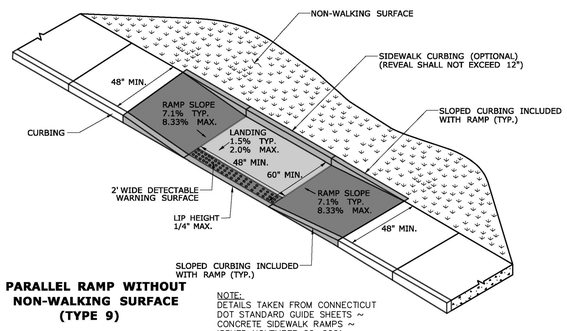

PARALLEL RAMP WITHOUT NON-WALKING SURFACE (TYPE 9)

NOTE:
DETAILS TAKEN FROM CONNECTICUT DOT STANDARD GUIDE SHEETS ~ CONCRETE SIDEWALK RAMPS ~ ISSUED NOVEMBER 22, 2021

10 CONCRETE SIDEWALK RAMP

Not to Scale

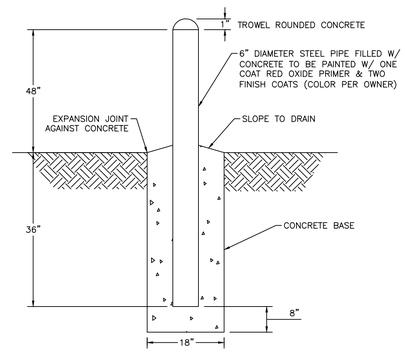

11 CONCRETE BOLLARD

Not to Scale

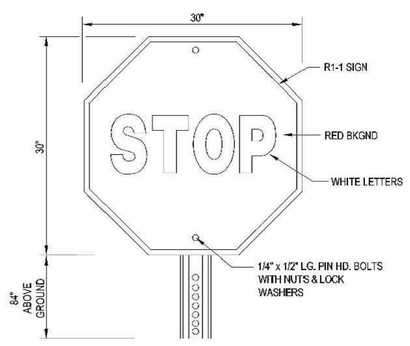

12 STOP SIGN

Not to Scale

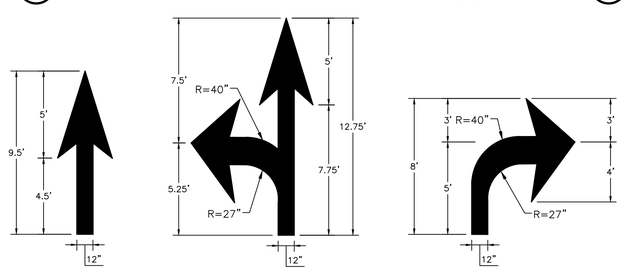

NOTE:

1. PAVEMENT TRAFFIC ARROW DIMENSIONS TAKEN FROM CTDOT STANDARD SHEET "TR-1210_04: PAVEMENT MARKING LINES AND SYMBOLS".

13 TRAFFIC ARROWS

Not to Scale

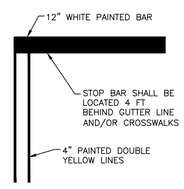

14 STOP BAR

Not to Scale

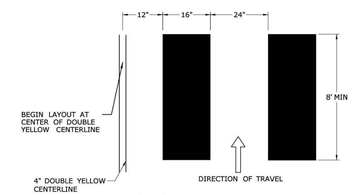

NOTE:

1. CROSSWALK LINES SHALL BE PARALLEL TO VEHICULAR DIRECTION OF TRAVEL.
2. CROSSWALK DETAIL TAKEN FROM CTDOT STANDARD SHEET "TR-1210_04: PAVEMENT MARKING LINES AND SYMBOLS".

15 CROSSWALK

Not to Scale

PROPERTY OWNER:
FOUR WOODS LLC
C/O JOHN J WOODCOCK III
89 SADDLEBACK DRIVE
SOUTH WINDSOR, CT 06074

APPLICANT:
SCANNELL PROPERTIES #644, LLC
294 GROVE LANE EAST
SUITE 140
WAYZATA, MN 55391
(763) 331-8851

File: C:\jobs\4670\Engineering\AutoCAD\4670 Details.dwg Layout: 20 C-D2 Plotted: 3/30/2022 10:04 AM Last Saved: 3/30/2022 10:04 AM Last Saved By: benwheeler

Copyright © 2022 Design Professionals, Inc. — All Rights Reserved

21 FRESH DRIVE
PO BOX 1592
SOUTH WINDSOR, CT 06074
860-291-9755 – T
860-291-9757 – F
www.designprofessionals.com
Design Professionals
CIVIL & TRAFFIC ENGINEERS / LAND SURVEYORS
PLANNERS / LANDSCAPE ARCHITECTS

This plan is valid only if bears the seal or stamp and original signature of the Professional Engineer, Land Surveyor or Landscape Architect.

Reproduction techniques used in the production of this plan, can stretch or shrink the paper. Scaling of this plan may not provide accurate measurements.

This plan and other plans prepared by Design Professionals, Inc. are the property of Design Professionals and cannot be used for any purpose other than the original project, and DPI. Additional use of these items is prohibited without the expressed written consent of DPI.

PREPARED FOR:
Scannell Properties #644, LLC
294 Grove Lane East
Suite 140
Wayzata, MN 55391
763-331-8851 T

PROJECT NO. 4670
DATE: 3/30/2022
DRAWN BY: CHH/BPW
CHECKED BY: CHH/BPW
SCALE: BPW

67 KENNEDY ROAD
WAREHOUSE &
DISTRIBUTION CENTER
352 SULLIVAN AVENUE, 67 & 68 KENNEDY ROAD
SOUTH WINDSOR, CONNECTICUT 06074
GIS NOS. 87300352, 49800067, & 49800068

REVISIONS

NO.	DATE		BY

DETAILS

SHEET
C-D2
SHEET 20 OF 24

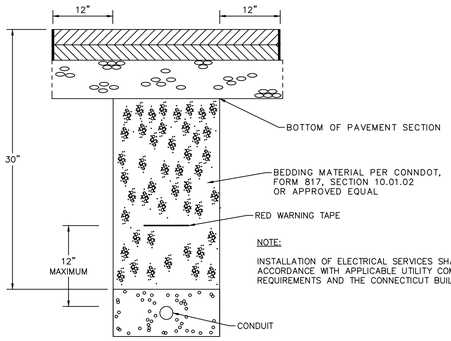

1 ELECTRIC TRENCH SECTION

Not to Scale

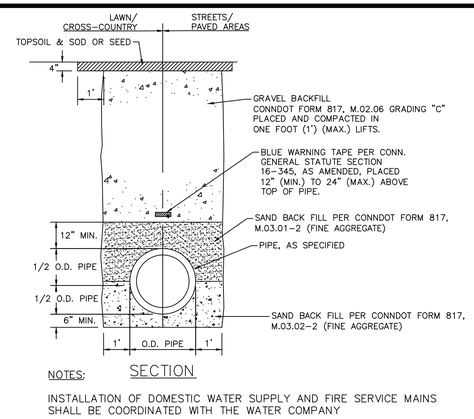

NOTES:

INSTALLATION OF DOMESTIC WATER SUPPLY AND FIRE SERVICE MAINS SHALL BE COORDINATED WITH THE WATER COMPANY

2 WATER TRENCH SECTION

Not to Scale

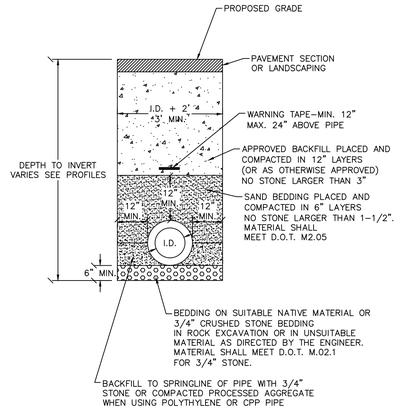

3 STORM SEWER TRENCH SECTION

Not to Scale

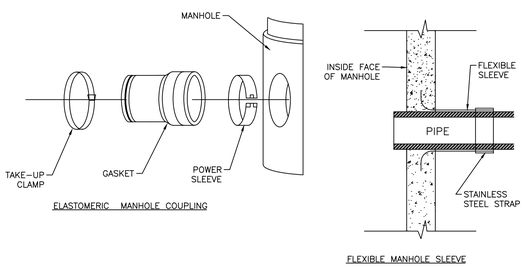

4 SANITARY LATERAL CONNECTION TO MANHOLE

Not to Scale

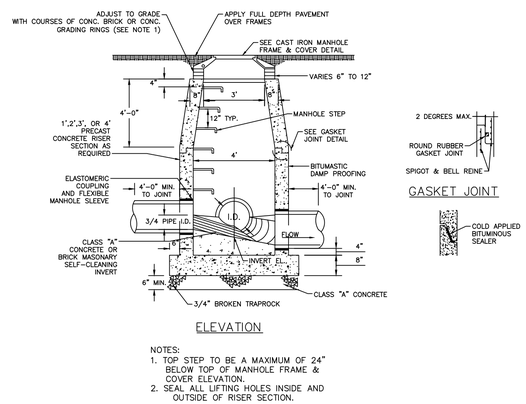

NOTES:
1. TOP STEP TO BE A MAXIMUM OF 24" BELOW TOP OF MANHOLE FRAME & COVER ELEVATION.
2. SEAL ALL LIFTING HOLES INSIDE AND OUTSIDE OF RISER SECTION.

5 SANITARY MANHOLE

Not to Scale

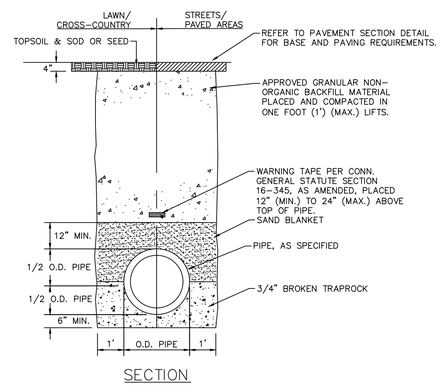

6 SANITARY SEWER TRENCH SECTION

Not to Scale

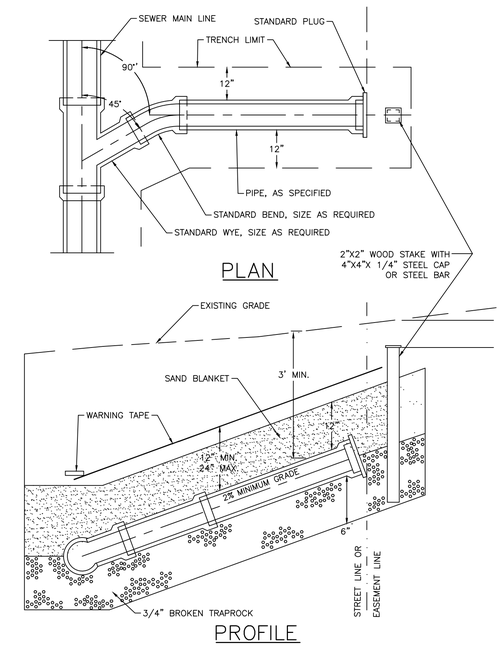

7 BUILDING SEWER

Not to Scale

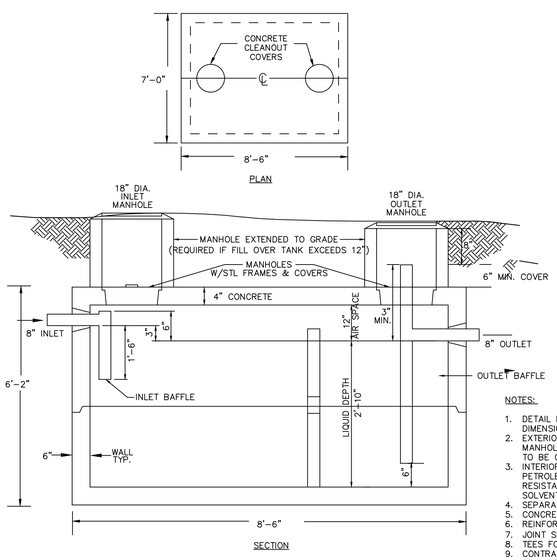

NOTES:

1. DETAIL PROVIDED FOR ILLUSTRATIVE PURPOSES ONLY. FINAL DIMENSIONS FOR 1000 AND 2000 GALLON TANK MAY VARY.
2. EXTERIOR OF SEPARATOR AND EXTENSION TO GRADE MANHOLES TO BE COATED WITH A WATERPROOF SEALANT.
3. INTERIOR OF SEPARATOR TO BE COATED WITH EPOXY PETROLEUM RESISTANT SEALANT RESISTANT TO GASOLINE, OIL, AND SOLVENTS.
4. SEPARATOR TO BE STRUCTURALLY SEAMLESS.
5. CONCRETE – 5000 PSI AT 28 DAYS.
6. REINFORCED FOR H-20 LOADING.
7. JOINT SEALED W/BUTYL RUBBER GASKET.
8. TEES FOR INLET & OUTLET ARE SUPPLIED BY PURCHASER.
9. CONTRACTOR SHALL COORDINATE WITH MANUFACTURER TO PROVIDE APPROPRIATE AND ADEQUATE BUOYANCY MITIGATION.
10. GREASE TRAP TANKS SHALL HAVE H-20 RATED RISERS AND COVERS

8 PRECAST CONCRETE OIL/WATER SEPARATOR

Not to Scale

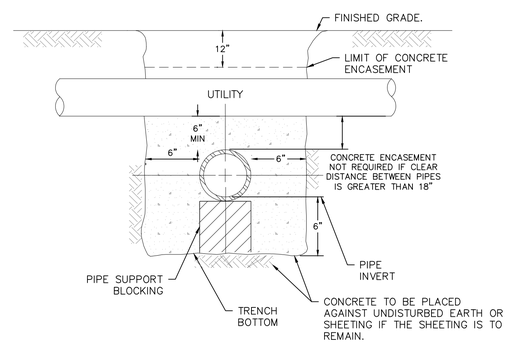

NOTES:
1. CONCRETE ENCASEMENT NOT REQUIRED IF CLEAR DISTANCE BETWEEN PIPES IS GREATER THAN 18"
2. PIPES MUST BE PLACED VERTICALLY AND HORIZONTALLY TO PREVENT FLOATING DURING PLACEMENT OF CONCRETE
3. ALL CONCRETE ENCASEMENTS SHALL BE KEPT 12" BELOW THE BOTTOM OF ASPHALT PAVEMENT.
4. CONCRETE SHALL EXTEND 1.5' IN EITHER DIRECTION OF CROSSING EXCEPT FOR WATER/SEWER CROSSINGS WHICH SHALL EXTEND 10' IN EITHER DIRECTION OF CROSSING.

9 STORM & SEWER CROSSING CONCRETE ENCASEMENT

Not to Scale

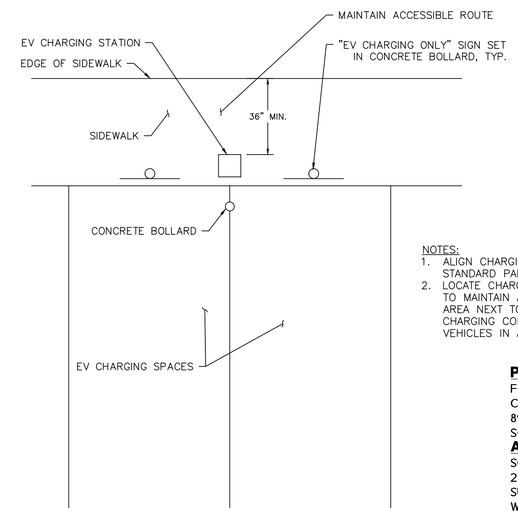

NOTES:
1. ALIGN CHARGING STATION WITH STRIPE IN BETWEEN STANDARD PARKING SPACES
2. LOCATE CHARGING STATIONS FOR ACCESSIBLE SPACES TO MAINTAIN ACCESSIBLE ROUTE, INCLUDING HATCHED AREA NEXT TO PARKING. THIS INCLUDES WHEN CHARGING CORDS ARE EXTENDED AND CHARGING VEHICLES IN ACCESSIBLE PARKING SPACES.

PROPERTY OWNER:
FOUR WOODS LLC
C/O JOHN J WOODCOCK III
89 SADDLEBACK DRIVE
SOUTH WINDSOR, CT 06074
APPLICANT:
SCANNELL PROPERTIES #644, LLC
294 GROVE LANE EAST
SUITE 140
WAYZATA, MN 55391
(763) 331-8851

10 EV CHARGING STATION LAYOUT

Not to Scale

Copyright © 2022 Design Professionals, Inc. – All Rights Reserved

21 FRESEY DRIVE
P.O. BOX 1307
SOUTH WINDSOR, CT 06074
860-291-9755 – T
860-291-9757 – F
www.designprofessionals.com
Design Professionals
CIVIL & TRAFFIC ENGINEERS / LAND SURVEYORS
PLANNERS / LANDSCAPE ARCHITECTS

• The plans, specs, and other docs prepared by Design Professionals, Inc. for this project are instruments of service and shall remain the property of Design Professionals, Inc. and DPI. Reproduction of these plans, specs, or docs, in whole or in part, without DPI's written permission, and DPI's additional pay of DPI's customary and reasonable fees, is prohibited.
• Reproduction techniques used in the production of this plan, can stretch or shrink the paper. Scale of the original drawing is indicated in the title block. Adjust information is required.
• The plans and other docs prepared by Design Professionals, Inc. for this project are instruments of service and shall remain the property of Design Professionals, Inc. and DPI. Additional pay of DPI's customary and reasonable fees is required for any alterations to the plans and other docs.

PREPARED FOR:
Scannell Properties #644, LLC
294 Grove Lane East
Suite 140
Wayzata, MN 55391
763-331-8851 T

PROJECT NO.	DATE	DRAWN BY:	CHKD BY:
4670	3/30/2022	CHI/BPW	BPW

67 KENNEDY ROAD
WAREHOUSE & DISTRIBUTION CENTER
352 SULLIVAN AVENUE, 67 & 68 KENNEDY ROAD
SOUTH WINDSOR, CONNECTICUT 06074
GIS NOs. 87300352, 49800067, & 49800068

REVISIONS

NO.	DATE		BY

DETAILS

SHEET
C-D3
SHEET 21 OF 24

File: C:\jobs\4670\Engineering\AutoCAD\4670 Details.dwg Layout: 21 C-D3 Plotted: 3/30/2022 10:05 AM Last Saved: 3/30/2022 10:04 AM Last Saved By: bwheeler

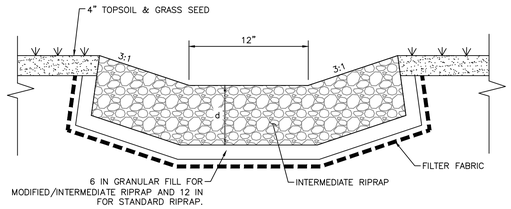

1 RIPRAP APRON SECTION VIEW

Not to Scale

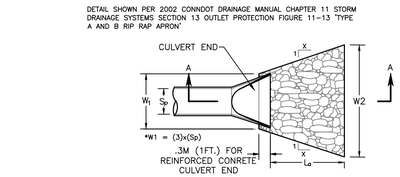

2 RIPRAP APRON PLAN VIEW

Not to Scale

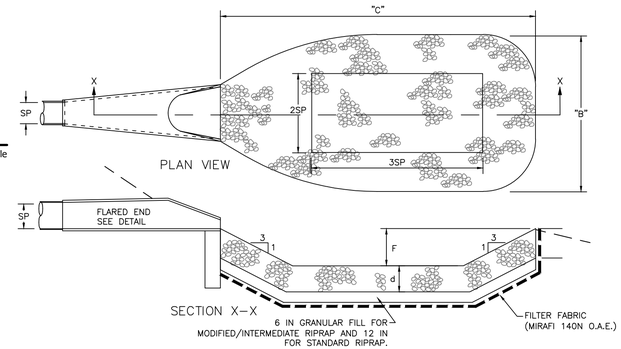

3 RIPRAP PREFORMED SCOUR HOLE

Not to Scale

NOTES:

1) d = 12 IN (WHEN MODIFIED RIPRAP SPECIFIED)
18 IN (WHEN INTERMEDIATE RIPRAP SPECIFIED)
36 IN (WHEN STANDARD RIPRAP SPECIFIED)
2) RIPRAP GRADATIONS SHALL MEET CT DOT FORM 816 SECTION M.12.02
3) FILTER FABRIC SHALL BE NONWOVEN AND SHALL MEET AASHTO M288-00, CLASS 2

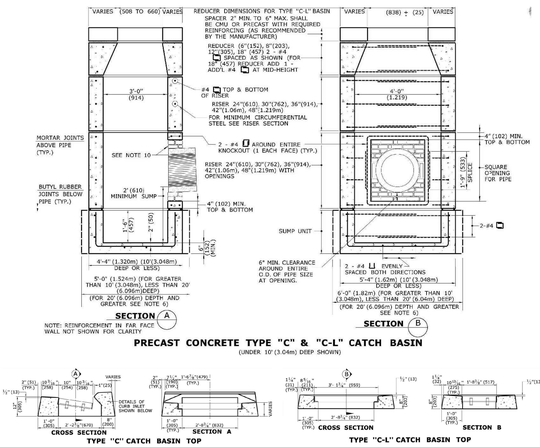

REFER TO CONNDOT STANDARD SHEET HW-0507-04 FOR ADDITIONAL NOTES, SECTIONS AND INSTALLATION REQUIREMENTS
REFER TO CONNDOT STANDARD SHEET HW-507-08 FOR FRAME AND GRATE REQUIREMENTS

6 TYPE C & CL CATCH BASIN

Not to Scale

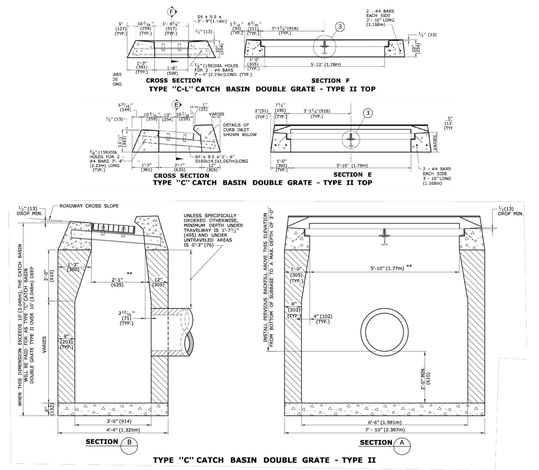

REFER TO CONNDOT STANDARD SHEET HW-0507-03 FOR ADDITIONAL NOTES, SECTIONS AND INSTALLATION REQUIREMENTS
REFER TO CONNDOT STANDARD SHEET HW-507-08 FOR FRAME AND GRATE REQUIREMENTS

7 TYPE C & CL CATCH BASIN - TYPE II

Not to Scale

NOTES:

1. IF CLEANOUT IS LOCATED IN PAVEMENT OR SIDEWALK, PROVIDE STEEL FRAME AND GRATE. SPECIFICATIONS TO BE APPROVED BY TOWN ENGINEER.

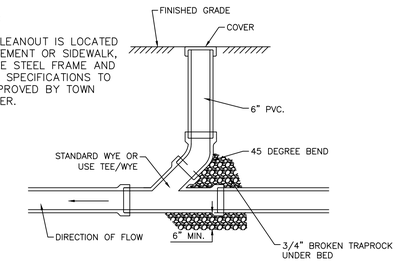

4 CLEAN OUT

Not to Scale

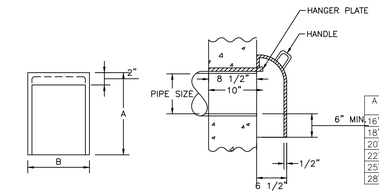

NOTE:

1. MANUFACTURER CATALOG NUMBER TO BE INDICATED ON SHOP DRAWINGS FOR CAST IRON TRAPS.

A	B	PIPE SIZE	WT. LBS.	SETTING METHOD
16"	12"	TO 6"	70	2 HOOKS
18"	12"	8"	75	2 HOOKS
20"	12"	10"	85	2 HOOKS
22"	16"	12"	100	2 HOOKS
25"	17"	15"	135	2 HOOKS
28"	20"	18"	155	2 HOOKS

5 CATCH BASIN TRAP HOOD

Not to Scale

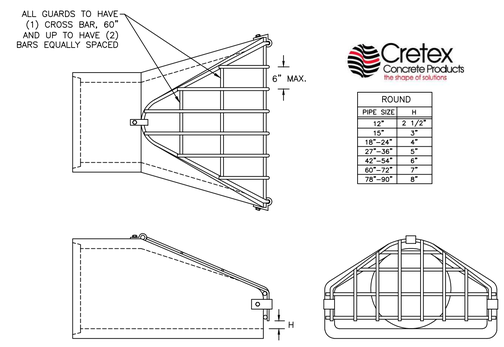

Cretex Concrete Products
the shape of solutions

ROUND	
PIPE SIZE	H
12"	2 1/2"
15"	3"
18"-24"	4"
27"-36"	5"
42"-54"	6"
60"-72"	7"
78"-90"	8"

BAR SIZES							
STANDARD DESIGN				HEAVY DESIGN			
PIPE SIZE	HOLE DIA. REQ'D	BOLT DIA.	BAR SIZE	PIPE SIZE	HOLE DIA. REQ'D	BOLT DIA.	BAR SIZE
12"-24"	3/4"	5/8"	5/8"	12"-18"	3/4"	5/8"	3/4"
27"-48"	7/8"	3/4"	3/4"	21"-42"	7/8"	3/4"	1"
54"-90"	1 1/8"	1"	1"	48"-90"	1 1/8"	1"	1 1/4"
BOLT LENGTH = PIPE WALL THICKNESS + 2 1/2"							

NOTES:

1. CRETEX CONCRETE PRODUCTS, FLARED END TRASH GUARD SHOWN FOR ILLUSTRATIVE PURPOSES ONLY. CONTRACTOR SHALL USE THIS PRODUCT OR APPROVED EQUAL.

8 FLARED END TRASH GUARD

Not to Scale

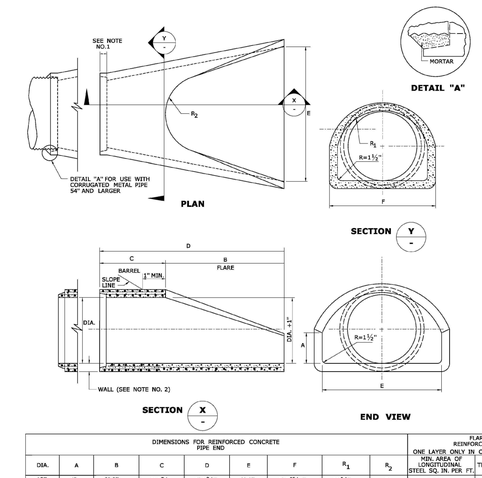

DIMENSIONS FOR REINFORCED CONCRETE PIPE END									FLARE REINFORCEMENT ONE LAYER ONLY IN CENTER OF WALL	
DIA.	A	B	C	D	E	F	R_1	R_2	MIN. AREA OF LONGITUDINAL STEEL SQ. IN. PER FT.	MIN. AREA OF TRANSVERSE STEEL SQ. IN. PER FT.
12"	4"	2'-0"	4'-0 5/8"	6'-0 5/8"	2'-0"	1'-7 15/16"	10 1/4"	9"	0.048	0.048
15"	6"	2'-3"	3'-10"	6'-1"	2'-6"	2'-0 3/16"	1'-0 1/2"	11"	0.054	0.054
18"	9"	2'-3"	3'-10"	6'-1"	3'-0"	2'-9"	1'-3 1/2"	1'-0"	0.060	0.060
21"	9"	2'-11"	3'-2"	6'-1"	3'-6"	2'-7 1/2"	1'-4"	1'-3"	0.066	0.066
24"	9 1/2"	3'-7 1/2"	2'-6"	6'-1 1/2"	4'-0"	2'-9 3/16"	1'-4 15/16"	1'-2"	0.072	0.072
30"	1'-0"	4'-6"	1'-7 1/2"	6'-1 1/2"	5'-0"	3'-1"	1'-6 1/2"	1'-3"	0.084	0.084
36"	1'-3"	5'-3"	1'-10 1/2"	6'-1 1/2"	6'-0"	3'-11 15/16"	2'-0 7/16"	1'-8"	0.096	0.096
42"	1'-9"	5'-3"	2'-11"	6'-2"	6'-6"	4'-9 7/8"	2'-3 1/2"	1'-10"	0.108	0.108
48"	2'-0"	6'-0"	2'-2"	8'-2"	7'-0"	4'-8 1/2"	2'-4 1/2"	1'-10"	0.120	0.120
54"	2'-3"	5'-5"	2'-11"	8'-4"	7'-6"	5'-5 1/2"	2'-9 1/8"	2'-0"	0.132	0.132
60"	2'-9"	5'-0"	3'-3"	8'-3"	8'-0"	6'-0 1/2"	3'-0 11/16"	2'-0"	0.144	0.144

9 REINFORCED CONCRETE PIPE FLARED END

Not to Scale

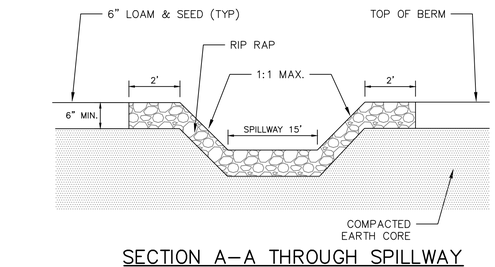

SECTION A-A THROUGH SPILLWAY

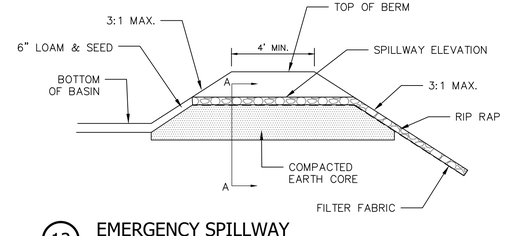

12 EMERGENCY SPILLWAY

Not to Scale

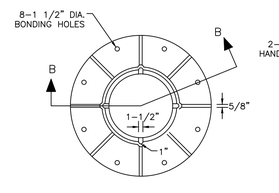

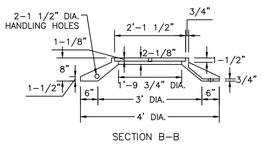

SECTION B-B
CAST IRON FRAME

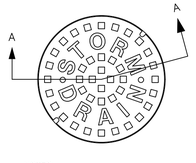

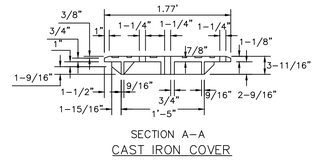

SECTION A-A
CAST IRON COVER

NOTES:

1. THE LOWER SURFACE OF THE COVER AND THE CORRESPONDING UPPER SURFACE OF THE FRAME SHALL BE MACHINE FINISHED TO PROVIDE A SMOOTH FLAT CONTACT OR FIT, WITHOUT ANY TENDENCY FOR THE COVER TO ROCK OR RATTLE.

2. SANITARY SEWER MANHOLES SHALL BE EQUIPPED WITH VENT HOLE IN CENTER.

11 MANHOLE FRAME AND COVER

Not to Scale

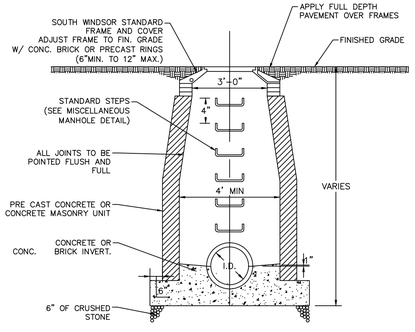

NOTES:

1. REFER TO SHEET C-DR3 FOR NYLOPLAST (PLASTIC) MANHOLE DETAIL,

2. WALL THICKNESS SHALL BE SUFFICIENT TO MEET HS 20 LOADING.

3. WALL THICKNESS FOR STRUCTURES OVER 10' HIGH IS 12" FOR CONCRETE BLOCK UNITS. INSIDE DIMENSIONS REMAIN THE SAME. 3. ALL PIPES SHALL BE CUT FLUSH WITH INSIDE WALLS.

10 STORM DRAIN MANHOLE

Not to Scale

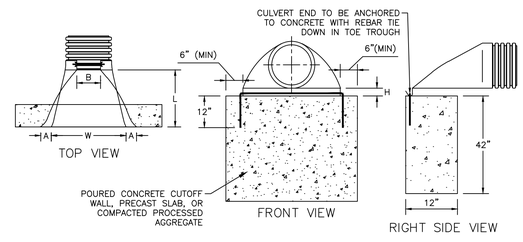

NOTES:

ADS HDPE FLARED ENDS SHOWN FOR ILLUSTRATIVE PURPOSES ONLY. CONTRACTOR SHALL USE THIS PRODUCT AS SPECIFIED OR APPROVED EQUAL.

13 HDPE FLARED END WITH CONCRETE ANCHORING

Not to Scale

PROPERTY OWNER:
FOUR WOODS LLC
C/O JOHN J WOODCOCK III
89 SADDLEBACK DRIVE
SOUTH WINDSOR, CT 06074
APPLICANT:
SCANNELL PROPERTIES #644, LLC
294 GROVE LANE EAST
SUITE 140
WAYZATA, MN 55391
(763) 331-8851

Copyright © 2022 Design Professionals, Inc. — All Rights Reserved

21 FIDELITY DRIVE
SUITE 100
SOUTH WINDSOR, CT 06074
860-291-8750 – T
860-291-8756 – F
www.designprofessionals.com
design professionals
CIVIL & TRAFFIC ENGINEERS / LAND SURVEYORS
PLANNERS / LANDSCAPE ARCHITECTS

• This plan is valid only if bears the seal or stamp and original signature of the Professional Engineer, Land Surveyor or Landscape Architect.
• Reproduction techniques used in the production of this plan can shrink or stretch the paper. Scale of the original drawing is represented in the title block. Adjustment is required.
• This plan and other plans prepared by Design Professionals, Inc. are instruments of service and shall remain its property. The use of these items by DPI, the owner or others for purposes other than those intended by DPI is prohibited.

PREPARED FOR:
Scannell Properties #644, LLC
294 Grove Lane East
Suite 140
Wayzata, MN 55391
763-331-8851 T

PROJECT NO. 4670
DATE 3/30/2022
DRAWN BY: CHJ/BPW
DESIGN BY: CHJ/BPW
CHECKED BY: BPW

67 KENNEDY ROAD
WAREHOUSE & DISTRIBUTION CENTER
352 SULLIVAN AVENUE, 67 & 68 KENNEDY ROAD
SOUTH WINDSOR, CONNECTICUT 06074
GIS NOS. 87300352, 49800067, & 49800068

REVISIONS

NO.	DATE	BY

DETAILS

SHEET
C-D4
SHEET 22 OF 24

File: C:\jobs\4670\Engineering\AutoCAD\4670 Details.dwg Layout: 22 C-D4 Plotted 3/30/2022 10:05 AM Last Saved 3/30/2022 10:04 AM Last Saved By: bernwheeler

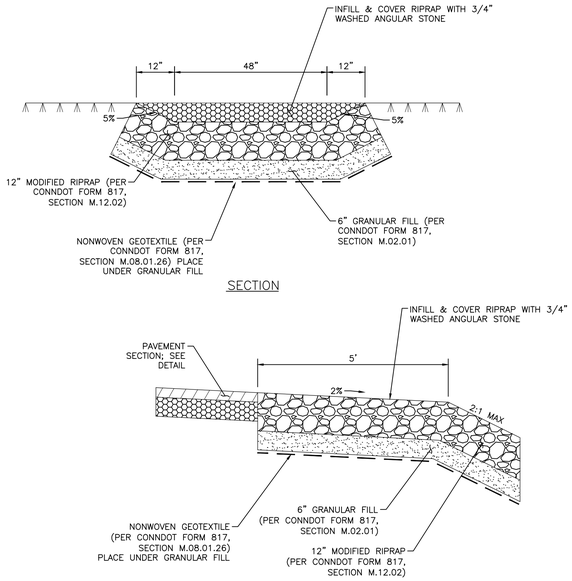

1 PAVED LEAKOFF

Not to Scale

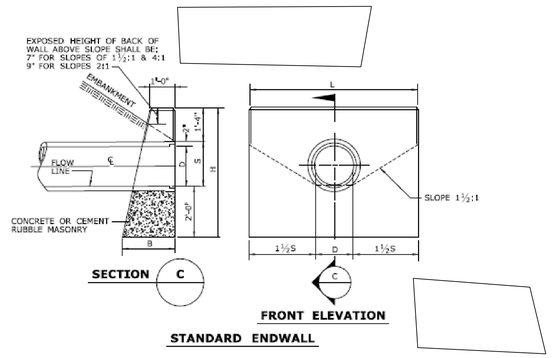

STANDARD ENDWALL

DIMENSIONS AND QUANTITIES FOR ONE ENDWALL BASED ON S = D + 2"						
D	S	H	L	BATTER	B	VOL.
IN.	FT.& IN.	FT.& IN.	FT.& IN.	IN./FT.	FT.& IN.	CU.YD.
12"	1'-2"	4'-5"	4'-6"	2½"	1'-11¼"	1.10
15"	1'-5"	4'-9"	5'-6"	2½"	1'-11⅞"	1.45
18"	1'-8"	5'-0"	6'-6"	2½"	2'-0½"	1.83
24"	2'-2"	5'-8"	8'-6"	2½"	2'-1⅞"	2.72
30"	2'-8"	6'-0"	10'-6"	2½"	2'-3"	3.79
36"	3'-2"	6'-6"	12'-6"	3"	2'-7½"	5.45
42"	3'-8"	7'-0"	14'-6"	3"	2'-9"	6.40*
48"	4'-2"	7'-6"	16'-6"	3"	2'-10½"	8.00*

* VOLUME IS BASED ON D MINUS WALL THICKNESS AT ℄ OF PIPE

H = TOTAL HEIGHT OF ENDWALL
B = BASE
D = INSIDE DIAMETER OF PIPE
S = HEIGHT OF SLOPE ABOVE FLOW LINE AT FACE OF WALL-MINIMUM = D+2"
L = LENGTH OF WALL= 3S+D

ALL EDGES OF EXPOSED SURFACES TO BE CHAMFERED APPROXIMATELY ONE INCH.

2 STANDARD CONCRETE ENDWALL

Not to Scale

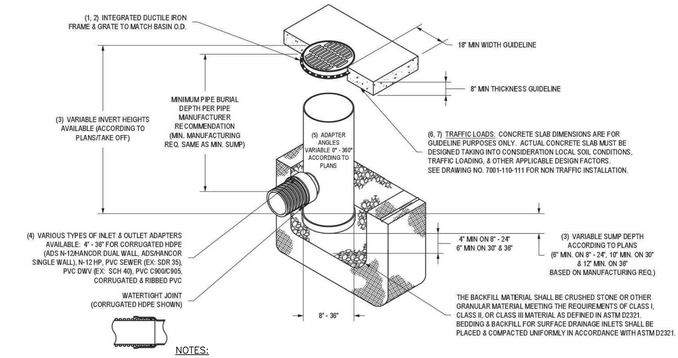

NOTES:

1. NYLOPLAST DRAIN BASIN SHOWN FOR ILLUSTRATIVE PURPOSES. CONTRACTOR TO USE THIS PRODUCT OR APPROVED EQUAL.
2. NYLOPLAST DRAIN MANHOLES TO USE SOLID COVER AND BE CAPPED AT THE BOTTOM WHERE INDICATED ON PLAN. SOLID COVERS SHALL BE DUCTILE IRON PER ASTM A536 GRADE 70-50-05. REFER TO GRADING AND DRAINAGE PLAN SHEETS FOR STRUCTURE LOCATIONS.
3. 12" YARD DRAINS TO BE NYLOPLAST 2812AG OR APPROVED EQUAL
4. 24" YARD DRAINS & DRAIN MANHOLES TO BE NYLOPLAST 2824AG OR APPROVED EQUAL
5. 15" YARD DRAINS & DRAIN MANHOLES TO BE NYLOPLAST 28115AG OR APPROVED EQUAL.
6. 30" DRAIN MANHOLES TO BE NYLOPLAST 2830AG OR APPROVED EQUAL.

3 PLASTIC YARD DRAIN AND DRAIN MANHOLE (12"-30" DIA.)

Not to Scale

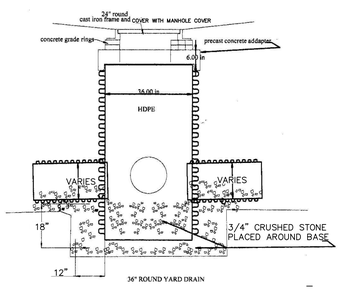

4 HDPE YARD DRAIN

Not to Scale

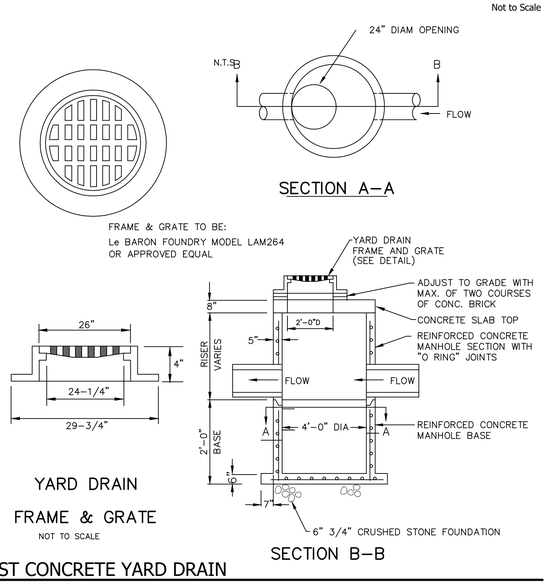

5 PRECAST CONCRETE YARD DRAIN

Not to Scale

ACCEPTABLE FILL MATERIALS: STORMTECH SC-310 CHAMBER SYSTEMS

	MATERIAL LOCATION	DESCRIPTION	AASHTO MATERIAL CLASSIFICATIONS	COMPACTION / DENSITY REQUIREMENT
D	**FINAL FILL:** FILL MATERIAL FOR LAYER 'D' STARTS FROM THE TOP OF THE 'C' LAYER TO THE BOTTOM OF FLEXIBLE PAVEMENT OR UNPAVED FINISHED GRADE ABOVE. NOTE THAT PAVEMENT SUBBASE MAY BE PART OF THE 'D' LAYER	ANY SOIL/ROCK MATERIALS, NATIVE SOILS, OR PER ENGINEER'S PLANS. CHECK PLANS FOR PAVEMENT SUBGRADE REQUIREMENTS.	N/A	PREPARE PER SITE DESIGN ENGINEER'S PLANS. PAVED INSTALLATIONS MAY HAVE STRINGENT MATERIAL AND PREPARATION REQUIREMENTS.
C	**INITIAL FILL:** FILL MATERIAL FOR LAYER 'C' STARTS FROM THE TOP OF THE EMBEDMENT STONE ('B' LAYER) TO 18" (450 mm) ABOVE THE TOP OF THE CHAMBER. NOTE THAT PAVEMENT SUBBASE MAY BE A PART OF THE 'C' LAYER.	GRANULAR WELL-GRADED SOIL/AGGREGATE MIXTURES, <35% FINES OR PROCESSED AGGREGATE. MOST PAVEMENT SUBBASE MATERIALS CAN BE USED IN LIEU OF THIS LAYER.	AASHTO M145[1] A-1, A-2-4, A-3 OR AASHTO M43[1] 3, 357, 4, 467, 5, 56, 57, 6, 67, 68, 7, 78, 8, 89, 9, 10	BEGIN COMPACTIONS AFTER 12" (300 mm) OF MATERIAL OVER THE CHAMBERS IS REACHED. COMPACT ADDITIONAL LAYERS IN 6" (150 mm) MAX LIFTS TO A MIN. 95% PROCTOR DENSITY FOR WELL GRADED MATERIAL AND 95% RELATIVE DENSITY FOR PROCESSED AGGREGATE MATERIALS. ROLLER GROSS VEHICLE WEIGHT NOT TO EXCEED 12,000 lbs (53 kN). DYNAMIC FORCE NOT TO EXCEED 20,000 lbs (89 kN).
B	**EMBEDMENT STONE:** FILL SURROUNDING THE CHAMBERS FROM THE FOUNDATION STONE ('A' LAYER) TO THE 'C' LAYER ABOVE.	CLEAN, CRUSHED, ANGULAR STONE	AASHTO M43[1] 3, 357, 4, 467, 5, 56, 57	NO COMPACTION REQUIRED.
A	**FOUNDATION STONE:** FILL BELOW CHAMBERS FROM THE SUBGRADE UP TO THE FOOT (BOTTOM) OF THE CHAMBER.	CLEAN, CRUSHED, ANGULAR STONE	AASHTO M43[1] 3, 357, 4, 467, 5, 56, 57	PLATE COMPACT OR ROLL TO ACHIEVE A FLAT SURFACE. [2 3]

PLEASE NOTE:
1. THE LISTED AASHTO DESIGNATIONS ARE FOR GRADATIONS ONLY. THE STONE MUST ALSO BE CLEAN, CRUSHED, ANGULAR. FOR EXAMPLE, A SPECIFICATION FOR #4 STONE WOULD STATE: "CLEAN, CRUSHED, ANGULAR NO. 4 (AASHTO M43) STONE".
2. STORMTECH COMPACTION REQUIREMENTS ARE MET FOR 'A' LOCATION MATERIALS WHEN PLACED AND COMPACTED IN 6" (150 mm) (MAX) LIFTS USING TWO FULL COVERAGES WITH A VIBRATORY COMPACTOR.
3. WHERE INFILTRATION SURFACES MAY BE COMPROMISED BY COMPACTION, FOR STANDARD DESIGN LOAD CONDITIONS, A FLAT SURFACE MAY BE ACHIEVED BY RAKING OR DRAGGING WITHOUT COMPACTION EQUIPMENT. FOR SPECIAL LOAD DESIGNS, CONTACT STORMTECH FOR COMPACTION REQUIREMENTS.

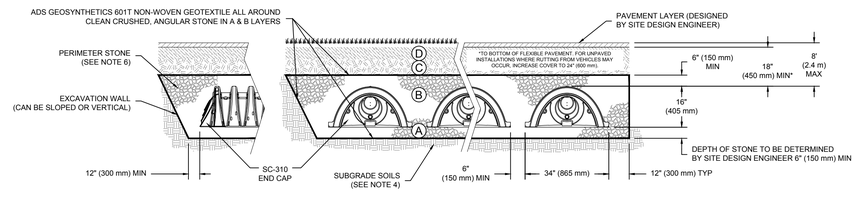

NOTES:

1. SC-310 CHAMBERS SHALL CONFORM TO THE REQUIREMENTS OF ASTM F2418 "STANDARD SPECIFICATION FOR POLYPROPYLENE (PP) CORRUGATED WALL STORMWATER COLLECTION CHAMBERS", OR ASTM F2922 "STANDARD SPECIFICATION FOR POLYETHYLENE (PE) CORRUGATED WALL STORMWATER COLLECTION CHAMBERS".
2. SC-310 CHAMBERS SHALL BE DESIGNED IN ACCORDANCE WITH ASTM F2787 "STANDARD PRACTICE FOR STRUCTURAL DESIGN OF THERMOPLASTIC CORRUGATED WALL STORMWATER COLLECTION CHAMBERS".
3. "ACCEPTABLE FILL MATERIALS" TABLE ABOVE PROVIDES MATERIAL LOCATIONS, DESCRIPTIONS, GRADATIONS, AND COMPACTION REQUIREMENTS FOR FOUNDATION, EMBEDMENT, AND FILL MATERIALS.
4. THE SITE DESIGN ENGINEER IS RESPONSIBLE FOR ASSESSING THE BEARING RESISTANCE (ALLOWABLE BEARING CAPACITY) OF THE SUBGRADE SOILS AND THE DEPTH OF FOUNDATION STONE WITH CONSIDERATION FOR THE RANGE OF EXPECTED SOIL MOISTURE CONDITIONS.
5. PERIMETER STONE MUST BE EXTENDED HORIZONTALLY TO THE EXCAVATION WALL FOR BOTH VERTICAL AND SLOPED EXCAVATION WALLS.
6. ONCE LAYER 'C' IS PLACED, ANY SOIL/MATERIAL CAN BE PLACED IN LAYER 'D' UP TO THE FINISHED GRADE. MOST PAVEMENT SUBBASE SOILS CAN BE USED TO REPLACE THE MATERIAL REQUIREMENTS OF LAYER 'C' OR 'D' AT THE SITE DESIGN ENGINEER'S DISCRETION.

6 UNDERGROUND STORMWATER CHAMBERS

Not to Scale

PROPERTY OWNER:
FOUR WOODS LLC
C/O JOHN J WOODCOCK III
89 SADDLEBACK DRIVE
SOUTH WINDSOR, CT 06074
APPLICANT:
SCANNELL PROPERTIES #644, LLC
294 GROVE LANE EAST
SUITE 140
WAYZATA, MN 55391
(763) 331-8851

Copyright © 2022 Design Professionals, Inc. - All Rights Reserved

design professionals
21 FIDELITY DRIVE
SUITE 301
SOUTH WINDSOR, CT 06074
860-291-8757 - T
860-291-8758 - F
www.designprofessionals.com
CIVIL & TRAFFIC ENGINEERS / LAND SURVEYORS
PLANNERS / LANDSCAPE ARCHITECTS

This plan is valid only if bearing the seal or stamp and original signature of the Professional Engineer, Land Surveyor or Landscape Architect.

Reproduction techniques used in the production of this plan can smear or shrink the paper. Scaling of this plan may not be accurate. Contact DPI, if additional information is required.

This plan and other plans prepared by Design Professionals, Inc. are the property of the firm and remain its property. The use of these plans by DPI's client is limited to the purpose for which they were prepared. Ownership and DPI's rights are not to be impaired by any conveyance, gift, or other means.

PREPARED FOR:
Scannell Properties #644, LLC
294 Grove Lane East
Suite 140
Wayzata, MN 55391
763-331-8851 T

PROJECT NO.	DATE	DRAWN BY:	CHECKED BY:
4670	3/30/2022	CHI/BPW	BPW

67 KENNEDY ROAD WAREHOUSE & DISTRIBUTION CENTER
352 SULLIVAN AVENUE, 67 & 68 KENNEDY ROAD
SOUTH WINDSOR, CONNECTICUT 06074
GIS NOs: 87300352, 49800067, & 49800068

REVISIONS

NO.	DATE		BY

DETAILS

SHEET
C-D5
SHEET 23 OF 24

File: C:\jobs\4670\Engineering\AutoCAD\4670 Details.dwg Layout: 23 C-D5 Plotted: 3/30/2022 12:29 PM Last Saved: 3/30/2022 12:02 PM Last Saved By: benwheeler

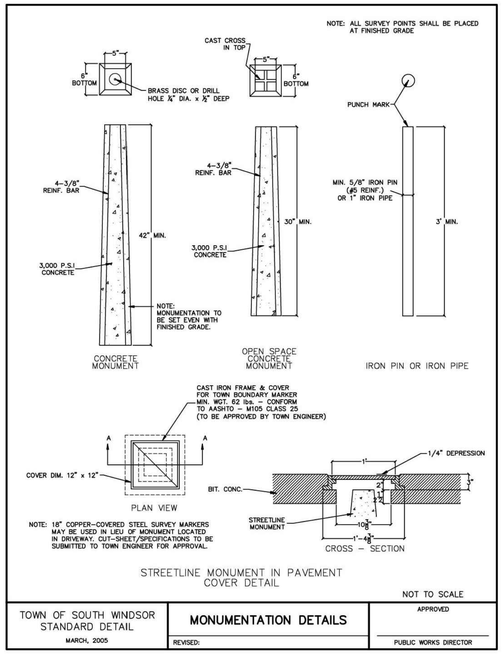

1 TOWN OF SOUTH WINDSOR MONUMENTATION DETAILS

Not to Scale

ALL MATERIALS ARE TO MEET CONN. D.O.T. SPECIFICATIONS FORM 816 AS AMENDED.

ALL UNDERGROUND UTILITIES INCLUDING SERVICE LATERALS, SHALL BE INSTALLED PRIOR TO PLACEMENT OF BINDER COURSE.

MAINTAIN 18" VERTICAL OR 10' HORIZONTAL SEPARATION DISTANCE BETWEEN SANITARY SEWER AND WATER MAIN.

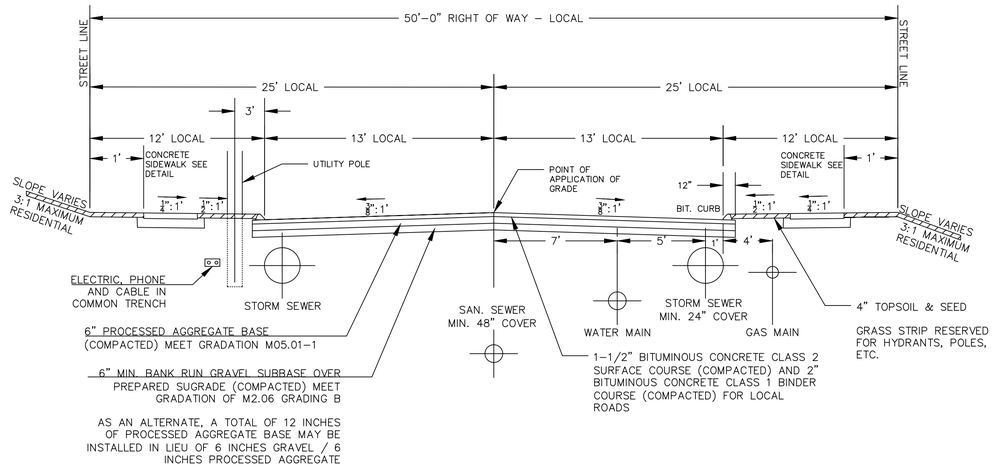

ACTUAL DEPTHS & MATERIALS SHOULD BE BASED ON A PAVEMENT DESIGN FOR EACH ROAD.

DESIGN TO BE SUBMITTED TO AND APPROVED BY TOWN ENGINEER.

2 TYPICAL ROADWAY SECTION - LOCAL ROADS

Not to Scale

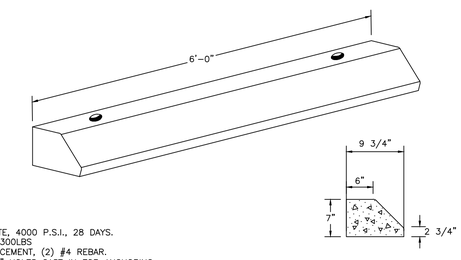

NOTES:

1. CONCRETE, 4000 P.S.I., 28 DAYS.
2. WEIGHT 300LBS
3. REINFORCEMENT, (2) #4 REBAR.
4. (2) 3/4" HOLES CAST IN FOR ANCHORING.

3 PRECAST CONCRETE WHEELSTOP

Not to Scale

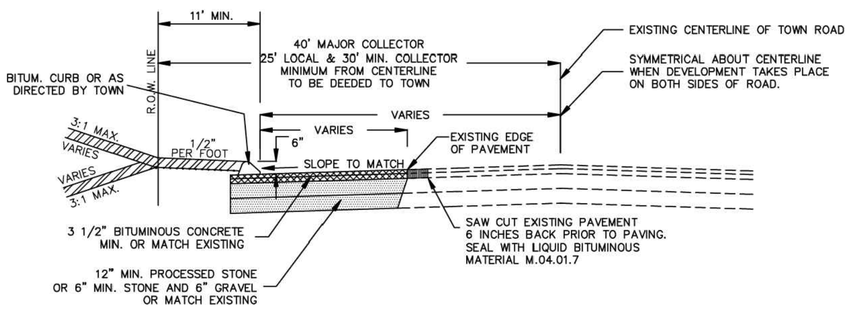

4 IMPROVEMENT TO EXISTING TOWN ROADWAY SECTION

Not to Scale

PROPERTY OWNER:
FOUR WOODS LLC
C/O JOHN J WOODCOCK III
89 SADDLEBACK DRIVE
SOUTH WINDSOR, CT 06074

APPLICANT:
SCANNELL PROPERTIES #644, LLC
294 GROVE LANE EAST
SUITE 140
WAYZATA, MN 55391
(763) 331-8851

Copyright © 2022 Design Professionals, Inc. - All Rights Reserved

21 FERNEY DRIVE
P.O. BOX 1967
SOUTH WINDSOR, CT 06074
860-291-8755 - T
860-291-8757 - F
www.designprofessionals.com
Design Professionals
CIVIL & TRAFFIC ENGINEERS / LAND SURVEYORS
PLANNERS / LANDSCAPE ARCHITECTS

• The plans, specs and other data prepared by Design Professionals, Inc. for this project are instruments of service and shall remain the property of the firm. The use of these items by OWN, PROPERTY OWNER, or any other party for any purpose other than the intended project, and OR Additional use of OWN items is prohibited without the written consent of DPI.
• Reproduction techniques used in the production of the plan, can stretch or shrink the paper. Scale of the drawing shown may not be accurate. Contact DPI, if dimensional information is required.

PREPARED FOR:
Scannell Properties #644, LLC
294 Grove Lane East
Suite 140
Wayzata, MN 55391
763-331-8851 T

PROJECT NO. 4670
DATE: 3/30/2022
DRAWN BY: CHH/BPW
CHECKED BY: BPW

67 KENNEDY ROAD
WAREHOUSE & DISTRIBUTION CENTER
352 SULLIVAN AVENUE, 67 & 68 KENNEDY ROAD
SOUTH WINDSOR, CONNECTICUT 06074
GIS NOs. 87300352, 49800067, & 49800068

REVISIONS

NO.	DATE		BY

DETAILS

SHEET
C-D6
SHEET 24 OF 24

File: C:\jobs\4670\Engineering\AutoCAD\4670 Details.dwg Layout: 24 C-D6 Plotted: 3/30/2022 12:28 PM Last Saved 3/30/2022 12:02 PM Last Saved By: benwheeler

LEGEND

EXISTING	DESCRIPTION
BORINGS	
TP	BORING / TEST PIT LOCATION
COMMUNICATION	
— C_X —	OVERHEAD COMM. LINES (CABLE, TEL, ETC.)
— — — C_X — — — C_X —	APPROX. UNDERGROUND COMMUNICATION LINES
CONTROL POINTS	
	BENCHMARK
DOMESTIC WATER	
— — — W_X — — — W_X —	APPROX. WATER MAIN
— — — WS_X — — — WS_X —	APPROX. WATER SERVICE
W_V	WATER VALVE
	FIRE HYDRANT
LIGHTING	
	POLE MOUNTED LIGHT
NATURAL GAS	
G_V	GAS VALVE
— — — G_X — — — G_X —	APPROX. GAS MAIN
— — — GS_X — — — GS_X —	APPROX. GAS SERVICE LINE
POWER	
— EO_X —	ELECTRICAL LINES, OVERHEAD
— — — EU_X — — — EU_X —	APPROX. ELECTRICAL LINES, UNDERGROUND
	UTILITY POLE
	UTILITY POLE WITH LIGHT
	UTILITY POLE WITH TRANSFORMER
PROPERTY	
	PROPERTY LINE
	EASEMENT LINE
	IRON PIPE
	IRON ROD
	MONUMENT
ROADS	
	GUARD RAIL
OR	SIGN
SITE FEATURES	
	EDGE OF WATER
— X — X — X — X —	BARBED WIRE FENCE
	CHAIN LINK FENCE
	RAIL FENCE
	STOCKADE FENCE
	WIRE FENCE
	STONE WALL
OR	TREE
	TREE LINE
SANITARY SEWER	
— — — S_X — — — S_X —	APPROX. SANITARY SEWER MAIN
— — — SS_X — — — SS_X —	APPROX. SANITARY SEWER SERVICE LINE
Ⓢ	SANITARY SEWER MANHOLE
	SEWER CLEAN OUT
STORM SEWER	
	APPROX. STORM DRAIN PIPE
Ⓓ	STORM DRAIN MANHOLE
	CURB INLET
	CATCH BASIN
TOPOGRAPHY	
— — — 95 — — —	CONTOUR
×61.95	SPOT ELEVATION
WETLANDS	
	WETLANDS LINE

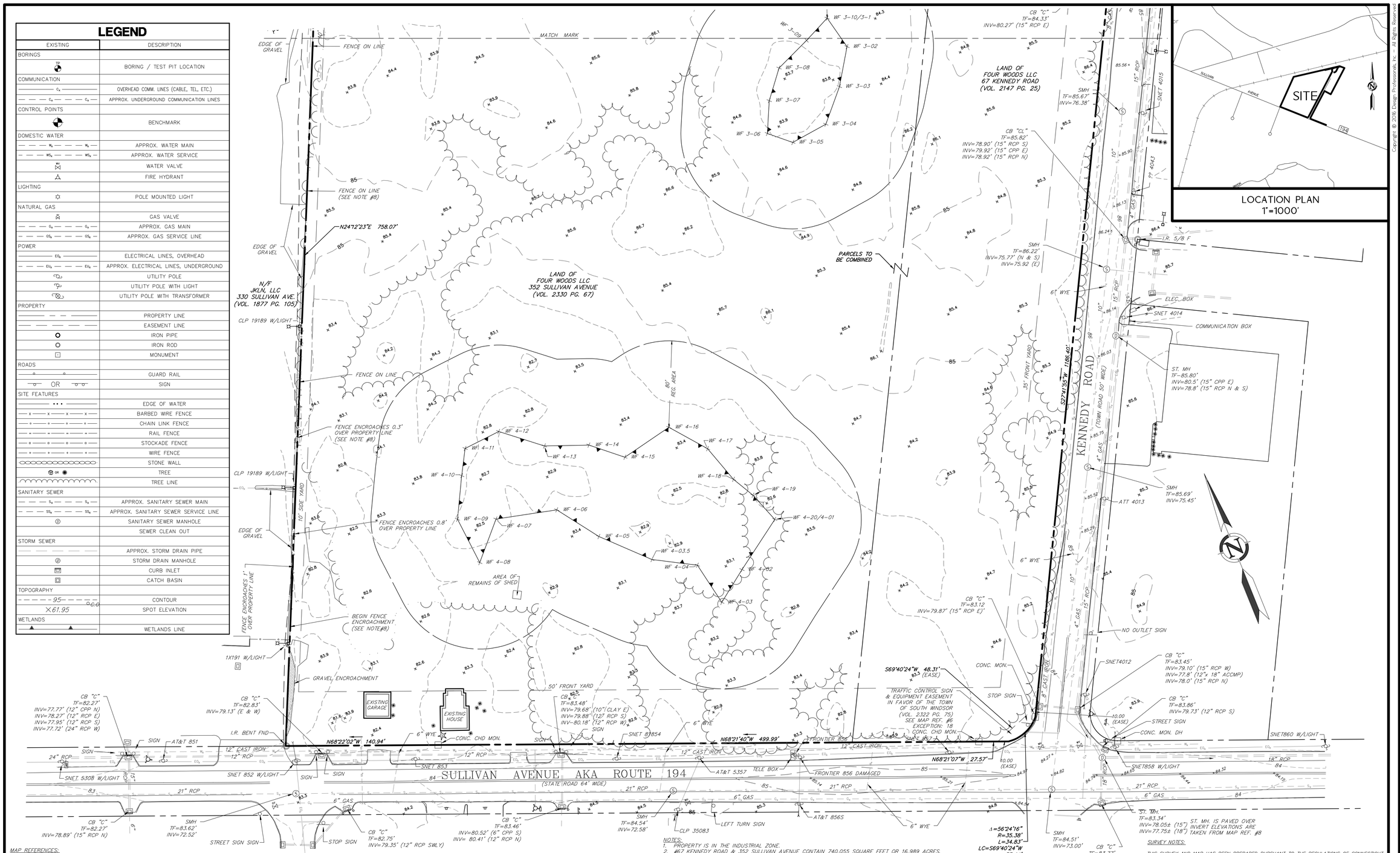

MAP REFERENCES:

1. STATUTORY DIVISION PLAN ALTA REALTY COMPANY LLC 300 RYE STREET SOUTH WINDSOR, CONNECTICUT DATED: 5–12–11 REV. THROUGH 12–21–12 SCALE: 1"=100' BY: DESIGN PROFESSIONALS, INC.
2. WETLANDS MAP PREPARED FOR JOHN J. WOODCOCK SULLIVAN AVENUE SOUTH WINDSOR, CONNECTICUT DATED: 2–2–05 SCALE: 1"=80' BY: DESIGN PROFESSIONALS, INC.
3. RESUBDIVISION PROPERTY OF MILTON & ELEANOR BAYER LOT 3 AND ALSO PROPERTY OF JOHN WOODCOCK J. LOTS 1, 2, & 4 KENNEDY ROAD SOUTH WINDSOR, CT DATED: 11–12–87 SCALE: 1"=40' BY: LUCEK ENGINEERING ASSOC. INC.
4. PROPERTY OF MARTIN F. MCGRATH, ET AL. SOUTH WINDSOR, CONN. SCALE: 1"=100' DATED 8–30–56 REV. 11–25–56 BY: CECIL W. BROOKS.
5. LOCATION OF RIGHT OF WAY OF THE NORTHERN CONNECTICUT POWER COMPANY ACROSS THE PROPERTY OF AHERN BROS. INC. TOWN OF SOUTH WINDSOR SCALE: 1"=200' DATED: FEB. 1933
5. LOCATION OF RIGHT OF WAY OF THE NORTHERN CONNECTICUT POWER COMPANY ACROSS THE PROPERTY OF THOMAS AND BRIDGET CONNERS TOWN OF SOUTH WINDSOR SCALE: 1"=200' DATED: FEB. 1933
6. BOUNDARY & EASEMENT PLAN PREPARED FOR MCSHANE CONSTRUCTION COMPANY & THE TOWN OF SOUTH WINDSOR A PORTION OF LAND OF FOUR WOODS, LLC BY: J.R. RUSSO & ASSOC., DATED: 1–25–13
7. CONNECTICUT STATE HIGHWAY DEPARTMENT RIGHT OF WAY MAP TOWN OF SOUTH WINDSOR EAST WINDSOR HILL – WAPPING ROAD FROM THE HARTFORD–SPRINGFIELD ROAD SOUTHEASTERLY ABOUT 12,500 FEET ROUTE NO. 194 SCALE 1"=40' DATED 8–31–31 NUMBER 132–02 SHT NO. 2 OF 4.
8. AS–BUILT PLAN FEDEX GROUND 40 KENNEDY ROAD SOUTH WINDSOR, CT BY: J.R. RUSSO & ASSOC., LLC DATED: 11–15–12 REV. THROUGH 10–12–15 SCALE: 1"=40'

NOTES:

1. PROPERTY IS IN THE INDUSTRIAL ZONE.
2. #67 KENNEDY ROAD & 352 SULLIVAN AVENUE CONTAIN 740,055 SQUARE FEET OR 16.989 ACRES. #68 KENNEDY ROAD CONTAINS 105,480 SQUARE FEET OR 2.421 ACRES
3. HORIZONTAL DATUM IS BASED ON NAD83. VERTICAL DATUM IS BASED ON NAVD88.
4. BUILDINGS ON BOTH PARCELS ARE EXISTING NON–CONFORMING TO FRONT YARD SETBACKS.
5. PROPERTY DOES NOT FALL WITHIN THE LIMITS OF A SPECIAL FLOOD HAZARD ZONE AS DEPICTED ON: "FIRM FLOOD INSURANCE RATE MAP NUMBER 09003C0337F TOWN OF SOUTH WINDSOR CONNECTICUT EFFECTIVE DATE: 9–26–2008 FEDERAL EMERGENCY MANAGEMENT AGENCY FEDERAL INSURANCE ADMINISTRATION.
6. UNDERGROUND UTILITY, STRUCTURE AND FACILITY LOCATIONS DEPICTED AND NOTED HEREON HAVE BEEN COMPILED, IN PART, FROM RECORD MAPPING SUPPLIED BY THE RESPECTIVE UTILITY COMPANIES OR GOVERNMENTAL AGENCIES, FROM PAROL TESTIMONY AND FROM OTHER SOURCES. THESE LOCATIONS MUST BE CONSIDERED AS APPROXIMATE IN NATURE. ADDITIONALLY, OTHER SUCH FEATURES MAY EXIST ON THE SITE, THE EXISTENCE OF WHICH ARE UNKNOWN TO DESIGN PROFESSIONALS, INC. THE SIZE, LOCATION AND EXISTENCE OF ALL SUCH FEATURES MUST BE FIELD DETERMINED AND VERIFIED BY THE APPROPRIATE AUTHORITIES PRIOR TO CONSTRUCTION.
7. CONTRACTOR SHALL CONTACT "CALL BEFORE YOU DIG" FOR UNDERGROUND UTILITY MARKING AT LEAST TWO FULL WORKING DAYS PRIOR TO START OF CONSTRUCTION: 1–800–922–4455 OR WWW.CBYD.COM.
8. FENCE ALONG WESTERLY PROPERTY LINE ON LAND OF JKLN, LLC IS IN POOR CONDITION. THE LINE DEPICTED HEREON IS ALONG THE BASE OF THE EXISTING FENCE. THE TOP OF THE FENCE LEANS WESTERLY 1–4 FEET ONTO LAND OF FOUR WOODS LLC.
9. TOPOGRAPHIC INFORMATION FOR THIS PROJECT WAS PROVIDED BY GOLDEN AERIAL SURVEYS BASED ON THE STATE OF CONNECTICUT AERIAL IMAGERY, OBTAINED IN 2016. THE TOPOGRAPHIC INFORMATION FOR SULLIVAN AVENUE & KENNEDY ROAD WAS OBTAINED BY DESIGN PROFESSIONALS, INC. BY CONVENTIONAL SURVEY TECHNIQUES.
10 INLAND WETLANDS DEPICTED HEREON WERE FIELD DELINEATED BY ALL–POINTS TECHNOLOGY CORPORATION ON 8/17/21 AND WERE FIELD LOCATED BY DESIGN PROFESSIONALS, INC.

SURVEY NOTES:

THIS SURVEY AND MAP HAS BEEN PREPARED PURSUANT TO THE REGULATIONS OF CONNECTICUT STATE AGENCIES SECTIONS 20–300b–1 THRU 20–300b–20 AND THE "STANDARDS SUGGESTED METHODS AND PROCEDURES FOR SURVEYS AND MAPS IN THE STATE OF CONNECTICUT" AS ADOPTED BY THE CONNECTICUT ASSOCIATION OF LAND SURVEYORS, INC. ON AUGUST 29, 2019.

- TYPE OF SURVEY IS A PROPERTY & TOPOGRAPHIC SURVEY AND IS INTENDED TO DEPICT THE LOCATION OF EXISTING CONDITIONS RELATIVE TO PROPERTY LINES.
- THIS IS A INDEPENDENT RESURVEY BASED ON THE REFERENCED MAPS & DEEDS.
- HORIZONTAL ACCURACY MEETS CLASS A–2 STANDARDS. VERTICAL ACCURACY MEETS CLASS V–2 STANDARDS. TOPOGRAPHICAL ACCURACY MEETS CLASS T–2 STANDARDS WITH THE PAVED AREAS OF SULLIVAN AND KENNEDY ROADS AND T–3 STANDARDS FOR THE REMAINING SITE.

TO MY KNOWLEDGE AND BELIEF, THIS MAP IS SUBSTANTIALLY CORRECT AS NOTED HEREON.

12327
LAWRENCE R. GEISSLER, JR., L.S. LIC. NO.

design professionals
CIVIL & TRAFFIC ENGINEERS / PLANNERS / SURVEYORS
GIS ANALYSTS / LANDSCAPE ARCHITECTS
21 JEFFREY DRIVE
P.O. BOX 1307
SOUTH WINDSOR, CT 06074
860-291-8755 – T
860-528-3537 – F
www.designprofessionalsinc.com

Copyright © 2013 Design Professionals, Inc – All Rights Reserved

"The data in this plan/map/drawing is the result of a survey or other information of the Professional Engineer, Land Surveyor or Architect whose seal is affixed.
• Existing utility locations depicted hereon are based on available information and should be field verified prior to construction.
• Contours, elevations, and spot elevations depicted hereon are based on aerial or field survey information.
• The data and other items presented by Design Professionals, Inc. (DPI) are instruments of service and shall remain the property of DPI. Reproduction or modification of this data/map/drawing without the written consent of DPI is prohibited and may violate copyright laws of the United States of America and Chapter 523 of the General Statutes of Connecticut."

PREPARED FOR:
DANIEL MADRIGAL
SCANNELL PROPERTIES
294 GROVE LANE EAST
SUITE 140
WAYZATA, MN 55391

LAND OF FOUR WOODS LLC

67 & 68 KENNEDY ROAD & 352 SULLIVAN AVE.
SOUTH WINDSOR, CONNECTICUT

REVISIONS

NO.	DATE		BY
1	2-9-22	ADD 168 KENNEDY ROAD	BDC

PROJECT NO. 4670
DATE 5-20-21
DRAWN BY: ---
CHKD BY: BDC
REVISED BY: LRG

PROPERTY & TOPOGRAPHIC SURVEY

SCALE: 0 20' 40' 80'
1" = 40'

SHEET
V-1

File: C:\jobs\4670\Survey\Survey-Base\4670 Survey Base.dwg Layout: V-1 Plotted: 3/30/2022 10:11 AM Last Saved: 3/29/2022 9:46 PM Last Saved By: DanielJameson

MAP REFERENCES:

1. STATUTORY DIVISION PLAN ALTA REALTY COMPANY LLC 300 RYE STREET SOUTH WINDSOR, CONNECTICUT DATED: 5–12–11 REV. THROUGH 12–21–12 SCALE: 1"=100' BY: DESIGN PROFESSIONALS, INC
2. WETLANDS MAP PREPARED FOR JOHN J. WOODCOCK SULLIVAN AVENUE SOUTH WINDSOR, CONNECTICUT DATED: 2–2–05 SCALE: 1"=80' BY: DESIGN PROFESSIONALS, INC
3. RESUBDIVISION PROPERTY OF MILTON & ELEANOR BAYER LOT 3 AND ALSO PROPERTY OF JOHN WOODCOCK J. LOTS 1, 2, & 4 KENNEDY ROAD SOUTH WINDSOR, CT DATED: 11–12–87 SCALE: 1"=40' BY: LUCEK ENGINEERING ASSOC. INC.
4. PROPERTY OF MARTIN F. MCGRATH, ET AL. SOUTH WINDSOR, CONN. SCALE: 1"=100' DATED 8–30–56 REV. 11–25–56 BY: CECIL W. BROOKS
5. LOCATION OF RIGHT OF WAY OF THE NORTHERN CONNECTICUT POWER COMPANY ACROSS THE PROPERTY OF AHERN BROS. INC. TOWN OF SOUTH WINDSOR SCALE: 1"=200' DATED: FEB. 1933
5. LOCATION OF RIGHT OF WAY OF THE NORTHERN CONNECTICUT POWER COMPANY ACROSS THE PROPERTY OF THOMAS AND BRIDGET CONNERS TOWN OF SOUTH WINDSOR SCALE: 1"=200' DATED: FEB. 1933
6. BOUNDARY & EASEMENT PLAN PREPARED FOR MCSHANE CONSTRUCTION COMPANY & THE TOWN OF SOUTH WINDSOR A PORTION OF LAND OF FOUR WOODS, LLC BY: J.R. RUSSO & ASSOC., DATED: 1–25–13
7. CONNECTICUT STATE HIGHWAY DEPARTMENT RIGHT OF WAY MAP TOWN OF SOUTH WINDSOR EAST WINDSOR HILL – WAPPING ROAD FROM THE HARTFORD–SPRINGFIELD ROAD SOUTHEASTERLY ABOUT 12,500 FEET ROUTE NO. 194 SCALE 1"=40' DATED 8–31–33 NUMBER 132–02 SHT NO. 2 OF 4
8. AS–BUILT PLAN FEDEX GROUND 40 KENNEDY ROAD SOUTH WINDSOR, CT BY: J.R. RUSSO & ASSOC., LLC DATED; 11–15–12 REV. THROUGH 10–12–15 SCALE: 1"=40'

NOTES:

1. PROPERTY IS IN THE INDUSTRIAL ZONE.
2. #67 KENNEDY ROAD & 352 SULLIVAN AVENUE CONTAIN 740,055 SQUARE FEET OR 16.989 ACRES. #68 KENNEDY ROAD CONTAINS 105,480 SQUARE FEET OR 2.421 ACRES
3. HORIZONTAL DATUM IS BASED ON NAD83. VERTICAL DATUM IS BASED ON NAVD88.
4. BUILDINGS ON BOTH PARCELS ARE EXISTING NON–CONFORMING TO FRONT YARD SETBACKS.
5. PROPERTY DOES NOT FALL WITHIN THE LIMITS OF A SPECIAL FLOOD HAZARD ZONE AS DEPICTED ON: "FIRM FLOOD INSURANCE RATE MAP NUMBER 09003C0377F" TOWN OF SOUTH WINDSOR CONNECTICUT EFFECTIVE DATE: 9–26–2008 FEDERAL EMERGENCY MANAGEMENT AGENCY FEDERAL INSURANCE ADMINISTRATION.
6. UNDERGROUND UTILITY, STRUCTURE AND FACILITY LOCATIONS DEPICTED AND NOTED HEREON HAVE BEEN COMPILED, IN PART, FROM RECORD MAPPING SUPPLIED BY THE RESPECTIVE UTILITY COMPANIES OR GOVERNMENTAL AGENCIES, FROM PAROL TESTIMONY AND FROM OTHER SOURCES. THESE LOCATIONS MUST BE CONSIDERED AS APPROXIMATE IN NATURE. ADDITIONALLY, OTHER SUCH FEATURES MAY EXIST ON THE SITE, THE EXISTENCE OF WHICH ARE UNKNOWN TO DESIGN PROFESSIONALS, INC. THE SIZE, LOCATION AND EXISTENCE OF ALL SUCH FEATURES MUST BE FIELD DETERMINED AND VERIFIED BY THE APPROPRIATE AUTHORITIES PRIOR TO CONSTRUCTION.
7. CONTRACTOR SHALL CONTACT "CALL BEFORE YOU DIG" FOR UNDERGROUND UTILITY MARKING AT LEAST TWO FULL WORKING DAYS PRIOR TO START OF CONSTRUCTION: 1–800–922–4455 OR WWW.CBYD.COM.
8. FENCE ALONG WESTERLY PROPERTY LINE ON LAND OF J&LN, LLC IS IN POOR CONDITION. THE LINE DEPICTED HEREON IS ALONG THE BASE OF THE EXISTING FENCE. THE TOP OF THE FENCE LEANS WESTERLY 1–4 FEET ONTO LAND OF FOUR WOODS LLC.
9. TOPOGRAPHIC INFORMATION FOR THIS PROJECT WAS PROVIDED BY GOLDEN AERIAL SURVEYS BASED ON THE STATE OF CONNECTICUT AERIAL IMAGERY, OBTAINED IN 2016. THE TOPOGRAPHIC INFORMATION FOR SULLIVAN AVENUE & KENNEDY ROAD WAS OBTAINED BY DESIGN PROFESSIONALS, INC. BY CONVENTIONAL SURVEY TECHNIQUES.
10 INLAND WETLANDS DEPICTED HEREON WERE FIELD DELINEATED BY ALL–POINTS TECHNOLOGY CORPORATION ON 8/17/21 AND WERE FIELD LOCATED BY DESIGN PROFESSIONALS, INC.

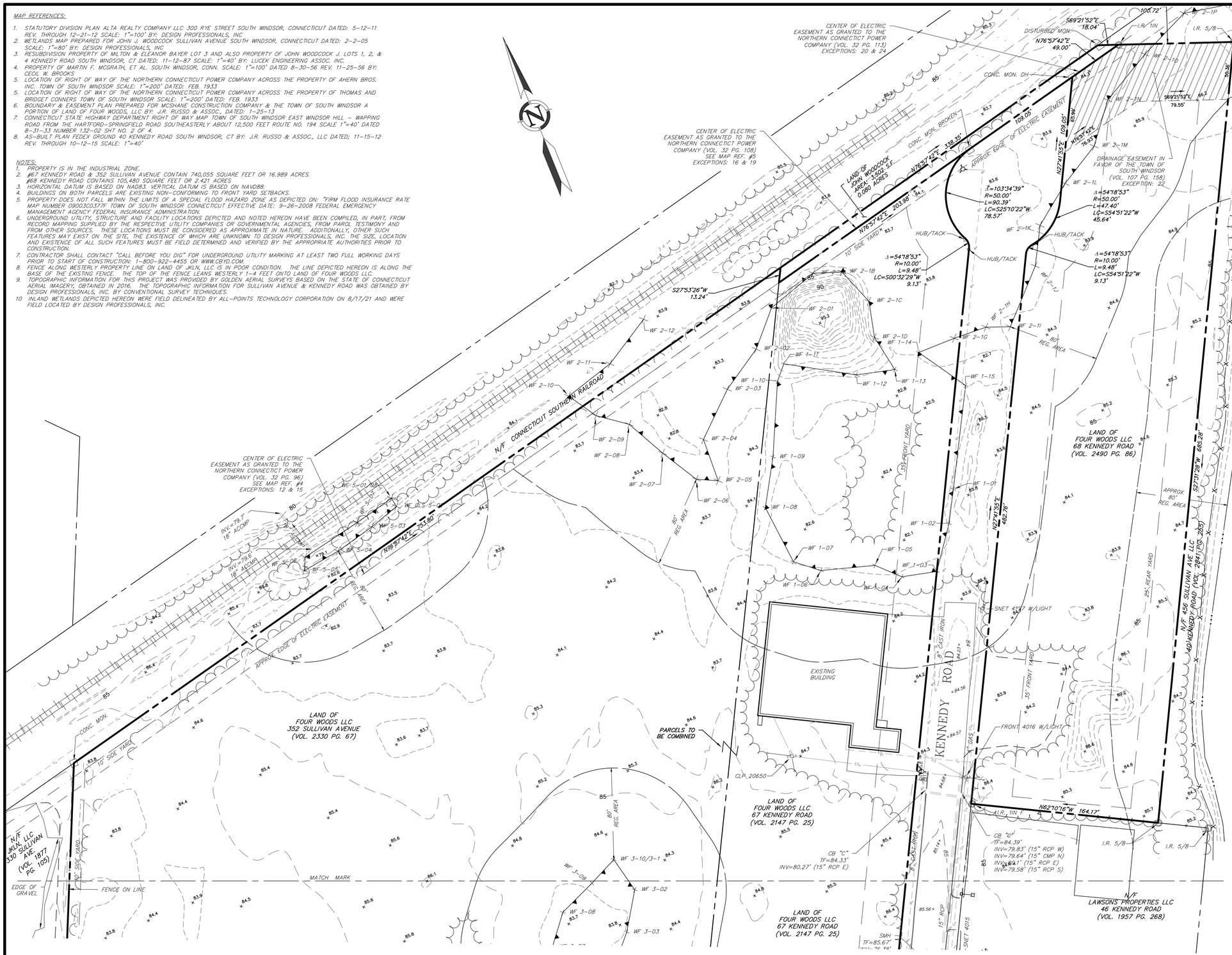

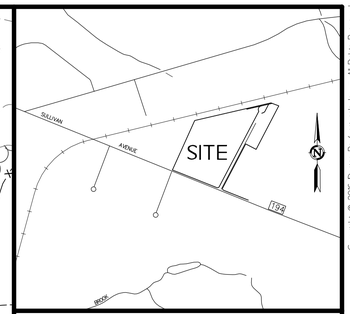

LOCATION PLAN
1"=1000'

SEE SHEET V-1
FOR LEGEND

SURVEY NOTES:

THIS SURVEY AND MAP HAS BEEN PREPARED PURSUANT TO THE REGULATIONS OF CONNECTICUT STATE AGENCIES SECTIONS 20–300b–1 THRU 20–300b–20 AND THE "STANDARDS SUGGESTED METHODS AND PROCEDURES FOR SURVEYS AND MAPS IN THE STATE OF CONNECTICUT" AS ADOPTED BY THE CONNECTICUT ASSOCIATION OF LAND SURVEYORS, INC. ON AUGUST 29, 2019.

- TYPE OF SURVEY IS A PROPERTY & TOPOGRAPHIC SURVEY AND IS INTENDED TO DEPICT THE LOCATION OF EXISTING CONDITIONS RELATIVE TO PROPERTY LINES.
- THIS IS A INDEPENDENT RESURVEY BASED ON THE REFERENCED MAPS.
- HORIZONTAL ACCURACY MEETS CLASS A–2 STANDARDS. VERTICAL ACCURACY MEETS CLASS V–2 STANDARDS. TOPOGRAPHICAL ACCURACY MEETS CLASS T–2 STANDARDS WITH THE PAVED AREAS OF SULLIVAN AND KENNEDY ROADS AND T–3 STANDARDS FOR THE REMAINING SITE.

TO MY KNOWLEDGE AND BELIEF, THIS MAP IS SUBSTANTIALLY CORRECT AS NOTED HEREON.

LAWRENCE R. GEISSLER, JR., L.S. — 12327 LIC. NO.

Copyright © 2018 Design Professionals, Inc — All Rights Reserved

21 JEFFREY DRIVE
STE B, SUITE 107
SOUTH WINDSOR, CT 06074
860-291-8755 – T
860-528-7837 – F
www.designprofessionalsinc.com
design professionals
CIVIL & TRAFFIC ENGINEERS / PLANNERS / SURVEYORS
GIS ANALYSTS / LANDSCAPE ARCHITECTS

1. The data in this map is from the best sources available at the Professional Engineer, Land Surveyor's discretion.
2. Locating utility locations depicted hereon are based on available information and should be field verified prior to construction.
3. This map is intended to be used for planning and zoning purposes only. It is not to be used for conveyance or other purposes. Locating of this drawing may be required by the Professional Engineer, Land Surveyor or Town Staff.
4. The data and other items contained by Design Professionals, Inc. GIS are a compilation of various and various to property. The information is not to be used for any purpose other than that for which it was originally intended. Design Professionals, Inc. and its GIS Consultant, GIS Services, Inc. assumes no responsibility for any other use.

PREPARED FOR:
DANIEL MADRIGAL
SCANNELL PROPERTIES
294 GROVE LANE EAST
SUITE 140
WAYZATA, MN 55391

LAND OF FOUR WOODS LLC
67 & 68 KENNEDY ROAD & 352 SULLIVAN AVE
SOUTH WINDSOR, CONNECTICUT

NO.	DATE	REVISIONS	BY
1	2-9-22	ADD #68 KENNEDY ROAD	BDC

PROJECT NO. 4670
DATE: 9-20-21
DESIGNED BY: ---
DRAWN BY: BDC
RECORDED BY: LRC

PROPERTY & TOPOGRAPHIC SURVEY

SCALE: 1" = 40' — 0 20' 40' 80'

SHEET
V-2

File: C:\jobs\4670\Survey\Survey-Base\4670 Survey Baseline Layout V-2 Plotted 3/30/2022 10:11 AM Last Saved 3/29/2022 9:46 PM Last Saved By: DanielJameson

LEGEND

EXISTING	DESCRIPTION
BORINGS	
TP	BORING / TEST PIT LOCATION
COMMUNICATION	
C_x	OVERHEAD COMM. LINES (CABLE, TEL, ETC.)
C_x — C_x	APPROX. UNDERGROUND COMMUNICATION LINES
CONTROL POINTS	
	BENCHMARK
DOMESTIC WATER	
W_x — W_x	APPROX. WATER MAIN
WS_x — WS_x	APPROX. WATER SERVICE
WV	WATER VALVE
	FIRE HYDRANT
LIGHTING	
	POLE MOUNTED LIGHT
NATURAL GAS	
GV	GAS VALVE
G_x — G_x	APPROX. GAS MAIN
GS_x — GS_x	APPROX. GAS SERVICE LINE
POWER	
EO_x	ELECTRICAL LINES, OVERHEAD
EU_x — EU_x	APPROX. ELECTRICAL LINES, UNDERGROUND
	UTILITY POLE
	UTILITY POLE WITH LIGHT
	UTILITY POLE WITH TRANSFORMER
PROPERTY	
	PROPERTY LINE
	EASEMENT LINE
	IRON PIPE
	IRON ROD
	MONUMENT
ROADS	
	GUARD RAIL
OR	SIGN
SITE FEATURES	
	EDGE OF WATER
x — x — x — x	BARBED WIRE FENCE
o — o — o — o	CHAIN LINK FENCE
= — = — = — =	RAIL FENCE
o — o — o — o	STOCKADE FENCE
+ — + — + — +	WIRE FENCE
	STONE WALL
OR	TREE
	TREE LINE
SANITARY SEWER	
S_x — S_x	APPROX. SANITARY SEWER MAIN
SS_x — SS_x	APPROX. SANITARY SEWER SERVICE LINE
S	SANITARY SEWER MANHOLE
	SEWER CLEAN OUT
STORM SEWER	
	APPROX. STORM DRAIN PIPE
D	STORM DRAIN MANHOLE
	CURB INLET
	CATCH BASIN
TOPOGRAPHY	
95	CONTOUR
×61.95	SPOT ELEVATION
WETLANDS	
C.O.	WETLANDS LINE

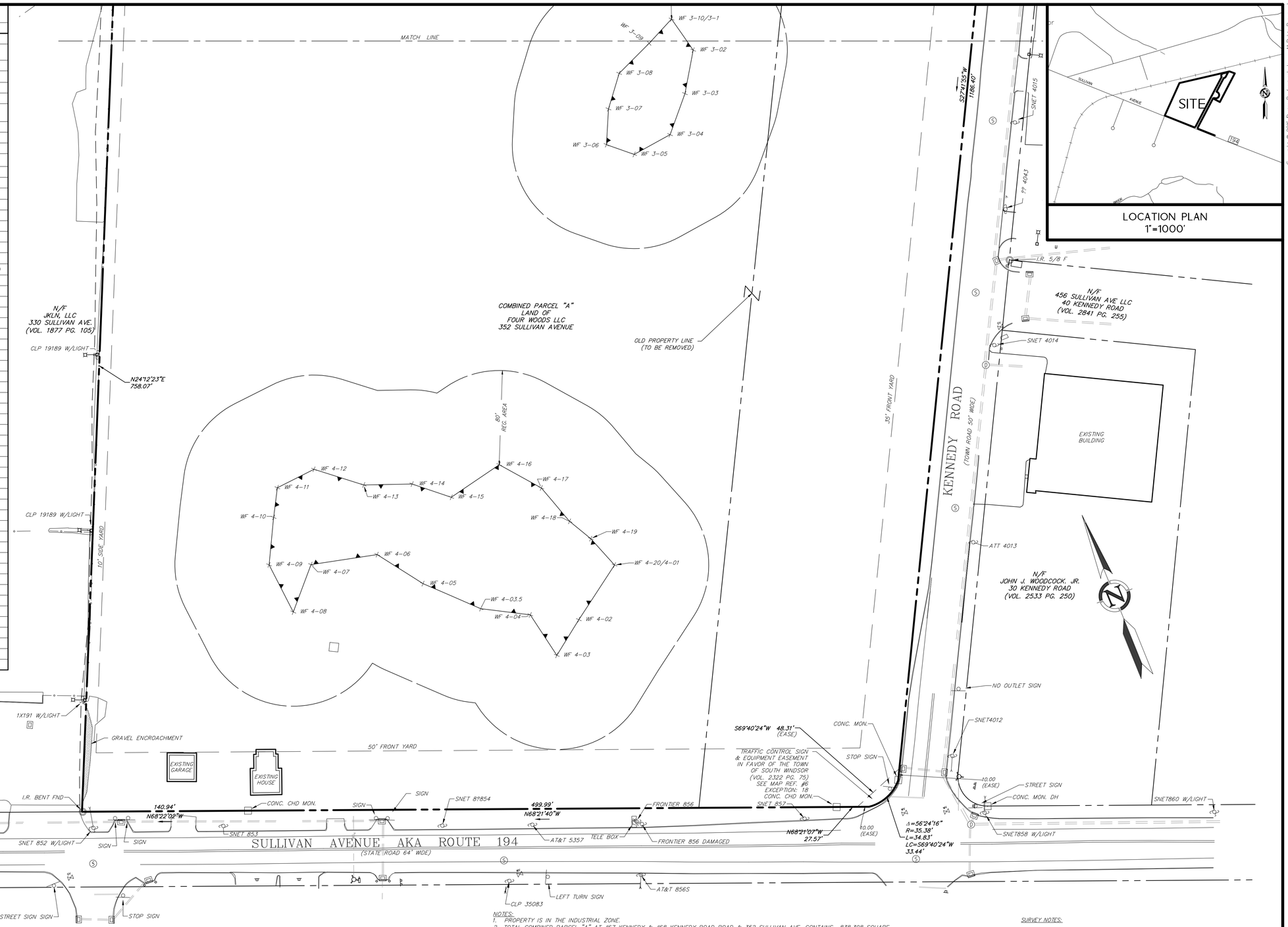

LOCATION PLAN
1"=1000'

MAP REFERENCES:

1. PROPERTY AND TOPOGRAPHIC SURVEY LAND OF FOUR WOODS LLC., 67 & 68 KENNEDY ROAD AND 352 SULLIVAN AVENUE PREPARED FOR DANIEL MADRIGAL SCANNELL PROPERTIES, SOUTH WINDSOR, CONNECTICUT, SCALE: 1"=40', DATE: 09-20-21, REVISED ON 02-09-22. PREPARED BY DESIGN PROFESSIONALS, INC

NOTES:

1. PROPERTY IS IN THE INDUSTRIAL ZONE.
2. TOTAL COMBINED PARCEL "A" AT #67 KENNEDY & #68 KENNEDY ROAD ROAD & 352 SULLIVAN AVE. CONTAINS 838,308 SQUARE FEET OR 19.245 ACRES
3. HORIZONTAL DATUM IS BASED ON NAD83.
4. BUILDINGS ON COMBINED PARCEL "A" ARE EXISTING NON-CONFORMING TO FRONT YARD SETBACKS.
5. PROPERTY DOES NOT FALL WITHIN THE LIMITS OF A SPECIAL FLOOD HAZARD ZONE AS DEPICTED ON: "FIRM FLOOD INSURANCE RATE MAP NUMBER 09003C0377F TOWN OF SOUTH WINDSOR CONNECTICUT EFFECTIVE DATE: 9-26-2008 FEDERAL EMERGENCY MANAGEMENT AGENCY FEDERAL INSURANCE ADMINISTRATION.
6. UNDERGROUND UTILITY, STRUCTURE AND FACILITY LOCATIONS DEPICTED AND NOTED HEREON HAVE BEEN COMPILED, IN PART, FROM RECORD MAPPING SUPPLIED BY THE RESPECTIVE UTILITY COMPANIES OR GOVERNMENTAL AGENCIES, FROM PAROL TESTIMONY AND FROM OTHER SOURCES. THESE LOCATIONS MUST BE CONSIDERED AS APPROXIMATE IN NATURE. ADDITIONALLY, OTHER SUCH FEATURES MAY EXIST ON THE SITE, THE EXISTENCE OF WHICH ARE UNKNOWN TO DESIGN PROFESSIONALS, INC. THE SIZE, LOCATION AND EXISTENCE OF ALL SUCH FEATURES MUST BE FIELD DETERMINED AND VERIFIED BY THE APPROPRIATE AUTHORITIES PRIOR TO CONSTRUCTION.
7. CONTRACTOR SHALL CONTACT "CALL BEFORE YOU DIG" FOR UNDERGROUND UTILITY MARKING AT LEAST TWO FULL WORKING DAYS PRIOR TO START OF CONSTRUCTION: 1-800-922-4455 OR WWW.CBYD.COM.
8. FENCE ALONG WESTERLY PROPERTY LINE ON LAND OF JKLN, LLC IS IN POOR CONDITION. THE LINE DEPICTED HEREON IS ALONG THE BASE OF THE EXISTING FENCE. THE TOP OF THE FENCE LEANS WESTERLY 1-4 FEET ONTO LAND OF FOUR WOODS LLC.
9. INLAND WETLANDS DEPICTED HEREON WERE FIELD DELINEATED BY ALL-POINTS TECHNOLOGY CORPORATION ON 8/17/21 AND WERE FIELD LOCATED BY DESIGN PROFESSIONALS, INC.

SURVEY NOTES:

THIS SURVEY AND MAP HAS BEEN PREPARED PURSUANT TO THE REGULATIONS OF CONNECTICUT STATE AGENCIES SECTIONS 20-300b-1 THRU 20-300b-20 AND THE "STANDARDS SUGGESTED METHODS AND PROCEDURES FOR SURVEYS AND MAPS IN THE STATE OF CONNECTICUT" AS ADOPTED BY THE CONNECTICUT ASSOCIATION OF LAND SURVEYORS, INC. ON AUGUST 29, 2019.

- TYPE OF SURVEY IS A PROPERTY SURVEY AND IS INTENDED TO DEPICT THE LOCATION OF EXISTING CONDITIONS RELATIVE TO PROPERTY LINES.
- THIS IS A RESURVEY BASED ON THE REFERENCED MAP.
- HORIZONTAL ACCURACY MEETS CLASS A-2 STANDARDS.

TO MY KNOWLEDGE AND BELIEF, THIS MAP IS SUBSTANTIALLY CORRECT AS NOTED HEREON.

BARRY C. CLARK — 16766 LIC. NO.

Copyright © 2019 Design Professionals, Inc — All Rights Reserved

21 JEFFREY DRIVE
P.O. BOX 1797
SOUTH WINDSOR, CT 06074
860-291-8755 - T
860-528-8757 - F
www.designprofessionalsinc.com
design professionals
CIVIL & TRAFFC ENGINEERS / PLANNERS / SURVEYORS
GIS ANALYSTS / LANDSCAPE ARCHITECTS

1. The plans and other data prepared by Design Professionals, Inc. (DPI) are instruments of service and shall remain the property of DPI. DPI shall retain all common law, statutory and other reserved rights, including the copyright thereto.
2. Existing utility locations depicted hereon are based on available information and should be field verified prior to construction.
3. Contractor shall notify Design Professionals, Inc. of any discrepancies found during construction which affect the design intent of this drawing so that alternate design can be provided to resolve the conflict in a timely manner.
4. The plans and other data prepared by Design Professionals, Inc. (DPI) are instruments of service and shall remain the property of DPI. DPI shall retain all common law, statutory and other reserved rights, including the copyright thereto.

PREPARED FOR:
DANIEL MADRIGAL
SCANNELL PROPERTIES
294 GROVE LANE EAST
SUITE 140
WAYZATA, MN 55391

PROJECT NO: 4670
DATE: 03-30-22
DESIGN BY: ---
DRAWN BY: SK
CHECKED BY: LRC

RESUBDIVISION PLAN
LAND OF
FOUR WOODS LLC
352 SULLIVAN AVE., 67 & 68 KENNEDY ROAD
SOUTH WINDSOR, CONNECTICUT

NO.	DATE	REVISIONS	BY

PROPERTY SURVEY

SCALE: 1" = 40'
0 20' 40' 80'

SHEET
RS-1

File: C:\jobs\4670\Survey\Survey-Base\4670 Subdiv Base.dwg Layout: RS-1 Plotted: 3/30/2022 10:09 AM Last Saved: 3/30/2022 8:59 AM Last Saved By: benwheeler

MAP REFERENCES:

1. PROPERTY AND TOPOGRAPHIC SURVEY LAND OF FOUR WOODS LLC., 67 & 68 KENNEDY ROAD AND 352 SULLIVAN AVENUE PREPARED FOR DANIEL MADRIGAL SCANNELL PROPERTIES, SOUTH WINDSOR, CONNECTICUT, SCALE: 1"=40', DATE: 09-20-21, REVISED ON 02-09-22. PREPARED BY DESIGN PROFESSIONALS, INC

NOTES:

1. PROPERTY IS IN THE INDUSTRIAL ZONE.
2. TOTAL COMBINED PARCEL "A" AT #67 KENNEDY & #68 KENNEDY ROAD ROAD & 352 SULLIVAN AVE. CONTAINS 838,308 SQUARE FEET OR 19.245 ACRES
3. HORIZONTAL DATUM IS BASED ON NAD83.
4. BUILDINGS ON COMBINED PARCEL "A" ARE EXISTING NON-CONFORMING TO FRONT YARD SETBACKS.
5. PROPERTY DOES NOT FALL WITHIN THE LIMITS OF A SPECIAL FLOOD HAZARD ZONE AS DEPICTED ON: "FIRM FLOOD INSURANCE RATE MAP NUMBER 09003C0377F TOWN OF SOUTH WINDSOR CONNECTICUT EFFECTIVE DATE: 9-26-2008 FEDERAL EMERGENCY MANAGEMENT AGENCY FEDERAL INSURANCE ADMINISTRATION.
6. UNDERGROUND UTILITY STRUCTURE AND FACILITY LOCATIONS DEPICTED AND NOTED HEREON HAVE BEEN COMPILED, IN PART, FROM RECORD MAPPING SUPPLIED BY THE RESPECTIVE UTILITY COMPANIES OR GOVERNMENTAL AGENCIES, FROM PAROL TESTIMONY AND FROM OTHER SOURCES. THESE LOCATIONS MUST BE CONSIDERED AS APPROXIMATE IN NATURE. ADDITIONALLY, OTHER SUCH FEATURES MAY EXIST ON THE SITE. THE EXISTENCE OF WHICH ARE UNKNOWN TO DESIGN PROFESSIONALS, INC. THE SIZE, LOCATION AND EXISTENCE OF ALL SUCH FEATURES MUST BE FIELD DETERMINED AND VERIFIED BY THE APPROPRIATE AUTHORITIES PRIOR TO CONSTRUCTION.
7. CONTRACTOR SHALL CONTACT "CALL BEFORE YOU DIG" FOR UNDERGROUND UTILITY MARKING AT LEAST TWO FULL WORKING DAYS PRIOR TO START OF CONSTRUCTION: 1-800-922-4455 OR WWW.CBYD.COM.
8. FENCE ALONG WESTERLY PROPERTY LINE ON LAND OF JKLN, LLC IS IN POOR CONDITION. THE LINE DEPICTED HEREON IS ALONG THE BASE OF THE EXISTING FENCE. THE TOP OF THE FENCE LEANS WESTERLY 1-4 FEET ONTO LAND OF FOUR WOODS LLC.
9. INLAND WETLANDS DEPICTED HEREON WERE FIELD DELINEATED BY ALL-POINTS TECHNOLOGY CORPORATION ON 8/17/21 AND WERE FIELD LOCATED BY DESIGN PROFESSIONALS, INC.

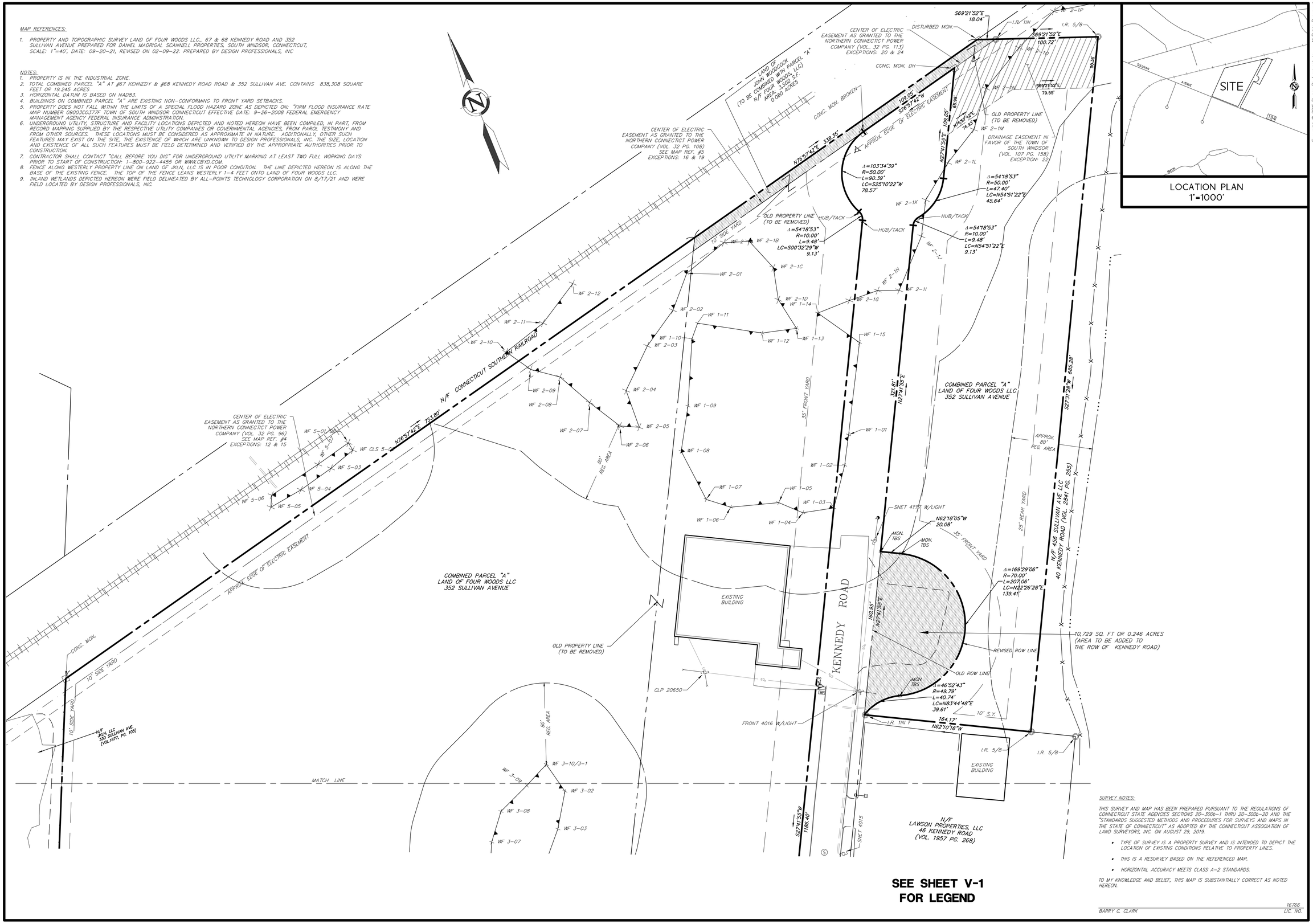

SEE SHEET V-1 FOR LEGEND

SURVEY NOTES:

THIS SURVEY AND MAP HAS BEEN PREPARED PURSUANT TO THE REGULATIONS OF CONNECTICUT STATE AGENCIES SECTIONS 20-300b-1 THRU 20-300b-20 AND THE "STANDARDS SUGGESTED METHODS AND PROCEDURES FOR SURVEYS AND MAPS IN THE STATE OF CONNECTICUT" AS ADOPTED BY THE CONNECTICUT ASSOCIATION OF LAND SURVEYORS, INC. ON AUGUST 29, 2019.

- TYPE OF SURVEY IS A PROPERTY SURVEY AND IS INTENDED TO DEPICT THE LOCATION OF EXISTING CONDITIONS RELATIVE TO PROPERTY LINES.
- THIS IS A RESURVEY BASED ON THE REFERENCED MAP.
- HORIZONTAL ACCURACY MEETS CLASS A-2 STANDARDS.

TO MY KNOWLEDGE AND BELIEF, THIS MAP IS SUBSTANTIALLY CORRECT AS NOTED HEREON.

BARRY C. CLARK — 16766 LIC. NO.

Copyright © 2018 Design Professionals, Inc — All Rights Reserved

21 JEFFREY DRIVE
P.O. BOX 261
SOUTH WINDSOR, CT 06074
860-291-8755 - T
860-528-3537 - F
www.designprofessionalsinc.com
design Professionals
CIVIL & TRAFFIC ENGINEERS / PLANNERS / SURVEYORS
GIS ANALYSTS / LANDSCAPE ARCHITECTS

This drawing is made when, if ever, the same has been signed by the Professional Engineer, Land Surveyor or Architect.

Locating utility locations depicted hereon are based on available information and should be field verified prior to construction.

The dimensions, elevations, and locations of all existing conditions, structures, and utilities are approximate.

This plan and other data prepared by Design Professionals, Inc. (DPI) are instruments of service and shall remain its property. No copies of plans or other data prepared by DPI shall be furnished to any other person or entity without the written permission of DPI. Any reuse without written verification or adaptation by DPI for the specified purpose shall be at the user's sole risk and without liability or legal exposure to DPI.

PREPARED FOR:
DANIEL MADRIGAL
SCANNELL PROPERTIES
294 GROVE LANE EAST
SUITE 140
WAYZATA, MN 55391

PROJECT NO: 4670
DATE: 03-30-22
DESIGN BY: ---
DRAWN BY: BDC
CHECKED BY: LRC

RESUBDIVISION PLAN LAND OF FOUR WOODS LLC

352 SULLIVAN AVE, 67 & 68 KENNEDY ROAD
SOUTH WINDSOR, CONNECTICUT

REVISIONS

NO.	DATE		BY
1	2-9-22	ADD #68 KENNEDY ROAD	BDC

PROPERTY SURVEY

SCALE: 1" = 40' — 0, 20', 40', 80'

SHEET
RS-2

File: C:\jobs\4670\Survey\Survey-Base\4670 Subdv Base.dwg Layout: RS-2 Plotted: 3/30/2022 10:08 AM Last Saved: 3/30/2022 8:59 AM Last Saved By: benwheeler