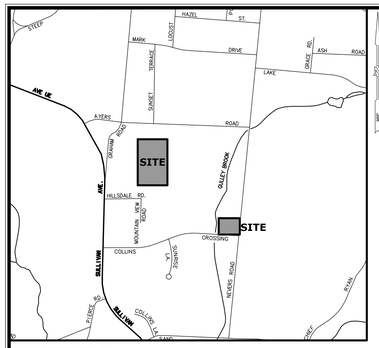

LOCATION MAP
SCALE: 1"=1000'

SOUTH WINDSOR HIGH SCHOOL SYNTHETIC TURF FIELD AND TENNIS COURT DEVELOPMENT

161 NEVERS ROAD
SOUTH WINDSOR, CONNECTICUT

DECEMBER 15, 2023

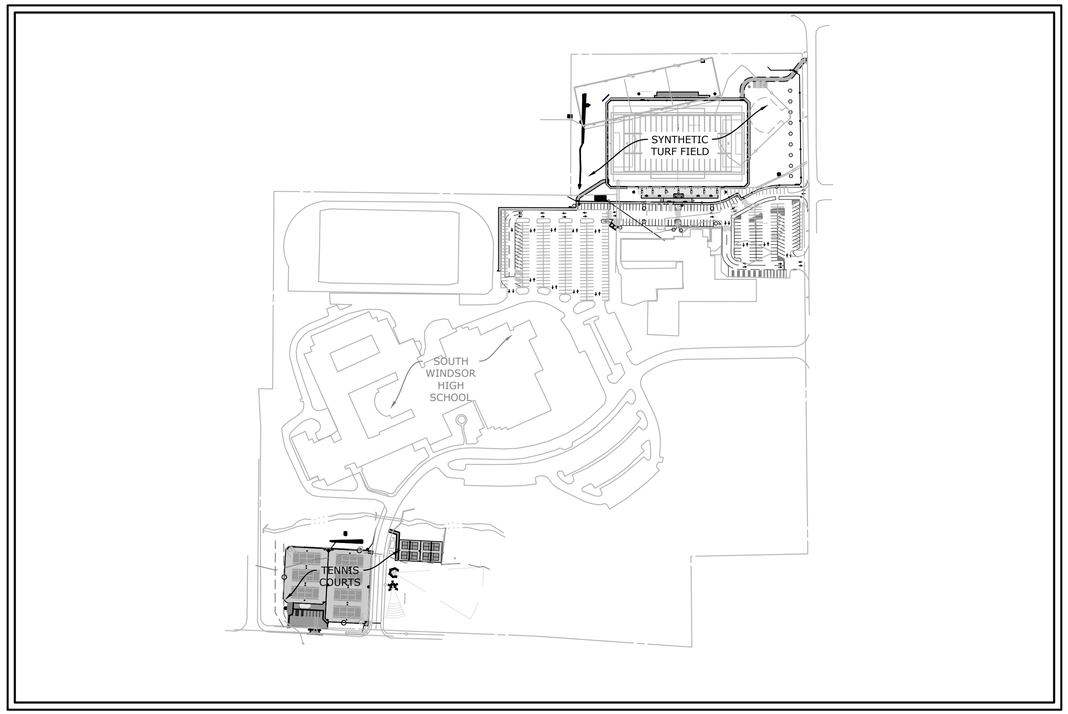

PROJECT VICINITY MAP:

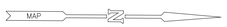

NOTES

1. ALL INFORMATION SHOWN IS BASED ON TOPOGRAPHIC AND PLANIMETRIC SURVEY CONDUCTED BY DIMARZO & BERECZKY, INC. AND INFORMATION SHOWN BEYOND THE LIMITS OF THIS MAP IS BASED ON AVAILABLE MAPPING AND SHOULD BE CONSIDERED APPROXIMATE.
2. CONSTRUCTION SHALL CONFORM TO TOWN OF SOUTH WINDSOR REQUIREMENTS.
3. ALL FINAL LOCATIONS OF INSTALLED MATERIALS ARE TO BE FIELD VERIFIED.
4. EXISTING UTILITY INFORMATION IS BEEN BASED UPON AVAILABLE INFORMATION AND MAY BE INCOMPLETE. ALL UTILITIES SHOWN SHOULD BE CONSIDERED APPROXIMATE.
5. CALL "CALL BEFORE YOU DIG", SHALL BE NOTIFIED PRIOR TO CONSTRUCTION. ANY DISCREPANCIES BETWEEN PLAN INFORMATION AND MARKED UTILITIES SHALL BE DOCUMENTED AND BROUGHT TO THE ENGINEERS ATTENTION.
6. ALL DISTURBED AREAS SHALL BE RESTORED TO PRE–CONSTRUCTION CONDITIONS. SITE IS TO BE PHOTO DOCUMENTED BY CONTRACTOR AND OWNER PRIOR TO CONSTRUCTION.
7. ALL PROPOSED CONTOURS AND SPOT ELEVATIONS INDICATE FINISHED GRADE. FINISHED GRADE FOR SYNTHETIC TURF SHALL BE THE TOP OF THE INFILL.
8. THE PLANS REQUIRE A CONTRACTOR'S WORKING KNOWLEDGE OF LOCAL, MUNICIPAL, WATER AUTHORITY, AND STATE CODES.
9. ALL FUEL, OIL, PAINT, OR OTHER HAZARDOUS MATERIALS USED DURING CONSTRUCTION SHOULD BE STORED IN A SECONDARY CONTAINER AND/OR REMOVED TO A LOCKED ENCLOSED AREA WITH AN IMPERVIOUS FLOOR DURING NON–WORK HOURS.
10. THE CONTRACTOR SHALL MAINTAIN SEDIMENTATION CONTROLS AND REPAIR AS NECESSARY UNTIL ALL CONSTRUCTION IS COMPLETED AND ALL DISTURBED AREAS ARE PERMANENTLY STABILIZED.
11. ALL DIMENSIONS AND ELEVATIONS SHALL BE VERIFIED IN THE FIELD PRIOR TO CONSTRUCTION. ANY DISCREPANCIES SHALL BE BROUGHT TO THE ATTENTION OF THE ENGINEER.

CONSTRUCTION SEQUENCE

1. SITE CONTRACTOR TO STAKE OUT LIMIT OF DISTURBANCE AND VEGETATION TO BE RETAINED. NO DISTURBANCE IS TO TAKE PLACE BEYOND THE LIMITS OF WORK SHOWN.
2. CONTRACTOR TO INSTALL SEDIMENT AND EROSION CONTROLS ALONG THE PERIMETER, AND STABILIZED CONSTRUCTION ENTRANCES.
3. INSTALL INLET PROTECTION IN ALL ADJACENT STORM DRAINAGE STRUCTURES.
4. INITIATE MASS EARTHWORK OPERATIONS AFTER ALL STRAW WATTLES ARE INSTALLED. CLEAR AND GRUB SITE AND STOCKPILE TOPSOIL AND OTHER EARTHEN MATERIALS. TRANSPORT MATERIALS TO LOCATION SPECIFIED BY OWNER.
5. INSTALL PERIMETER STORM DRAINAGE COLLECTOR PIPE AND PERIMETER FENCING
6. GRADE FIELD SUBGRADE AND INSTALL GEOTEXTILE FABRIC AND UNDERDRAINAGE.
7. INSTALL DYNAMIC DRAINAGE STONE.
8. INSTALL SYNTHETIC TURF.
9. TOPSOIL AND SEED ANY DISTURBED AREAS
10. REMOVE EROSION CONTROLS ONCE SITE IS STABILIZED.

NAME	TITLE
	TITLE SHEET
EX	SITE PLAN - EXISTING CONDITIONS
SP 1-2	SITE DEVELOPMENT PLAN
D-1 - D-4	SITE DETAILS

PREPARED BY:

CEH Engineering & Consulting

CEH ENGINEERING AND CONSULTING
580 SHEPARD AVENUE
HAMDEN, CT 06514

GENERAL CONTRACTOR:

FieldTurf
A Tarkett Sports Company

903 N OPDYKE ROAD SUITE A1
AUBURN HILLS, MI 482326
248-977-4388

OWNER:

TOWN OF SOUTH WINDSOR
1540 SULLIVAN AVENUE
SOUTH WINDSOR, CONNECTICUT 06074

APPLICANT

SOUTH WINDSOR PUBLIC SCHOOLS
1737 MAIN STREET
SOUTH WINDSOR, CONNECTICUT 06074

811
Know what's below.
Call before you dig.
www.cbyd.com

EXISTING CONDITIONS LEGEND

PROPERTY LINE

TREE LINE

CHAIN LINK FENCE

EXISTING CONTOUR — 172

WATER LINE — W

GAS LINE — G

SEWER LINE — SAN

UTILITY POLE

TEST PIT — TP

EXISTING CONDITIONS NOTES

1. ALL INFORMATION SHOWN IS BASED ON AVAILABLE MAPPING AND SHOULD BE CONSIDERED APPROXIMATE.

REMOVALS LEGEND

REMOVE AND DISPOSE OF SITE FEATURE

ALTER EXISTING SITE FEATURE TO REMAIN

STRIP TOPSOIL TO REMAIN ONSITE

MILL EXISTING PAVEMENT AND STOCKPILE TO REUSE AS BASE MATERIAL ON SITE

NOTES:

ALL TOPSOIL TO BE REMAIN ON SITE.

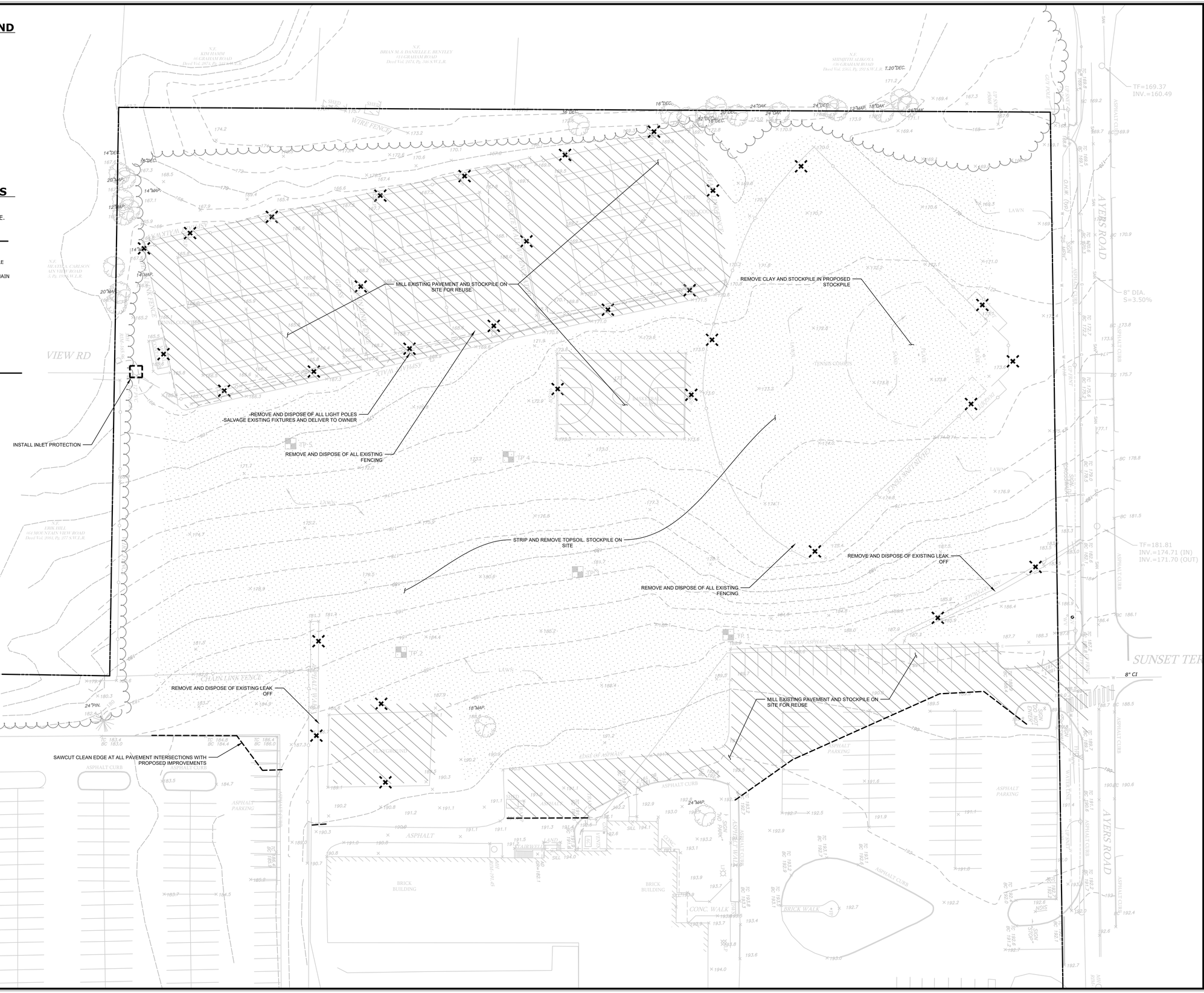

CEH Engineering & Consulting

CEH ENGINEERING AND CONSULTING
580 SHEPARD AVENUE
HAMDEN, CT 06514

FieldTurf
A Tarkett Sports Company

DESCRIPTION	DATE	BY

SITE PLAN - EXISTING CONDITIONS AND REMOVALS

PROPOSED SYNTHETIC TURF FIELD AND TENNIS COURT DEVELOPMENT
SOUTH WINDSOR HIGH SCHOOL

AYERS ROAD AND NEVERS ROAD
SOUTH WINDSOR, CONNECTICUT

CEH	JDH
DESIGNED	DRAWN

SCALE: 1"=30'

DATE: DECEMBER 15, 2023

SHEET: EX-1

EXISTING CONDITIONS LEGEND

PROPERTY LINE

TREE LINE

CHAIN LINK FENCE

EXISTING CONTOUR — 172

WATER LINE — W

GAS LINE — G

SEWER LINE — SAN

UTILITY POLE

TEST PIT — TP

EXISTING CONDITIONS NOTES

1. ALL INFORMATION SHOWN IS BASED ON AVAILABLE MAPPING AND SHOULD BE CONSIDERED APPROXIMATE.

REMOVALS LEGEND

REMOVE AND DISPOSE OF SITE FEATURE

ALTER EXISTING SITE FEATURE TO REMAIN

STRIP TOPSOIL TO REMAIN ONSITE

MILL EXISTING PAVEMENT AND STOCKPILE TO REUSE AS BASE MATERIAL ON SITE

NOTES:

ALL TOPSOIL TO BE REMAIN ON SITE.

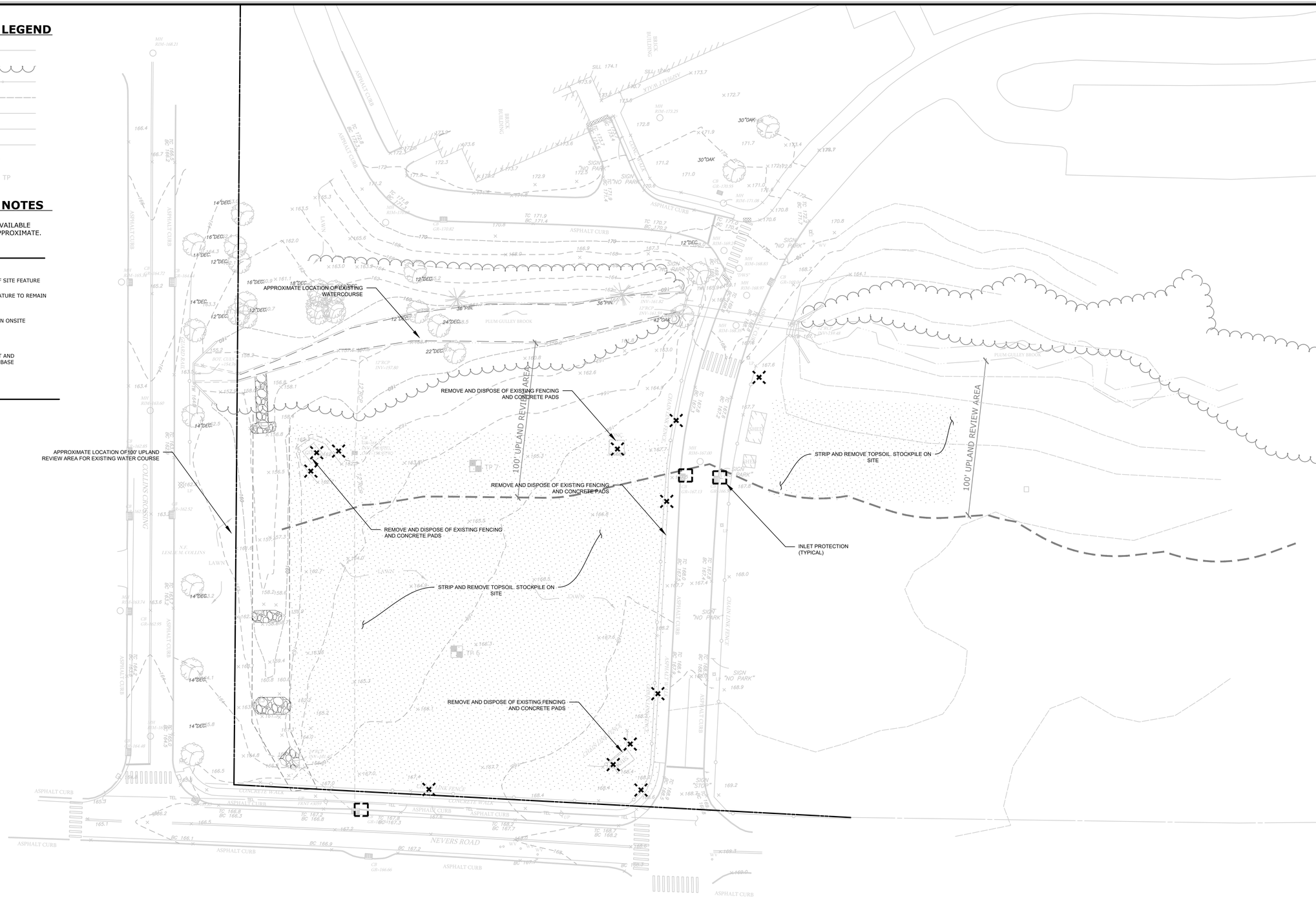

NOTES:

1. ALL INFORMATION SHOWN IS BASED ON AVAILABLE MAPPING AND SHOULD BE CONSIDERED APPROXIMATE.

CEH Engineering & Consulting

CEH ENGINEERING AND CONSULTING
580 SHEPARD AVENUE
HAMDEN, CT 06514

FieldTurf
A Tarkett Sports Company

DESCRIPTION	DATE	BY

SITE PLAN - EXISTING CONDITIONS AND REMOVALS

PROPOSED SYNTHETIC TURF FIELD AND TENNIS COURT DEVELOPMENT
SOUTH WINDSOR HIGH SCHOOL

AYERS ROAD AND NEVERS ROAD
SOUTH WINDSOR, CONNECTICUT

CEH	JDH
DESIGNED	DRAWN

1"=30'
SCALE

DECEMBER 15, 2023
DATE

EX-2
SHEET

SITE PLAN LEGEND

- CHAIN LINK FENCE
- STORM PIPE
- WALL
- PROPOSED CONTOUR (176)
- SYNTHETIC TURF FIELD
- ASPHALT
- CONCRETE
- STONE PATHWAY
- SCREENING TREE
- ATHLETIC FIELD LIGHT POLE
- SPOT GRADE + 175.00

PARKING COUNTS:

EXISTING PARKING ON SITE: 547 SPACES
PROPOSED PLAN CHANGES:
- REDUCTION OF 117 SPACES
- ADDITION OF 170 SPACES

TOTAL PARKING COUNT FOR PROPOSED CONDITIONS:
- 600 TOTAL SPACES ON SITE (NET ADDITION OF 53 SPACES)

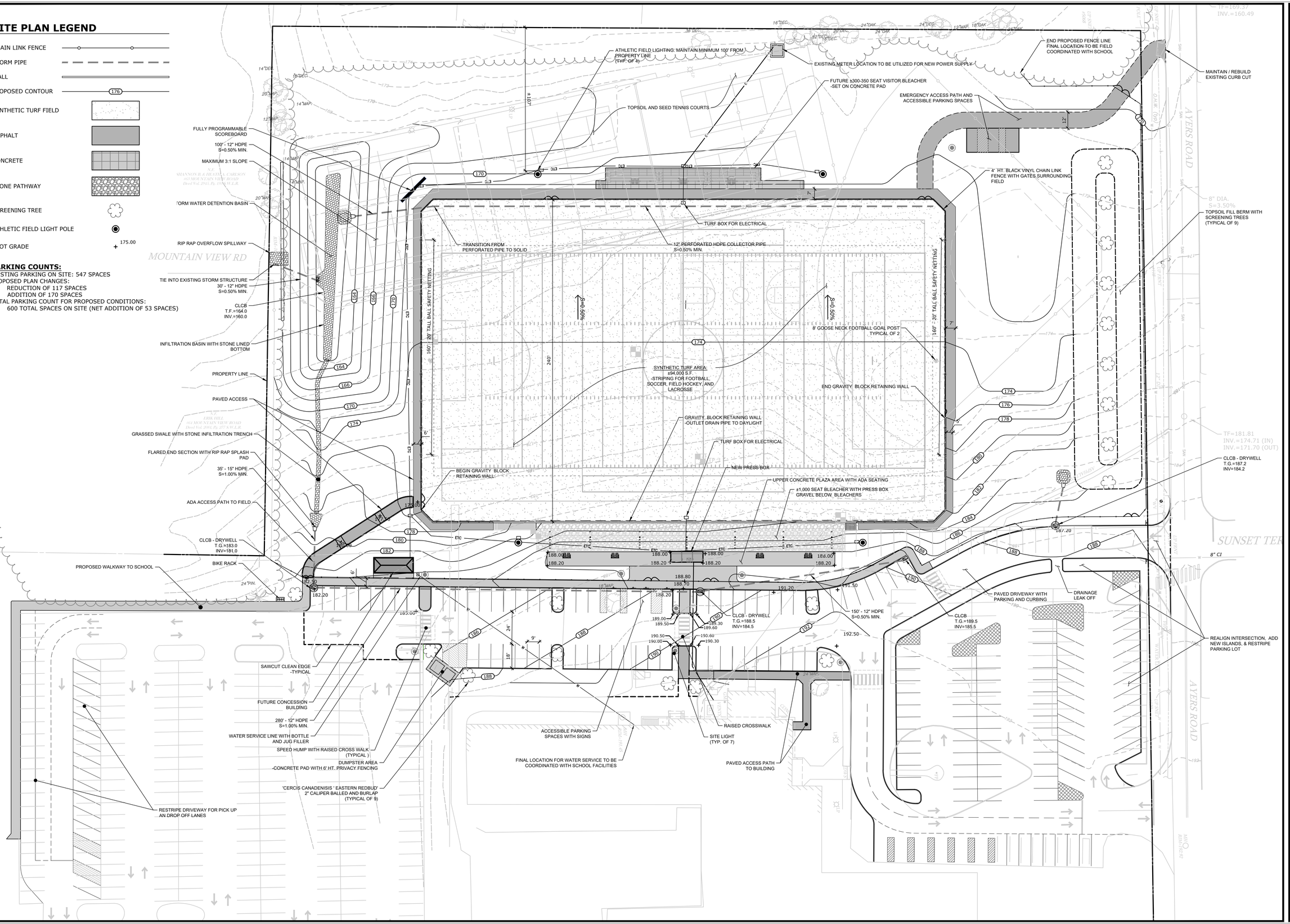

CEH ENGINEERING AND CONSULTING
580 SHEPARD AVENUE
HAMDEN, CT 06514

FieldTurf
A Tarkett Sports Company

DESCRIPTION	DATE	BY

SITE DEVELOPMENT PLAN

PROPOSED SYNTHETIC TURF FIELD AND TENNIS COURT DEVELOPMENT
SOUTH WINDSOR HIGH SCHOOL

AYERS ROAD AND NEVERS ROAD
SOUTH WINDSOR, CONNECTICUT

CEH	JDH
DESIGNED	DRAWN

SCALE: 1"=30'

DATE: DECEMBER 15, 2023

SHEET: SP-1

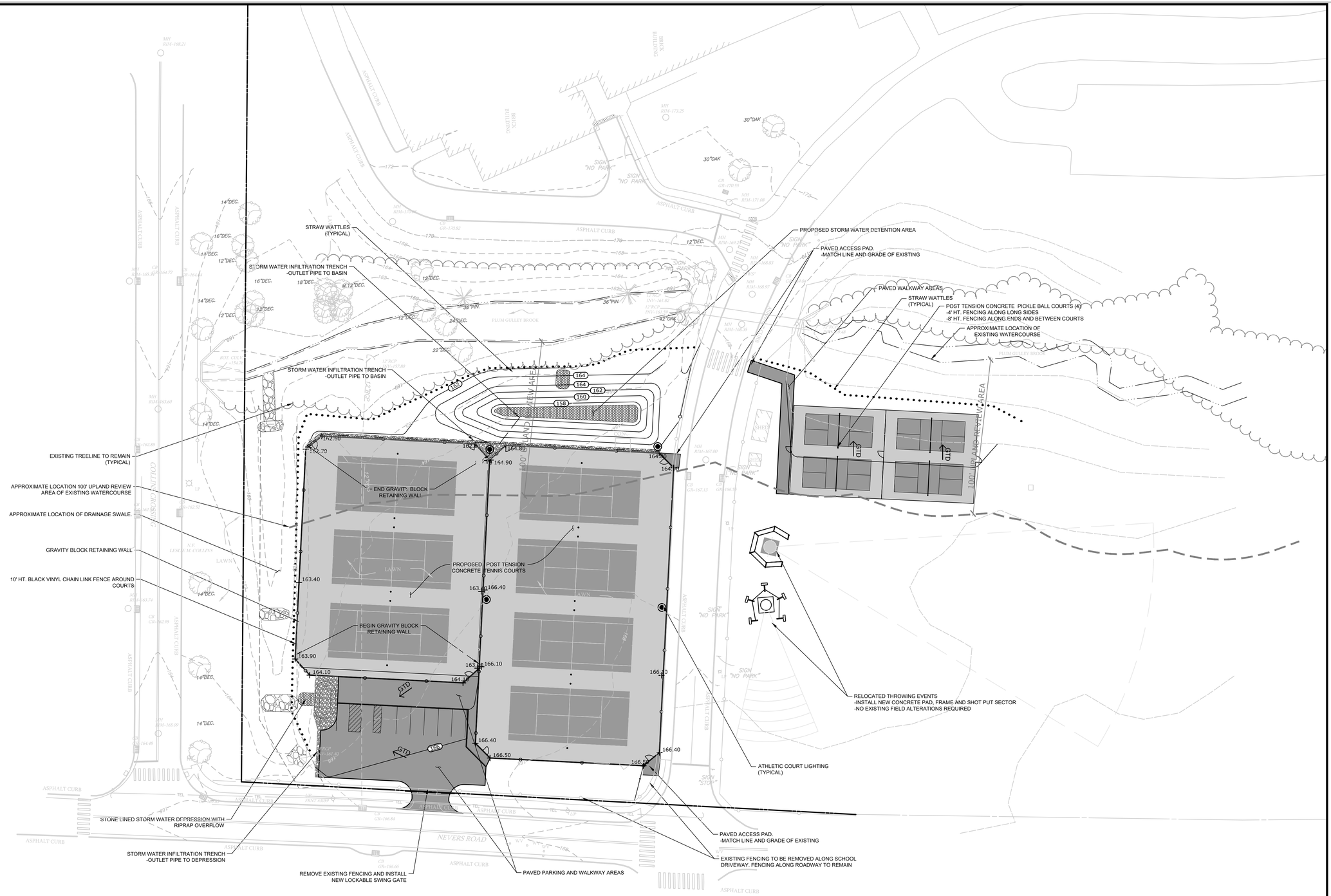

NOTES:

1. ALL INFORMATION SHOWN IS BASED ON AVAILABLE MAPPING AND SHOULD BE CONSIDERED APPROXIMATE.

CEH Engineering & Consulting

CEH ENGINEERING AND CONSULTING
580 SHEPARD AVENUE
HAMDEN, CT 06514

FieldTurf
A Tarkett Sports Company

DESCRIPTION	DATE	BY

SITE DEVELOPMENT PLAN

PROPOSED SYNTHETIC TURF FIELD AND TENNIS COURT DEVELOPMENT
SOUTH WINDSOR HIGH SCHOOL

AYERS ROAD AND NEVERS ROAD
SOUTH WINDSOR, CONNECTICUT

CEH	JDH
DESIGNED	DRAWN

SCALE: 1"=30'

DATE: DECEMBER 15, 2023

SHEET: SP-2

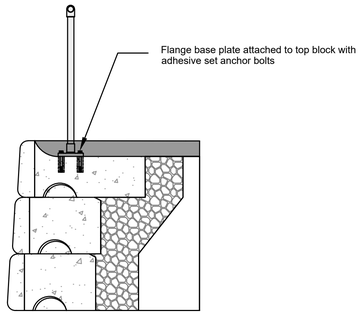

TYPICAL PLATE MOUNTED FENCE

NOT TO SCALE

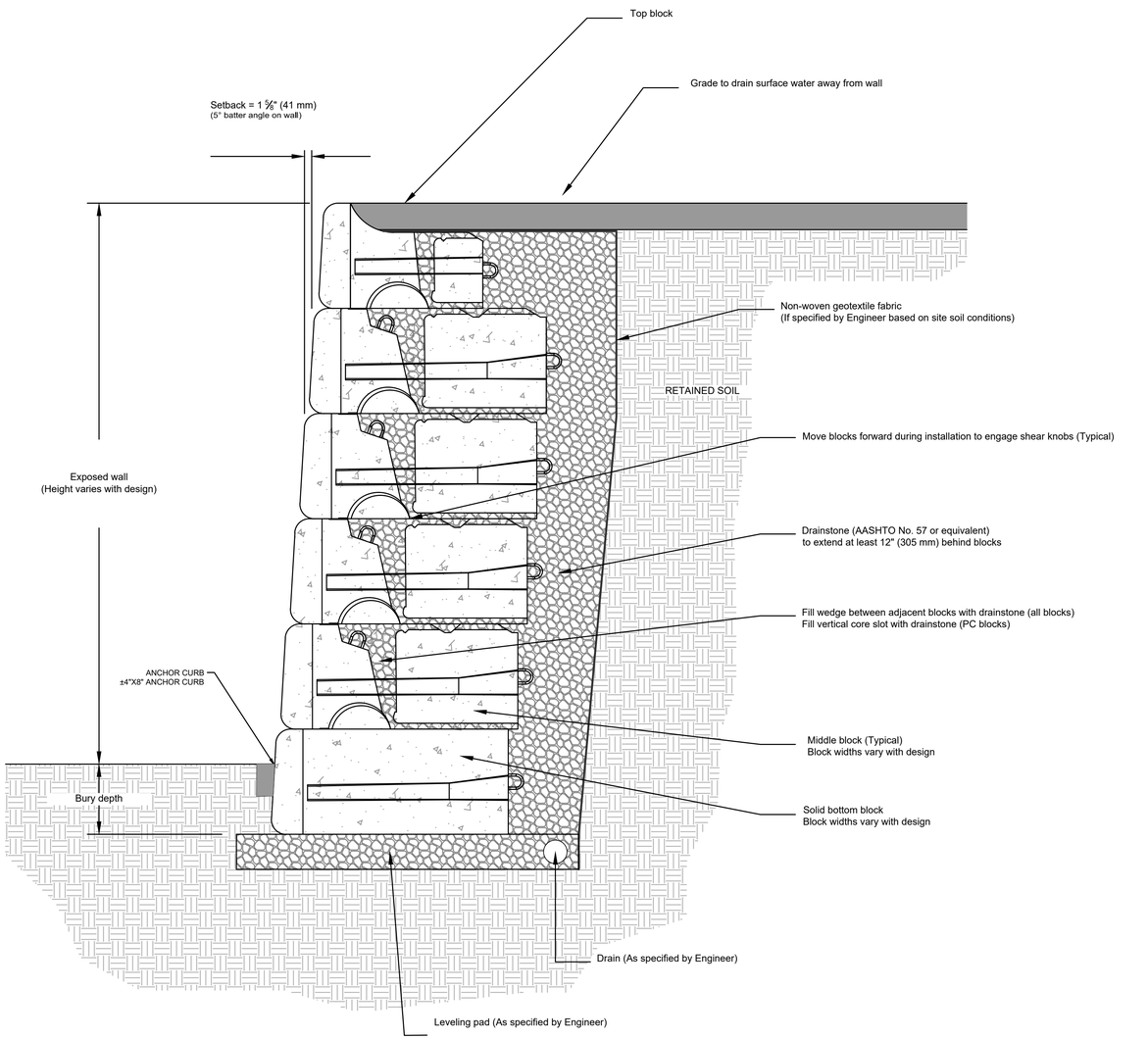

TYPICAL GRAVITY RETAINING WALL

NOT TO SCALE

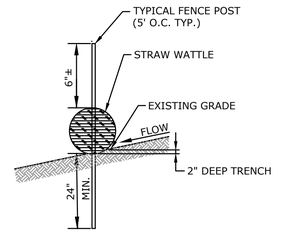

WATTLE ON BARE SOIL

N.T.S.

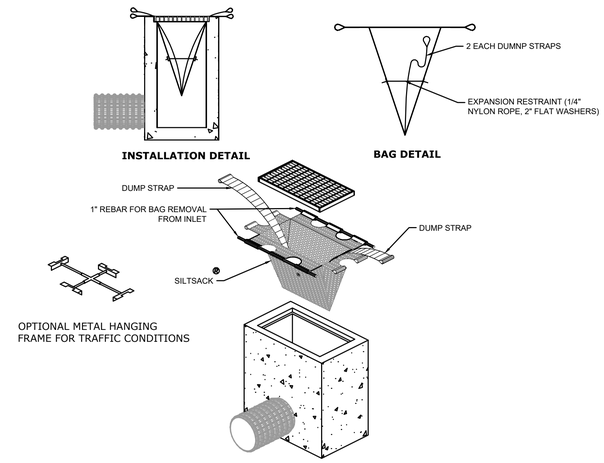

INLET PROTECTION

N.T.S.

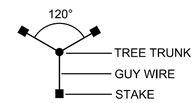

PLAN VIEW

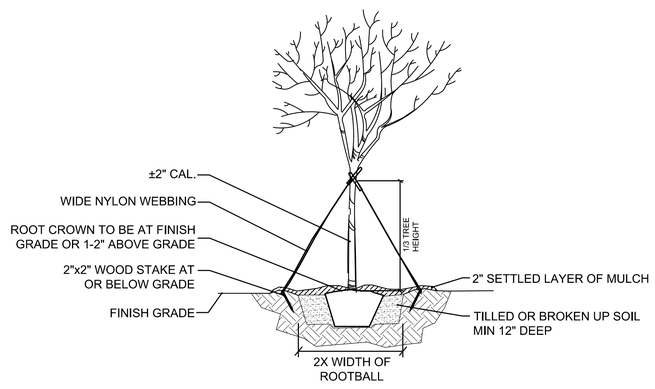

TREE PLANTING DETAIL

N.T.S.

CEH Engineering & Consulting

CEH ENGINEERING
AND CONSULTING
580 SHEPARD AVENUE
HAMDEN, CT 06514

FieldTurf
A Tarkett Sports Company

DESCRIPTION	DATE	BY

SITE DETAILS

PROPOSED SYNTHETIC TURF FIELD AND TENNIS COURT DEVELOPMENT
SOUTH WINDSOR HIGH SCHOOL

AYERS ROAD AND NEVERS ROAD
SOUTH WINDSOR, CONNECTICUT

CEH	JDH
DESIGNED	DRAWN

SCALE: NOT TO SCALE

DATE: DECEMBER 15, 2023

SHEET: D-1

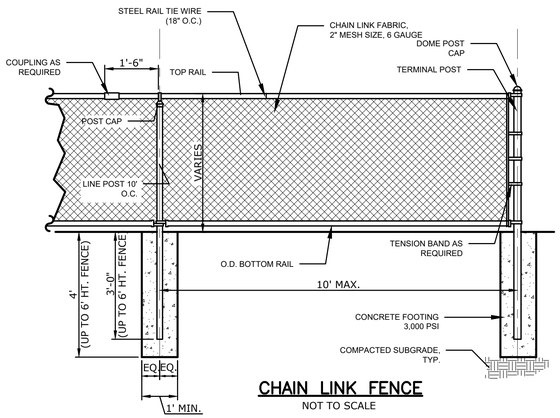

CHAIN LINK FENCE

NOT TO SCALE

CHAIN LINK FENCE POST AND RAIL SIZING	
POST OR RAIL TYPE	4' & 6' HT. FENCE
TERMINAL OR COMMON	2-7/8"
LINE POST	2-7/8"
TOP RAIL	1-5/8"
INTERMEDIATE RAIL	AS NOTED 1-5/8"
BOTTOM RAIL	1-5/8"
GATE POST	2-7/8"
GATE FRAME	1-7/8"

NOTE:

1. ALL CHAIN LINK POSTS, RAILS, FABRIC AND HARDWARE TO BE BLACK VINYL
2. 4' AND 6' HEIGHT FENCE POSTS MAY BE CORE DRILLED INTO CURBING.
3. ALL GATE POSTS TO HAVE FULL DEPTH FOUNDATIONS.
4. FENCE HEIGHTS ABOVE 6' ARE PROVIDED ON SEPARATE DETAIL

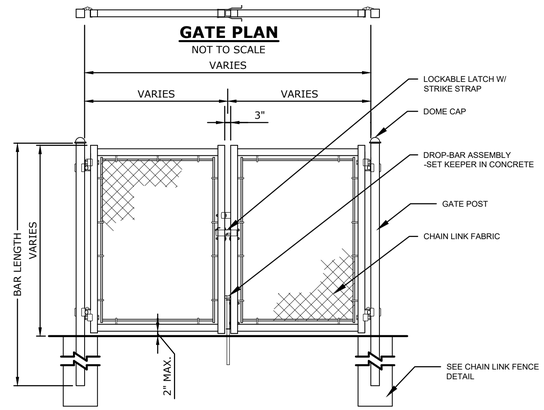

DOUBLE CHAIN LINK FENCE GATE

NOT TO SCALE

DOUBLE LEAF GATES		
OPENING	GATE POSTS	HINGE SPACE (S)
FACE TO FACE	SQ & RND SIZES	POST TO UPRIGHT
	2 7/8" 2.875" OD	FOR SQUARE & ROUND GATE POSTS: 2 7/8"

NOTES:

1. MATERIALS AND METHOD OF CONSTRUCTION SHALL CONFORM TO CHAIN LINK FENCE DETAIL ON THIS SHEET.
2. CONTRACTOR TO SUBMIT SHOP DRAWINGS FOR REVIEW AND APPROVAL

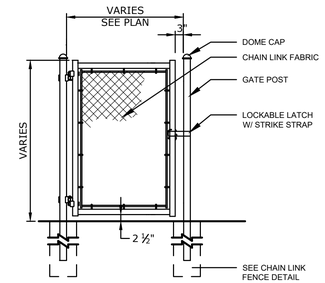

NOTES:

1. MATERIALS AND METHOD OF CONSTRUCTION SHALL CONFORM TO CHAIN LINK FENCE DETAIL ON THIS SHEET
2. CONTRACTOR TO SUBMIT SHOP DRAWINGS
3. GATE SWINGING DIRECTION:
   - 3.1. ALL SWING GATES ADJACENT TO SYNTHETIC TURF SHALL ONLY BE ALLOWED TO SWING AWAY FROM THE SYNTHETIC TURF WHERE POSSIBLE.
   - 3.2. PROVIDE STOP AS REQUIRED TO PREVENT SWINGING OF GATE TOWARDS THE SYNTHETIC SURFACE.

SINGLE CHAIN LINK FENCE GATE

NOT TO SCALE

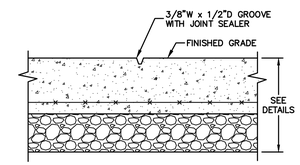

CONTROL JOINT

N.T.S.

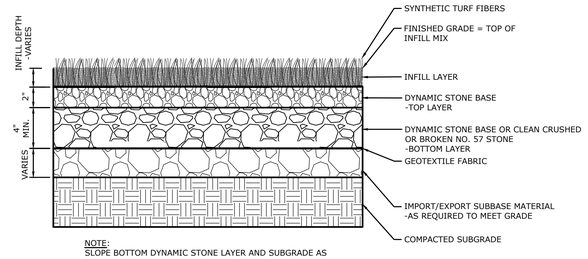

NOTE:
SLOPE BOTTOM DYNAMIC STONE LAYER AND SUBGRADE AS SHOWN ON THE GRADING PLAN TOWARDS COLLECTOR PIPES.

SYNTHETIC INFILL TURF

NOT TO SCALE

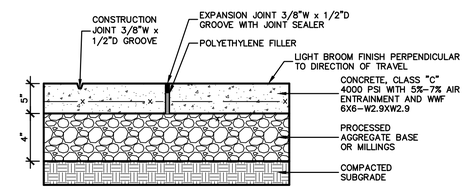

NOTES:

1. EXP. JOINTS 20' O.C. MAX. SCORE JOINTS EVERY 5' O.C..
2. CONCRETE SHALL BE SCREEDED, FLOATED, WITH STIFF BROOM FINISH, TOOLED JOINTS AND PITCHED TO GRADE. FINISH TO MATCH ADJACENT EXISTING CONDITIONS.
3. CROSS PITCH SHALL NOT EXCEED 2.0%.

CONCRETE SIDEWALK

N.T.S.

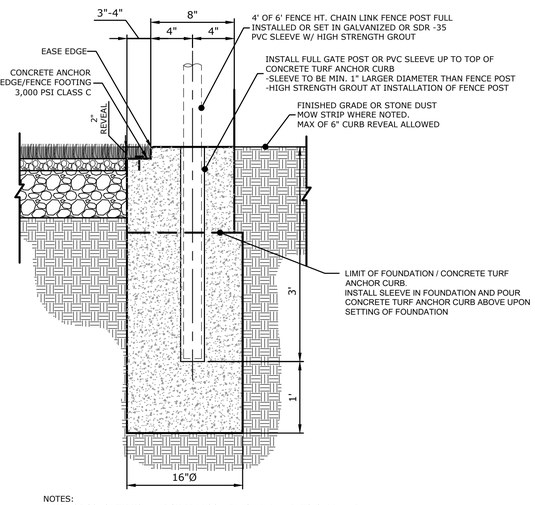

NOTES:
1. TOP OF CONCRETE TO HAVE STIFF BROOM FINISH PARALLEL TO CURB LINE
2. PROVIDE EXPANSION JOINTS IN CURB @ 20' MAXIMUM.
3. ANCHORING OF TURF PER FIELDTURF SPECIFICATIONS.

FLUSH CONCRETE TURF ANCHOR CURB AT FENCE GATE POST

NOT TO SCALE

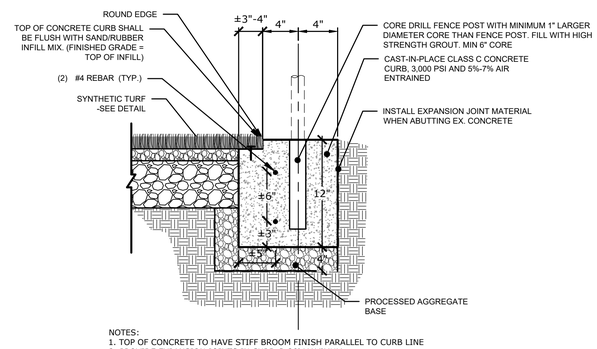

NOTES:
1. TOP OF CONCRETE TO HAVE STIFF BROOM FINISH PARALLEL TO CURB LINE
2. PROVIDE EXPANSION JOINTS IN CURB @ 20' MAXIMUM.
3. ANCHORING OF TURF PER FIELDTURF SPECIFICATIONS.

CONCRETE TURF ANCHOR CURB AT FENCE POST

NOT TO SCALE

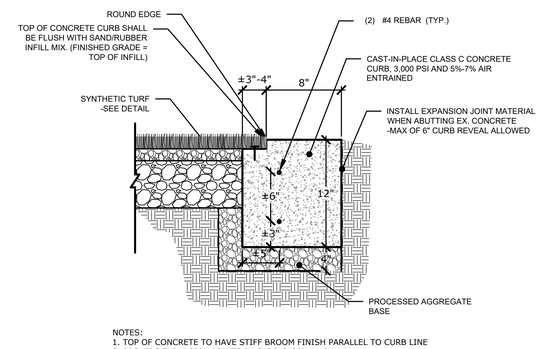

NOTES:
1. TOP OF CONCRETE TO HAVE STIFF BROOM FINISH PARALLEL TO CURB LINE
2. PROVIDE EXPANSION JOINTS IN CURB @ 20' MAXIMUM.
3. ANCHORING OF TURF PER FIELDTURF SPECIFICATIONS.

CONCRETE TURF ANCHOR CURB

NOT TO SCALE

CEH Engineering & Consulting
CEH ENGINEERING AND CONSULTING
580 SHEPARD AVENUE
HAMDEN, CT 06514

FieldTurf
A Tarkett Sports Company

DESCRIPTION	DATE	BY

SITE DETAILS

PROPOSED SYNTHETIC TURF FIELD AND TENNIS COURT DEVELOPMENT
SOUTH WINDSOR HIGH SCHOOL

AYERS ROAD AND NEVERS ROAD
SOUTH WINDSOR, CONNECTICUT

CEH	JDH
DESIGNED	DRAWN

NOT TO SCALE
SCALE

DECEMBER 15, 2023
DATE

D-2
SHEET

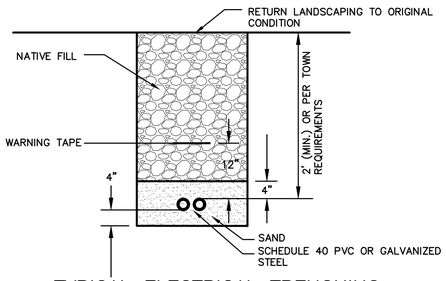

TYPICAL ELECTRICAL TRENCHING AND BACKFILL DETAIL

NOT TO SCALE

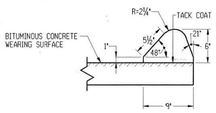

BITUMINOUS LIP CURBING

NOT TO SCALE

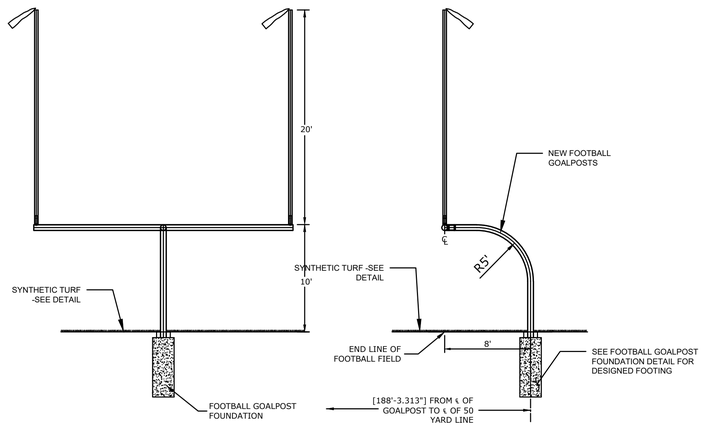

FOOTBALL GOAL POST

N.T.S.

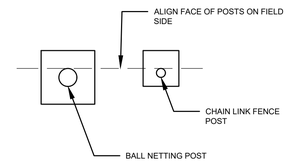

POST ALIGNMENT

N.T.S.

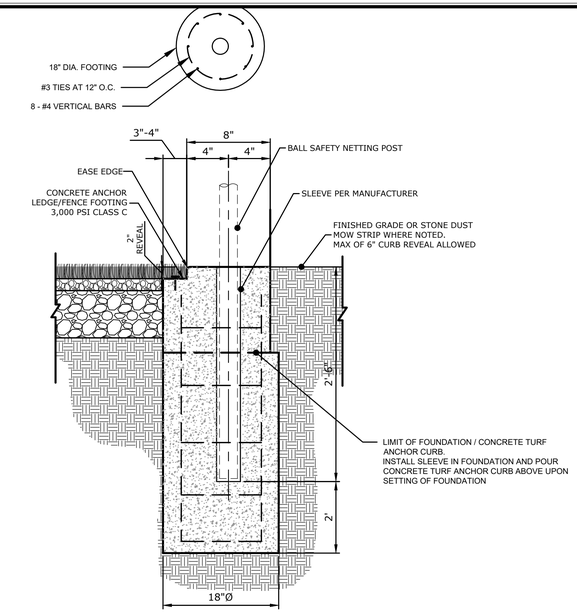

NOTES:
1. TOP OF CONCRETE TO HAVE STIFF BROOM FINISH PARALLEL TO CURB LINE
2. PROVIDE EXPANSION JOINTS IN CURB @ 20' MAXIMUM.
3. ANCHORING OF TURF PER FIELDTURF SPECIFICATIONS.

INTEGRAL BALL SAFETY NETTING FOUNDATION ABOVE FENCE

NOT TO SCALE

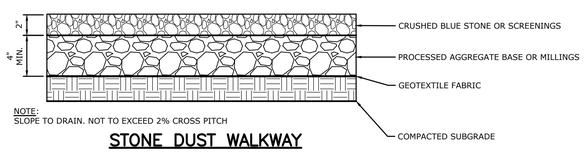

NOTE:
SLOPE TO DRAIN. NOT TO EXCEED 2% CROSS PITCH

STONE DUST WALKWAY

NOT TO SCALE

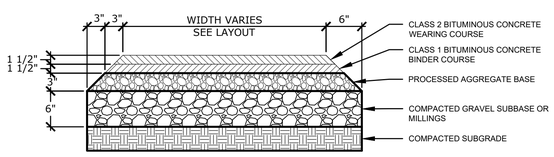

BITUMINOUS CONCRETE WALK

NOT TO SCALE

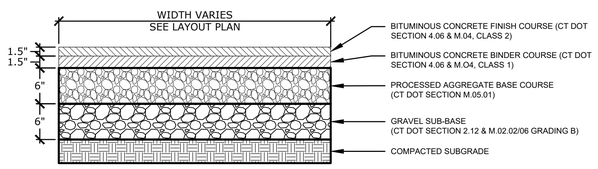

BITUMINOUS CONCRETE

NOT TO SCALE

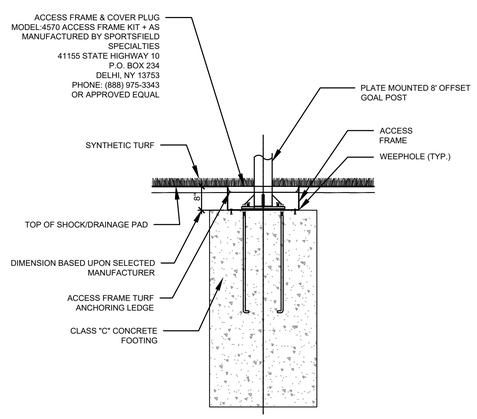

SIDE ELEVATION

FOOTBALL GOALPOST ACCESS FRAME

N.T.S.

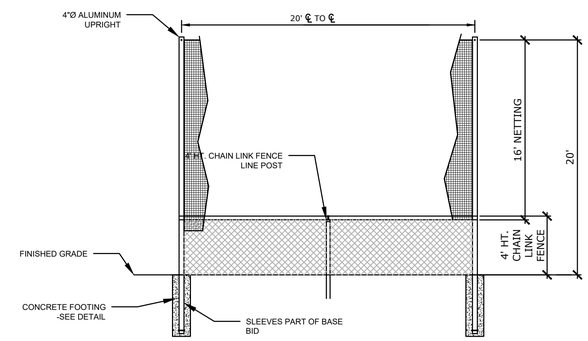

NOTES:
1. 20' HT. BALL SAFETY SYSTEM, MODEL: TFBSS420-SG-20' HT. WITH CUSTOM NET AS MANUFACTURED BY SPORTSFIELD SPECIALTIES, INC. NEW DELHI, NY TEL: 888-975-3343, OR APPROVED EQUAL.
2. NETTING SHALL OVERLAP CHAIN LINK FENCE IF SELECTED WITH A MINIMUM OF 1-FOOT AND SHALL BE SECURED TO THE FENCING FABRIC WITH QUICK CLIP SPRING HOOKS.
3. NETTING SHALL OVERLAP THE CHAIN LINK FENCE ON THE PLAYING FIELD SIDE OF THE FENCE FABRIC.

INTEGRAL BALL SAFETY NETTING - 20' HT.

N.T.S.

CEH Engineering & Consulting
CEH ENGINEERING AND CONSULTING
580 SHEPARD AVENUE
HAMDEN, CT 06514

FieldTurf
A Tarkett Sports Company

DATE	DESCRIPTION	BY

SITE DETAILS

PROPOSED SYNTHETIC TURF FIELD AND TENNIS COURT DEVELOPMENT
SOUTH WINDSOR HIGH SCHOOL

AYERS ROAD AND NEVERS ROAD
SOUTH WINDSOR, CONNECTICUT

CEH	JDH
DESIGNED	DRAWN

SCALE: NOT TO SCALE

DATE: DECEMBER 15, 2023

SHEET: D-3

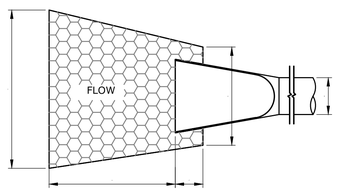

PLAN

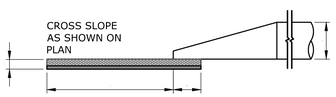

ELEVATION

OUTLET PROTECTION ID	TYPE	SP (FT)	RP (FT)	LA (FT)	W1 (FT)	W2 (FT)	D (IN)
FES ANALYSIS POINT C	TYPE B INTER-MEDIATE	1.25	1.25	10.0	4.0	7.0	12

FLARED END WITH RIP RAP SPLASH PAD

NOT TO SCALE

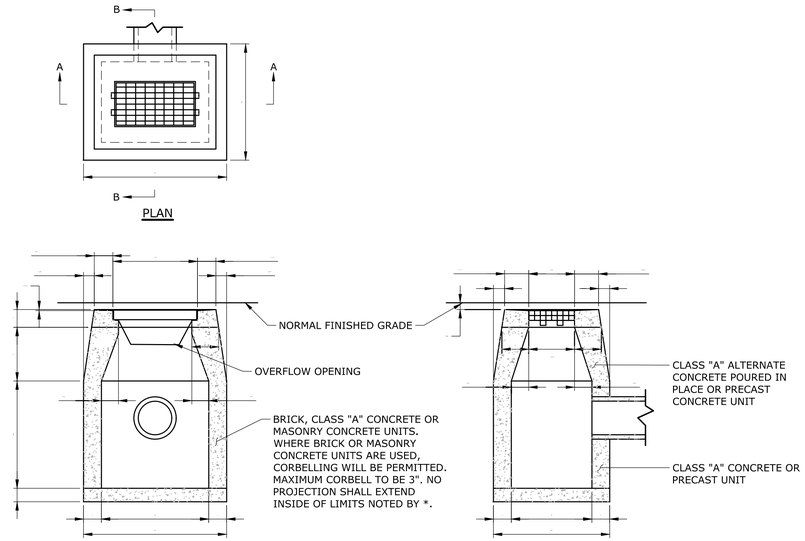

PLAN

SECTION A-A

SECTION B-B

PREFORMED CONCRETE STRUCTURE OR APPROVED EQUAL

TYPICAL OUTLET CONTROL STRUCTURE

NOT TO SCALE

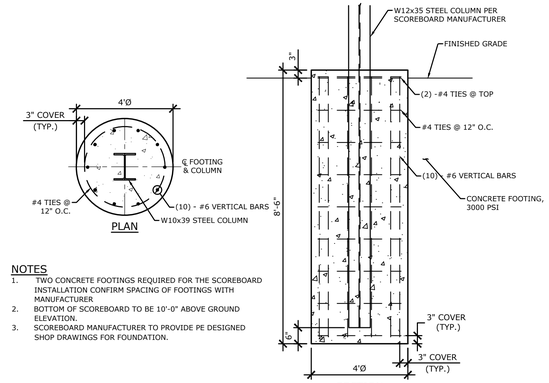

PLAN

SECTION

NOTES

1. TWO CONCRETE FOOTINGS REQUIRED FOR THE SCOREBOARD INSTALLATION CONFIRM SPACING OF FOOTINGS WITH MANUFACTURER
2. BOTTOM OF SCOREBOARD TO BE 10'-0" ABOVE GROUND ELEVATION.
3. SCOREBOARD MANUFACTURER TO PROVIDE PE DESIGNED SHOP DRAWINGS FOR FOUNDATION.

SCOREBOARD FOOTING DETAIL

NOT TO SCALE

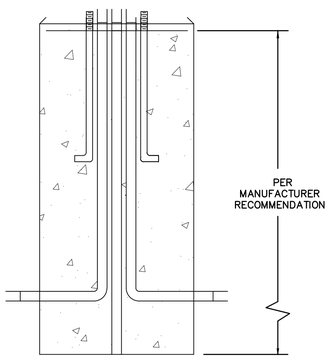

FRONT VIEW

DESIGN NOTES:

1 – CONCRETE 4000 PSI AT 28 DAYS.
2 – BASIS OF DESIGN: MUSCO LIGHTING PRECAST WITH REINFORCING AS SPECIFIED BY OEM.
3 – ANCHOR BOLTS AND GROUNDING AS SPECIFIED BY OEM.
4 – BALLAST POURED AROUND BASE IF REQUIRED.
5 – BOLT PROJECTION AS SPECIFIED BY POLE MANUFACTURER.
6 – 3/4" X 10' UL LISTED COPPER BONDED GROUND ROD.
7 – SEE PLAN FOR CONDUIT SIZES.
8 – EC TO COORDINATE CONDUIT ENTRANCE INTO THE FOUNDATION(S) PER SITE CONDITIONS/REQUIREMENTS.

LIGHT POLE FOUNDATION DETAIL

NOT TO SCALE

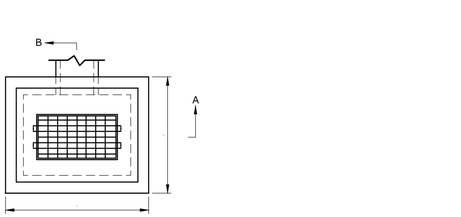

*SEE SITE PLAN FOR INVERTS, CONNECTIONS, AND CLEANOUT LOCATIONS

STONE TRENCH IN BASIN

NOT TO SCALE

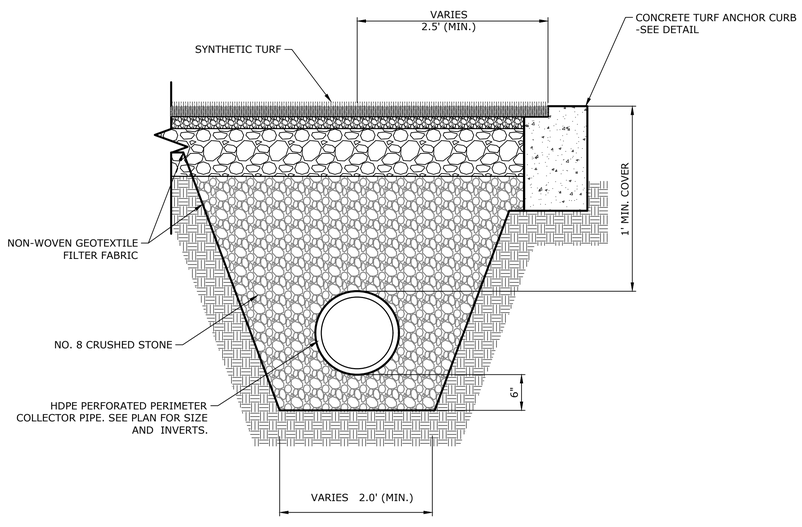

COLLECTOR PIPE SECTION

NOT TO SCALE

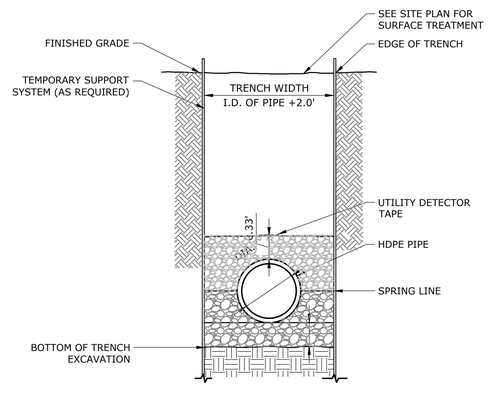

TYPICAL STORM DRAINAGE TRENCH

NOT TO SCALE

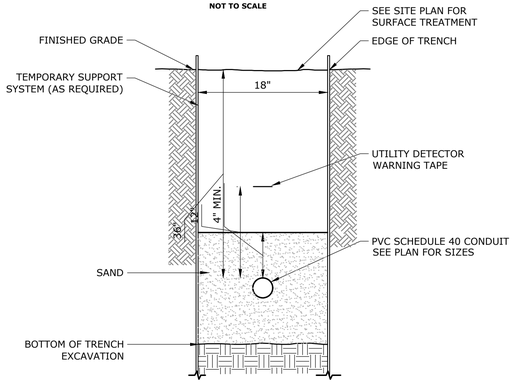

TYPICAL ELECTRICAL CONDUIT TRENCHING

NOT TO SCALE

CEH Engineering & Consulting
CEH ENGINEERING
AND CONSULTING
580 SHEPARD AVENUE
HAMDEN, CT 06514

FieldTurf
A Tarkett Sports Company

DATE	BY	DESCRIPTION

SITE DETAILS

PROPOSED SYNTHETIC TURF FIELD AND TENNIS COURT DEVELOPMENT
SOUTH WINDSOR HIGH SCHOOL

AVERS ROAD AND NEVERS ROAD
SOUTH WINDSOR, CONNECTICUT

CEH	JDH
DESIGNED	DRAWN

SCALE: NOT TO SCALE

DATE: DECEMBER 15, 2023

SHEET: D-4