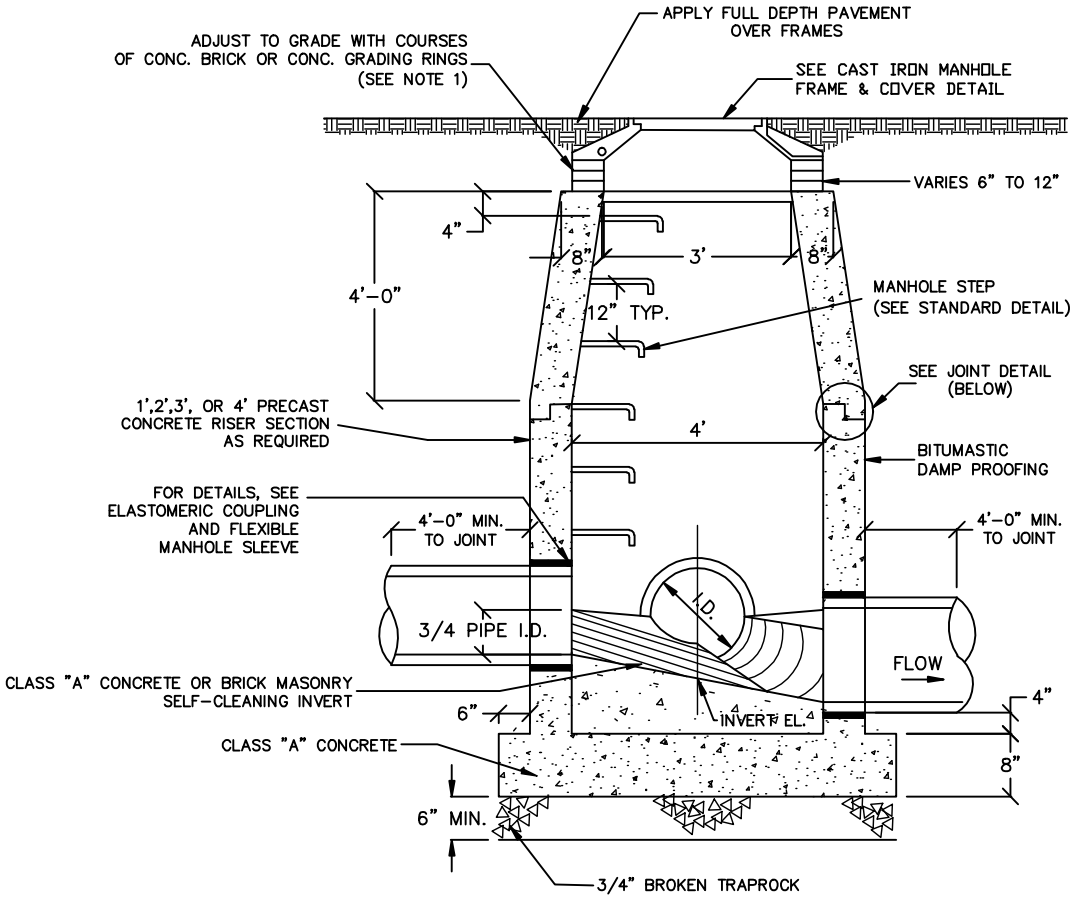

ELEVATION

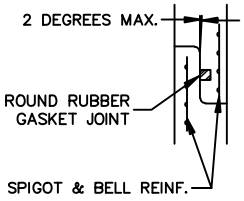

GASKET JOINT

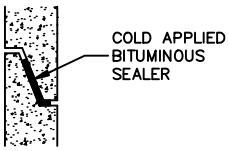

SECTION JOINT

NOTES:

1. TOP STEP TO BE A MAXIMUM OF 24" BELOW TOP OF MANHOLE FRAME & COVER ELEVATION.
2. IF TOTAL DEPTH IS TEN FEET OR GREATER, CERTIFICATION OF HS-20 LOAD BEARING CAPACITY SHALL BE SUBMITTED TO THE TOWN ENGINEER FOR APPROVAL PRIOR TO INSTALLATION.
3. SEE MISCELLANEOUS MANHOLE DETAILS SHEET.
4. SEAL ALL LIFTING HOLES INSIDE AND OUTSIDE OF RISER SECTION.

NOT TO SCALE

TOWN OF SOUTH WINDSOR STANDARD DETAIL MARCH, 2005	PRECAST CONCRETE SANITARY SEWER MANHOLE REVISED:	APPROVED PUBLIC WORKS DIRECTOR

MHOLE.DWG