TOWN OF SOUTH WINDSOR
STANDARD DETAIL

MARCH, 2005

TYPE "C" CATCH BASIN DOUBLE GRATE TYPE I

REVISED:

APPROVED

PUBLIC WORKS DIRECTOR

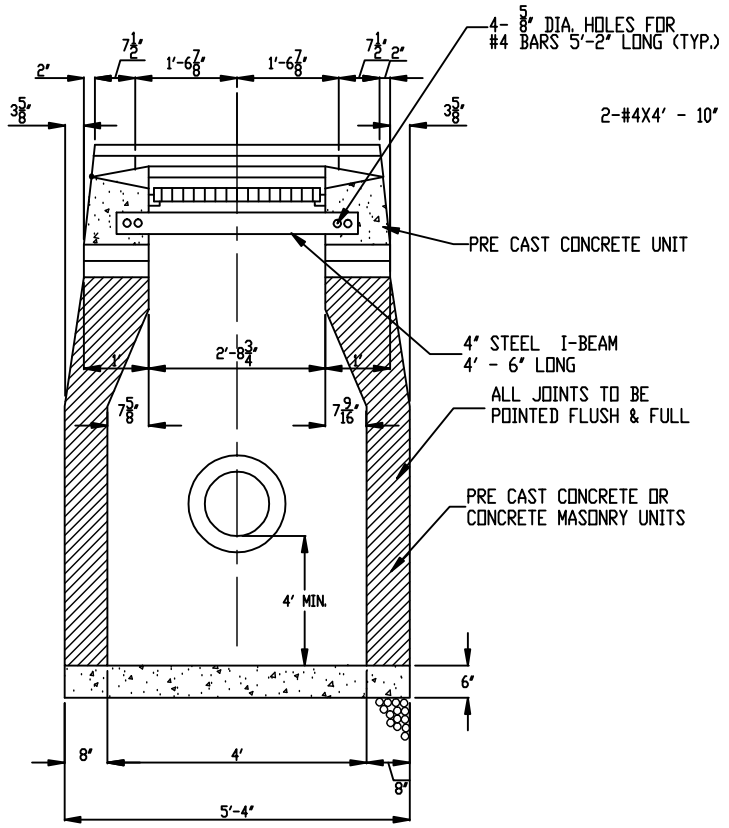

FRONT ELEVATION

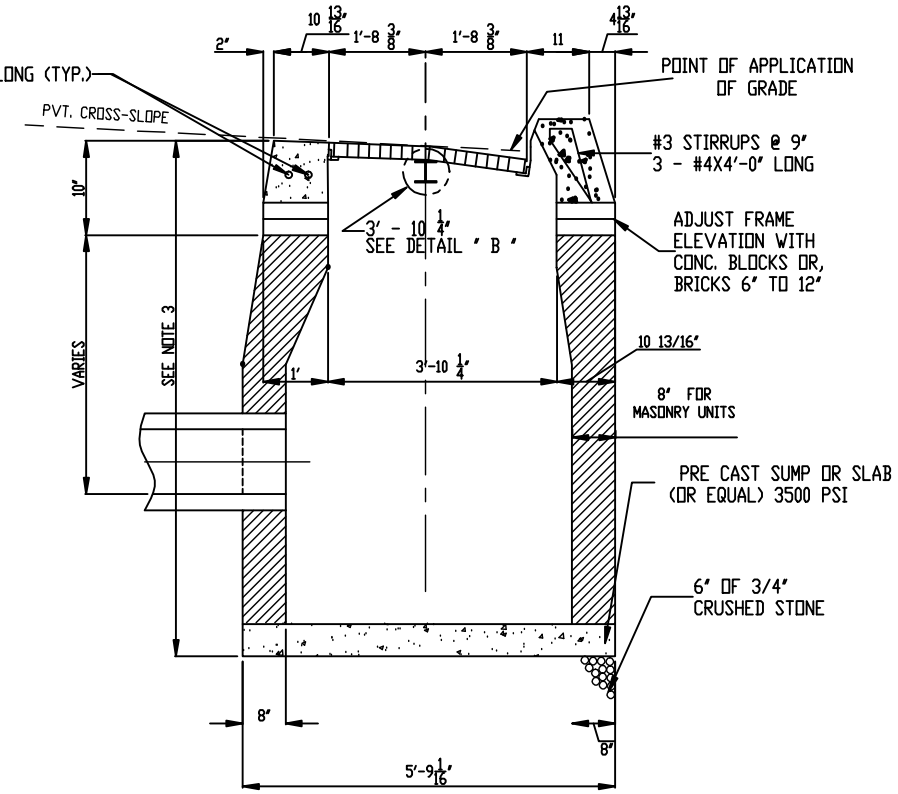

SIDE ELEVATION

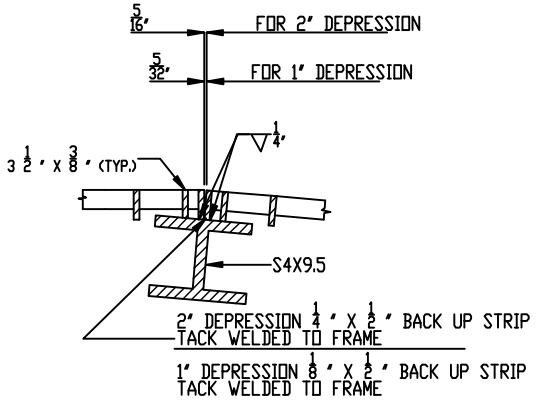

DETAIL "B"

NOTE:
USE C-L GRATE FOR A TYPE C-L DOUBLE GRATE BASIN

NOT TO SCALE

NOTES:

1. MINIMUM COVER OVER TOP OF PIPE SHALL BE 2'-0".
2. WALL THICKNESS SHALL BE SUFFICIENT TO MEET HS-20 LOADING.
3. WALL THICKNESS FOR STRUCTURES OVER 10' HIGH IS 12" FOR CONCRETE BLOCK UNITS. INSIDE DIMENSIONS REMAIN THE SAME.
4. ALL PIPES SHALL BE CUT FLUSH WITH INSIDE WALLS.
5. ALL BRICKS SHALL BE CONCRETE.
6. ALL PIPE PENETRATIONS SHALL BE PARGED SMOOTH TO PROVIDE A WATERTIGHT SEAL BOTH INSIDE AND OUTSIDE THE BASIN.
7. INSIDE WALLS OF STRUCTURE TO BE SMOOTH. NO SHELVES ALLOWED.
8. IF 4' SUMP IS NOT POSSIBLE DUE TO UTILITY CONFLICTS OR SITE CONSTRAINTS, A 2' SUMP MAY BE SUBMITTED FOR THE TOWN ENGINEERS APPROVAL.
9. FRAME AND GRATE SHALL BE GALVANIZED.

CDBASIN1.DWG